Genie®
A TEREX BRAND

Parts Manual

Serial Number Range

S-60 XC
from SN S60XCH-45010

S-65 XC
from SN S65XCH-45001

S-60 HF

S-65 HF

Part No. 1263377GT
Rev: A.05
June 2024

Technical Publications

Genie has endeavored to deliver the highest degree of accuracy possible. However, continuous improvement of our products is a Genie policy. Therefore, product specifications are subject to change without notice.

Readers are encouraged to notify Genie of errors and send in suggestions for improvement. All communications will be carefully considered for future printings of this and all other manuals.

Contact Us:

Internet: www.genielift.com
e-mail: awp.techpub@terex.com

Find a Manual for this Model

Go to http://www.genielift.com

Use the links to locate Operator's, Parts, Maintenance, and Service and Repair Manuals.

Copyright © 2018 by Terex South Dakota, Inc.

1263377GT Rev A.05 June 2024
Ninth Edition, First Printing

Genie is a registered trademark of Terex South Dakota, Inc. in the USA and many other countries. "S" is a trademark of Terex South Dakota, Inc.

Printed on recycled paper

Genie®
A TEREX BRAND

Model: S-65 XC
Serial number: S65XCH-45001
Model year: 2010 **Manufacture date:** 06/12/18
Electrical schematic number: E0396
Machine unladen weight: 20,736lbs / 9,406kg
Foam Tires add 764 lbs/347 kg to weight

Rated work load (including occupants): 500 lb / 227 kg
Maximum number of platfrm occupants: 2
Maximum allowable side force : 150 lb / 670 N
Maximum allowable inclination of the chassis:
Air Tires 2 deg / Foam Tires 4.5 deg
Maximum wind speed : 28 mph/ 12.5 m/s
Maximum platform height : 60 ft 2 in/ 18.3 m
Maximum platform reach : 50 ft 4 in/ 15.3 m
Gradeability: 45%
Country of manufacture: USA
This machine complies with:

Terex South Dakota
500 Oak Wood Road
PO Box 1150
Watertown, SD 57201
USA

PN - 77055

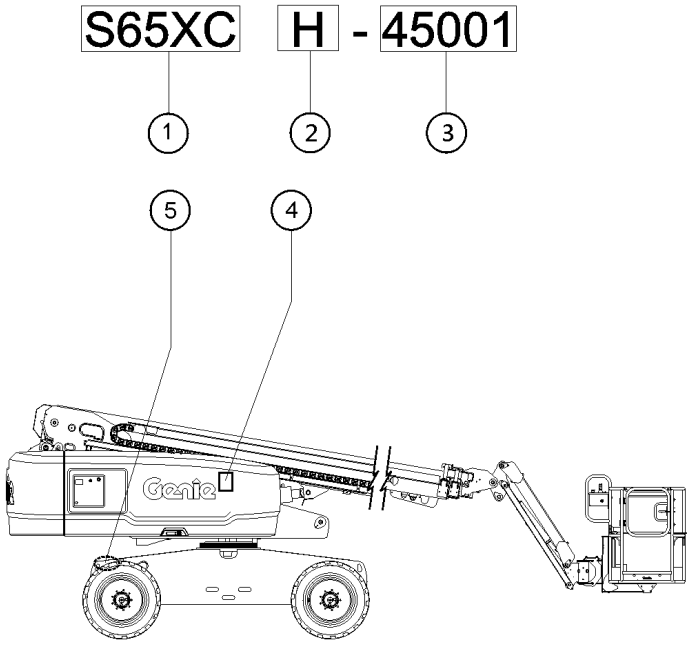

1 Model
2 Facility code
3 Sequence number
4 Serial label (located under cover)
5 Serial number (stamped on chassis)

How to Order Parts

Please be prepared with the following information when ordering replacement parts for your Terex or Genie product.

- ☒ **Machine model number**
- ☒ **Machine serial number**
- ☒ **Part number**
- ☒ **Part description and quantity**
- ☒ **Purchase order number**
- ☒ **"Ship to" address**
- ☒ **Desired method of shipment**
- ☒ **Name and telephone number of the authorized distributor in your area**

Use the Service Parts Fax Order Form on the next page and fax your order to our Parts Department.

If you don't know the name of your authorized distributor, or if your area is not currently serviced by an authorized distributor, please call Terex or Genie Industries.

Machine Information

_____

Model

_____

Serial Number

_____

Date of Purchase

_____

Authorized Genie Distributor

_____

Phone Number

North America

Telephone (425)881-1800

Toll Free (800)536-1800 in US and Canada

Fax (425)556-8659

Toll Free fax (888)274-6192

Email AWP.PartsSalesPO@terex.com

http://genielift.com/en

EMEAR (Europe, Middle East, Africa and Russia)

Telephone (31)(165)519 313

Fax (31)(165)511 148

http://genielift.co.uk

Asia Pacific (Genie Singapore)

Telephone +65 6692 7777

Fax +65 6261 8893

http://genielift.com.sg/

Australia

Telephone (61)(7)3456 4444

Fax (61)(7)3456 4466

http://genielift.com.au

South America

Telephone (55)(11)4082 5600

Fax (55)(11)4082 5630

Please refer to section 001 for the Recommended Spare Parts List.

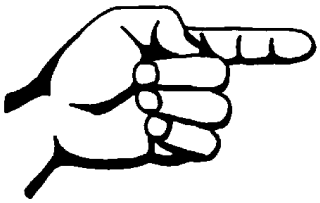

This page intentionally left blank.

TEREX CORPORATION

Service Parts Fax Order Form

Fax to: (425) 556-8659 or Toll Free: 888-274-6192
International: +1-425-556-8659

Please fill out completely

Date _____ Account Number _____

Your Name _____ Your Fax Number _____

_____ Your Phone Number _____

Bill To _____ Ship To _____

_____ _____

_____ _____

_____ _____

Purchase Order Number _____ Ship Via _____

Model(s) _____ **Serial No.(s)** _____

Optional Equipment _____

Part Number	Description	Quantity	Price

All back-ordered parts will be shipped when available via the same ship method as the original order unless Noted below:

- ☐ Ship complete order only - No back orders
- ☐ Ship all available parts and contact customer on disposition of back-ordered parts
- ☐ Other (please specify)

Description — Page

001 Parts Stocking List 12

001.1 Parts Stocking List 12

100 Decals 18

101.1 Decals with Words, Hydraulic Tank Side 18
102.1 Decals with Words, Chassis 22
103.1 Decals with Words, Engine Side 26
104.1 Decals with Words, Boom 28
105.1 Decals with Words, Platform 30
106.1 Decals with Symbols, Hydraulic Tank Side 34
107.1 Decals with Symbols, Chassis 38
108.1 Decals with Symbols, Engine Side 42
109.1 Decals with Symbols, Boom 44
110.1 Decals with Symbols, Platform 46

200 Drive Chassis Components 48

201.1 Steer End 48
202.1 Non-steer End 56
203.1 Oscillate Valve 62
204.1 TraX Option Steer End 64
205.1 TraX Option Non-steer End 66
206.1 TraX Option Components 70

300 Turntable Components 74

301.1 Tank Side - View 1 74
302.1 Tank Side - View 2 80
303.1 Tank Side - Diesel Fuel Tank Installation 86
304.1 Tank Side - Gasoline Fuel Tank Installation 88
305.1 Ground Control Box - External 92
306.1 Ground Control Box - Internal 94
307.1 Turntable Components and Swivel Drive Assembly 98
308.1 Turntable Covers - Hydraulic Tank Side 104
309.1_Turntable Covers - Engine Side 108
310.1 Wire Harness Diagram 112
310.101 Cable Boom S65XC 116
310.101A Cable Boom S60XC 118
310.102 Harness, Gbox, ALC600, Telematics 120
310.103 Harness PCON ALC600 124
310.103A Harness, Switch, PROX, PCON 126
310.104 Harness Joystick ALC600 128
310.105 Harness, PROX, Manifold, Plat 130

Description — Page

310.106 Harness, PROX Sensor, ACP 132
310.107 Harness, Plights, Work 134
310.108 Harness, Jib Select 136
310.109 Assembly, Foot Switch 138
310.110 Harness, Boom Sensor, GBOX 140
310.110A Harness Boom Sensor Gbox SD 142
310.111 Harness, Boom Sensor, Link 144
310.112 Harness, Drive Enable Limit Switch 146
310.112A Harness, LST10, S60/65XC 148
310.113 Harness, Boom Sensor, Boom 150
310.114 Harness, LST3S, Boom Down Limit Switch 152
310.114A Harness, LST3S, S60/65XC 154
310.115 Harness, LSB1RS 156
310.116 Harness, LSB2S 158
310.117 Harness S60/65XC Function, Manifold 160
310.118 Harness, S60/65XC Deutz 2.9 162
310.118A Harness, S60/65XC Engine Deutz TD 2011 166
310.118AA Harness S60/65XC Engine Deutz TD 2011 170
310.118B Harness, Engine, Ford MSG425 T4 174
310.118C Harness, Engine, Perkins 404D 176
310.118D Harness, Engine, Perkins CRDI 180
310.119 Harness, Lights, Drive 184
310.120 Harness, Beacons, Flashing 186
310.121 Harness, Oil Cooler, Lift Power 188
310.122 Harness, Batt2 To APU(+) 190
310.123 Harness, Batt2 To APU(-) 192
310.124 Cable, Battery, NEG, S60/65 194
310.124A Cable, Jumper, Ground, ENG 196
310.125 Battery Cable, Positive, RED 198
310.126 Harness, AC Power To Plat Jib 200
130.128 Harness, GND BATT 1 to BATT2 202
310.129 Harness 16GA Separator to GRD 204
310.130 Harness, GA BATT to Separatr 206
310.131 Harness, APU + to BATT2 208
310.132 Cable, Red 2/0, 20" 210
310.133 Cable ASSY, Red 2/0 212
310.134 Cable ASSY, Black 2/0 214

400 Manifolds and Pumps 216

401.1 Function Manifold, to SN S60XCH-45344 216
401.2 Function Manifold, from SN S60XCH-45345 222
402.1 Traction Manifold 228

Description **Page**

403.1 Pumps 232
404.1 Platform Rotate and Jib Boom/Platform Rotate Manifold 234
405.1 Generator Manifold 236
406.1 Platform Manifold, S-60 XC 238
407.1 Platform Manifold, S-65 XC 240

500 Engine Components 242

501.1 Deutz D2011L03i, View 1 242
502.1 Deutz D2011L03i, View 2 246
503.1 Ford MSG-425 EFI, View 1 250
504.1 Ford MSG-425 EFI, View 2 254
505.1 Ford MSG-425 EFI, View 3 258
506.1 Ford MSG-425 EFI, View 4 264
507.1 Deutz TD2011L04i, View 1 270
508.1 Deutz TD2011L04i, View 2 274
509.1 Deutz TD2011L04i, View 3 276
510.1 Deutz TD2011L04i, View 4 278
511.1 Deutz D2.9L4, View 1 280
512.1 Deutz D2.9L4, View 2 284
513.1 Deutz D2.9L4, View 3 286
514.1 Deutz D2.9L4, View 4 290
515.1 Deutz D2.9L4, View 5 294
516.1 Deutz 2.9L Turbo, View 1 298
517.1 Deutz 2.9L Turbo, View 2 302
518.1 Deutz 2.9L Turbo, View 3 306
519.1 Deutz 2.9L Turbo, View 4 308
520.1 Deutz 2.9L Turbo, View 5 310
521.1 Perkins 404D-22, View 1 314
522.1 Perkins 404D-22, View 2 318
523.1 Perkins 404D-22, View 3 322
524.1 Perkins 404D-22, View 4 324
525.1 Perkins 404F-E22T, View 1 326
526.1 Perkins 404F-E22T, View 2 330
527.1 Perkins 404F-E22T, View 3 334
528.1 Engine Tray 338

600 Boom Structure Components 342

601.1 Linkage Assembly - View 1 342
602.1 Linkage Assembly - View 2 346
603.1 Boom Components - View 1 348
604.1 Boom Components - View 2 354
605.1 Boom Components - View 3 358

Description — Page

606.1 Boom End Components, S-65 XC 362
607.1 Boom End Components, S-60 XC 368
608.1 Boom End Components, Load Sense 370
609.1 Cable Track 372

700 Platform Components 376

701.1 Platform Configuration 376
702.1 Platform Installation 378
703.1 Platform Control Box 382
704.1 Joysticks 386

800 Hydraulic Hose Routing and Fittings 388

801.1 Boom, S-60 XC 388
802.1 Boom, S-65 XC 390
803.1 Turntable Components 392
804.1 4WD Drive and Steer System 398
805.1 Oscillate System 402

900 Accessories 404

901.1 Drive Lights, Alarm and Beacon Packages 404
902.1 Platform Accessories 406
903.1 Half Mesh with Side Entry 408
904.1 Panel Cradle and Pipe Cradle 410
904.2 Panel Cradle Option 412
905.1 Platform Work Lights 414
906.1 Aircraft Protection Package, Standard Entry 416
907.1 Aircraft Protection Package, Swing Gate 420
908.1 Air Line and Power to Platform 424
909.1 Hostile Environment, Boom Wipers 426
910.1 Hostile Environment, Turntable Components 428
911.1 Hostile Environment, Cylinder Bellows and Cable Track 430
912.1 Hostile Environment, Ground and Platform Box Covers 432
913.1 Hostile Environment, Engine Air Pre-Cleaners 434
914.1 Welder Option, Chassis Components 436
915.1 Welder Option, Platform Components 440
916.1 3K Hydraulic Generator 444
917.1 Generator, Hoses and Fittings 448
918.1 Oil Cooler Components 450
919.1 2nd LP Tank Carrier 452
920.1 Tow Package 454
921.1 Fall Arrest Bar 456
922.1 Lift Guard Contact Alarm (to SN S65XCH-48083) 458

Description — Page

922.2 Gen II Contact Alarm Option (from SN S65XCH-48084) 462
923.1 Positive Air Shut off 464
924.1 Remote Charging 468
925.1 Telematics Option 470
926.1 Cold Start Package 472
927.1 Lift Tools Expo Installer 476
928.1 2nd Battery Option 478
929.1 Lift Tools Access Deck - 8 Feet (from SN S60XCH-45001) 480
930.1 Lift Tools Access Deck - 6 Feet (from SN S60XCH-45001) 484
931.1 Quickfit Oil Change System Ready (from SN S65XCH-48164) 488
932.1 Lift Guard White Noise Alarm 490
933.1 Access Manager Option 492

Part Number Index 494

001.1 Parts Stocking List

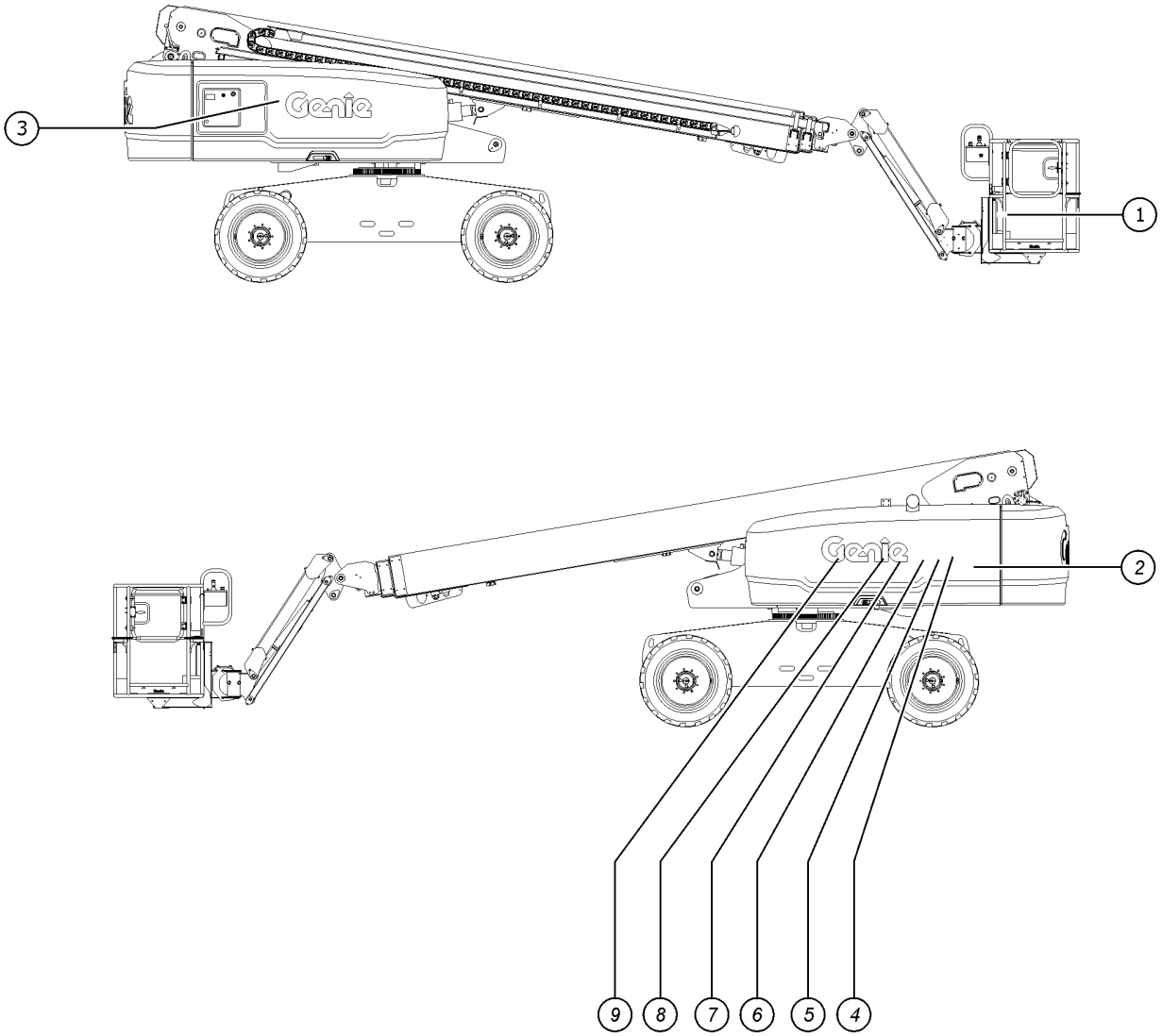

Item	Part No.	Description	Qty.
A		—Inspection Service Kits—	
A-	1278708GT	KIT,ENGINE SERVICE,250 HOUR,DEUTZ D2.9,,Z45/S40/S60/Z62/RT90 models with Deutz D2.9L4 engine	
A-	1278709GT	KIT,ENGINE SERVICE,250 HOUR,FDMSG425,Z45/S40/S60/Z62/RT90 models with Ford MSG425 engine	
A-			
B		—General Service Parts—	
B-	1484GT	PAINT, AEROSOL, BRIGHT BLUE*** 12-ounce spray paint	
B-	1268GT	PAINT, AEROSOL, GENIE GRAY*** 12-ounce spray paint	
B-	1258567GT	PAINT, AEROSOL, TRAFFIC BLACK 12-ounce spray paint	
B-	32150GT	PAINT, WET, GENIE BLUE (1 GL)** 1-gallon	
B-	32151GT	PAINT, WET, GENIE GRAY (1GL)** 1-gallon	
B-	1257733GT	PAINT, WET, TRAFFIC BLACK(1 GL)** 1-gallon	
B-	66399GT	GREASE, DIELECTRIC 4 OZ**	
B-	1283776GT	SEAL MARKER,CROSS CHECK,BLUE,TUBE	
B-	93500GT	PARKER DIGITAL PRESSURE GAUGE	
B-	49612GT	O-RING KIT (ORFS FITTINGS) O-ring kit, Parker	
B-	28750GT	O-RING KIT,FIELD SVC,ALL PROD* O-ring kit, SAE	
B-	33994GT	PLUG AND CAP KIT-SERVICE,37?** Plug and cap kit, SAE	
1		—Manuals—	
1-	27581GT	MANUAL, SAFTY MANNAL	
1-	1298933GT	MANUAL, SAIA MANUAL OF RESPONSIBILITIES, MEWP	
		—HYD Filters—	
2	60857GT	FILTER,ELEMENT,BETA(5)=1000 (refer to figure 309.1)	
3	88917GT	FILTER,ELEMENT,BETA(10)=200 (refer to figure 301.1)	
3-	1282117GT	FILTER,ELEMENT,HYD TANK,RETURN (refer to figure 301.1)	
4		—Perkins 404D-22 Models—	

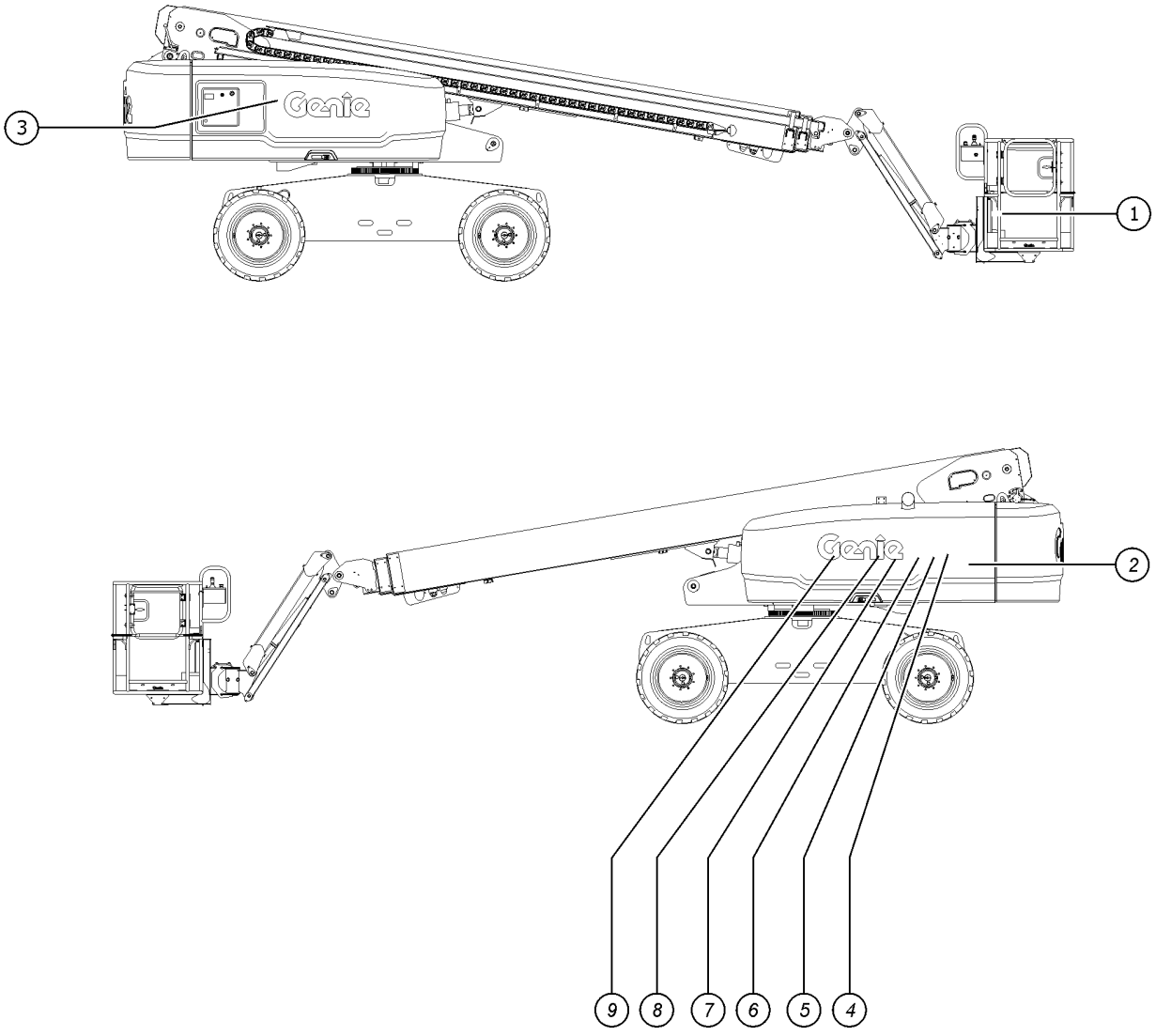
3
1
2
9
8
7
6
5
4

Item	Part No.	Description	Qty.
4-	62420GT	FILTER, AIR D2.9L4 Perkins 404D-22 Models (refer to 521.1)	
4-	62433GT	FILTER,ELEMENT,30 MIC,75020 Perkins 404D-22 Models (refer to 521.1)	
4-	94762GT	OIL FILTER - PERKINS Perkins 404D-22 Models (refer to 521.1)	
4-	89765GT	BELT, V (PERKINS 404) Perkins 404D-22 Models (refer to 521.1)	
4-	62421GT	FILTER,FUEL,PERKINS Perkins 404D-22 Models (refer to 521.1)	
5		—Perkins 404F-22 Models—	
5-	62420GT	FILTER, AIR D2.9L4 Perkins 404F-22 Models (refer to 525.1)	
5-	62433GT	FILTER,ELEMENT,30 MIC,75020 Perkins 404F-22 Models (refer to 527.1)	
5-	94762GT	OIL FILTER - PERKINS Perkins 404F-22 Models (refer to 525.1)	
5-	89765GT	BELT, V (PERKINS 404) Perkins 404F-22 Models (refer to 525.1)	
5-	1262487GT	BELT,AIR PUMP,PERKINS 404F-22T Perkins 404F-22 Models (refer to 525.1)	
5-	1291205GT	FILTER, PRIMARY, FUEL, PERKINS Perkins 404F-22 Models (refer to 526.1)	
6		—Deutz TD2011-L03i Models—	
6-	62420GT	FILTER, AIR D2.9L4 Deutz TD2011-L03i Models (refer to 501.1)	
6-	29560GT	FILTER,FUEL/WTR SEP, DTZ 1008 Deutz TD2011-L03i Models (refer to 501.1)	
6-	49924GT	FILTER,OIL,DEUTZ Deutz TD2011-L03i Models (refer to 501.1)	
6-	32698GT	BELT Deutz TD2011-L03i Models (refer to 501.1)	
7		—Deutz TD2011-L04i Models—	
7-	62425GT	FILTER,AIR CLEANER, SUPERBOOM Deutz TD2011-L04i Models (refer to 507.1)	
7-	29560GT	FILTER,FUEL/WTR SEP, DTZ 1008 Deutz TD2011-L04i Models (refer to 507.1)	
7-	49924GT	FILTER,OIL,DEUTZ Deutz TD2011-L04i Models (refer to 507.1)	
7-	58630GT	V-BELT, DEUTZ TD2011LOAI Deutz TD2011-L04i Models (refer to 507.1)	

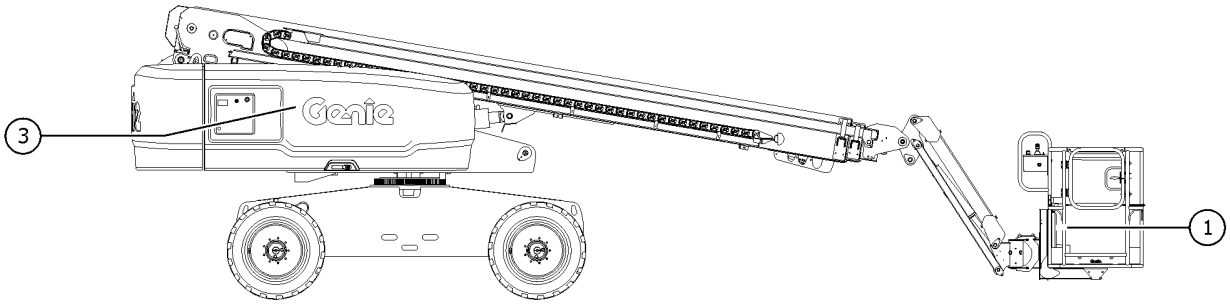
3
1

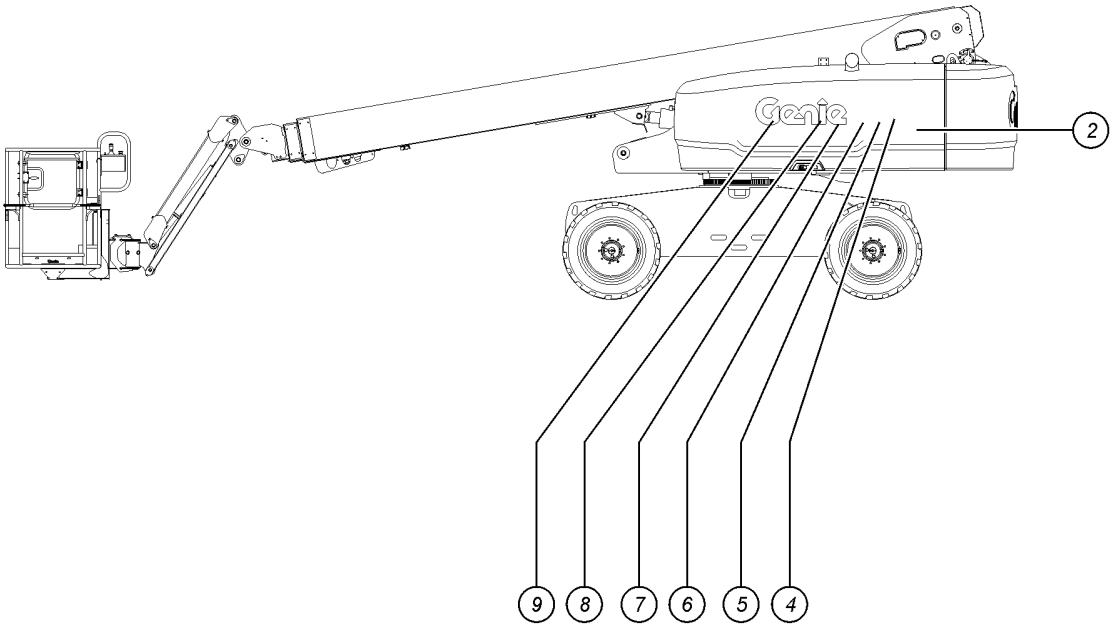
2
9
8
7
6
5
4

Item	Part No.	Description	Qty.
8		—Deutz D2.9L4 Models—	
8-	62420GT	FILTER, AIR D2.9L4 Deutz D2.9L4 Models (refer to 511.1)	
8-	214228GT	FILTER, DEUTZ 2.9, FUEL Deutz D2.9L4 Models (refer to 511.1)	
8-	236260GT	FILTER, FUEL PRE-FILTER, SPIN-ON, DEUTZ Deutz D2.9L4 Models (refer to 511.1)	
8-	49924GT	FILTER,OIL,DEUTZ Deutz D2.9L4 Models (refer to 511.1)	
8-	1262866GT	FAN BELT, ALTERANTOR Deutz D2.9L4 Models (refer to 511.1)	
8-	1262487GT	BELT,AIR PUMP,PERKINS 404F-22T Deutz D2.9L4 Models (refer to 511.1)	
9		—Deutz D2.9L4 Turbo Models—	
9-	62425GT	FILTER,AIR CLEANER, SUPERBOOM Deutz D2.9L4 Turbo Models (refer to 516.1)	
9-	49924GT	FILTER,OIL,DEUTZ Deutz D2.9L4 Turbo Models (refer to 516.1)	
9-	214228GT	FILTER, DEUTZ 2.9, FUEL Deutz D2.9L4 Turbo Models (refer to 516.1)	
9-	236259GT	LIFT PUMP,FUEL,DEUTZ TCD3.6 Deutz D2.9L4 Turbo Models (refer to 516.1)	
9-	236260GT	FILTER, FUEL PRE-FILTER, SPIN-ON, DEUTZ Deutz D2.9L4 Turbo Models (refer to 516.1)	
9-	1262866GT	FAN BELT, ALTERANTOR Deutz D2.9L4 Turbo Models (refer to 516.1)	
9-	1262867GT	V-BELT, DEUTZ Deutz D2.9L4 Turbo Models (refer to 516.1)	
10		—Ford DSG-425 EFI Models—	
10-	1272019GT	FILTER, FUEL Ford DSG-425 EFI Models (refer to 503.1)	1
10-	119139GT	OIL FILTER,DSG-423 Ford DSG-425 EFI Models (refer to 503.1)	
10-	77295GT	FILTER ELEMENT,AIR,NOLFF LPG Ford DSG-425 EFI Models (refer to 503.1)	
10-	215274GT	FAN DRIVE BELT, MSG425 Ford DSG-425 EFI Models (refer to 503.1)	
10-	119474GT	VALVE,PCV FORD DSG-423 Ford DSG-425 EFI Models (refer to 503.1)	
10-	215287GT	SPARK PLUG, MSG425 Ford DSG-425 EFI Models (refer to 503.1)	

101.1 Decals with Words, Hydraulic Tank Side

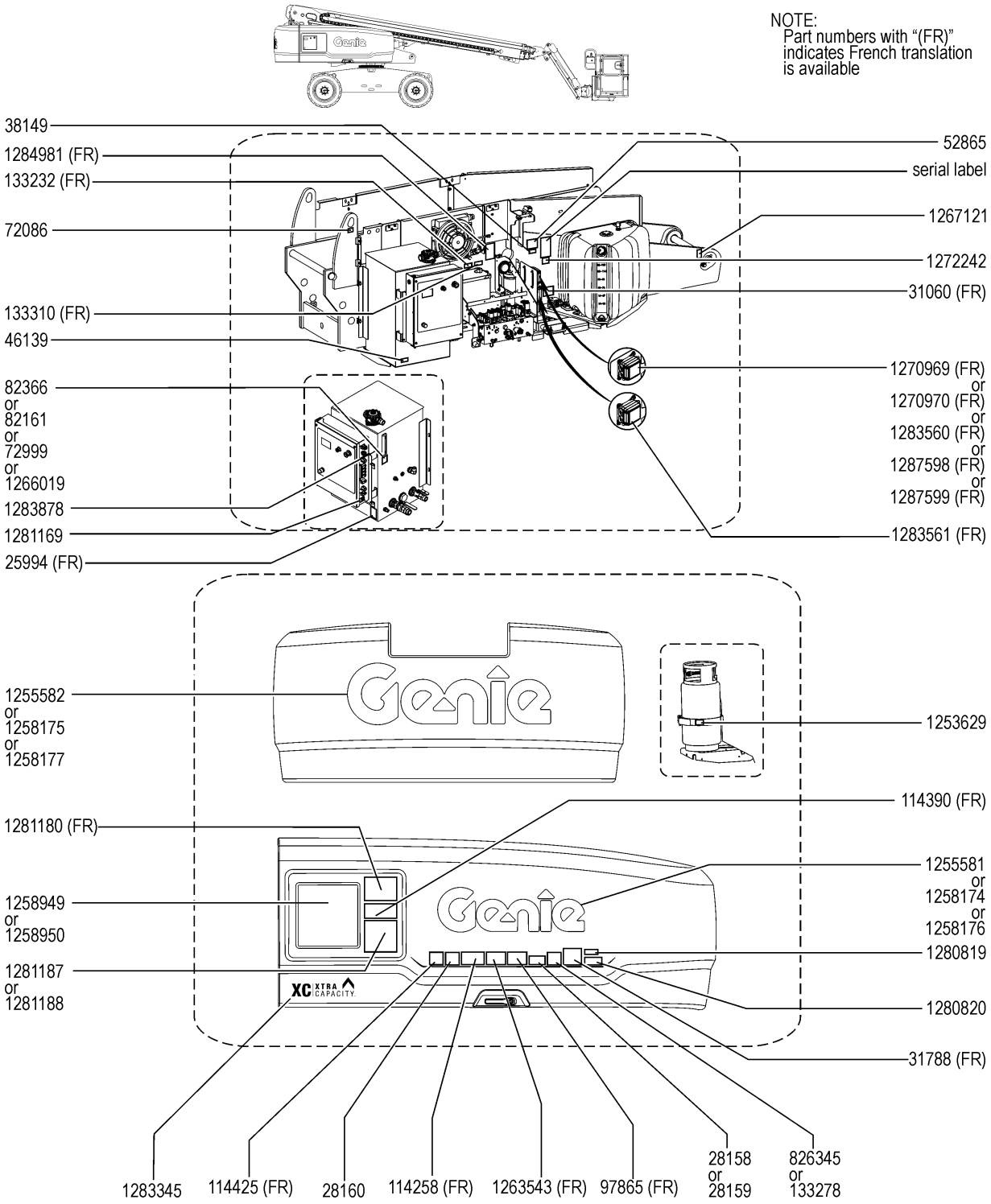

101.1 Decals with Words, Hydraulic Tank Side

Item	Part No.	Description	Qty.
1	25994GT	DECAL,NOTICE,SHUTOFF VALVES	1
2	28158GT	DECAL,LABEL,UNLEADED GAS ONLY Option, fuel	1
3	28159GT	DECAL,DIESEL Option, fuel	1
4	28160GT	DECAL,LABEL,LIQUID PROPANE Option, LPG Tank	1
5	31060GT	DECAL,DANGER DO NOT ALTER SWTC	1
6	31788GT	DECAL,DANGER,BATTERY SAFETY***	1
7	38149GT	DECAL,LABEL,PATENTS US Only	1
8	46139GT	L,NAMEPLT,USE UNDERWRITE LAB Option, LP Tank	1
9	52865GT	DECAL,ANNUAL INSP***	1
10	72086GT	DECAL,LABEL,LIFTING EYE	1
11	72999GT	DECAL,LABEL,PETRO CANADA*** Option, hydraulic oil	1
12	82161GT	DECAL,LABEL,UCON HYDROLUBE Option, hydraulic oil	1
13	82366GT	DECAL,CHEVRON RANDO HD Option, hydraulic oil	1
14	97865GT	DECAL,WARN,ELECTRO HAZARD	1
15	114258GT	DECAL,DANGER,NO SMOKING	1
16	114390GT	DECAL,DANGER,ELECT HAZARD***	1
17	114425GT	DECAL,BATTERY DISCONNECT Option, LPS	1
18	133232GT	DECAL,LABEL,AUX BATTERY	1
19	133278GT	DECAL,LOW/ULTRA LOW SULFR FUEL diesel models only	1
20	133310GT	DECAL,LABEL,ENG STRT& CONTROLS	1
21	826345GT	DECAL,ULS DIESEL ONLY,TIER 4 Tier 4	1
22	1253629GT	DECAL,LP BOTTLE,S60 Option, LP bottle	1
23	1255581GT	DECAL COSMETIC,10" GENIE BLUE	1
24	1255582GT	DECAL COSMETIC,15" GENIE BLUE	1
25	1258174GT	DECAL COSMETIC,10" GENIE WHITE	1
26	1258175GT	DECAL COSMETIC,15" GENIE WHITE	1
27	1258176GT	DECAL COSMETIC,10" GENIE BLACK	1
28	1258177GT	DECAL COSMETIC,15" GENIE BLACK	1

101.1 Decals with Words, Hydraulic Tank Side

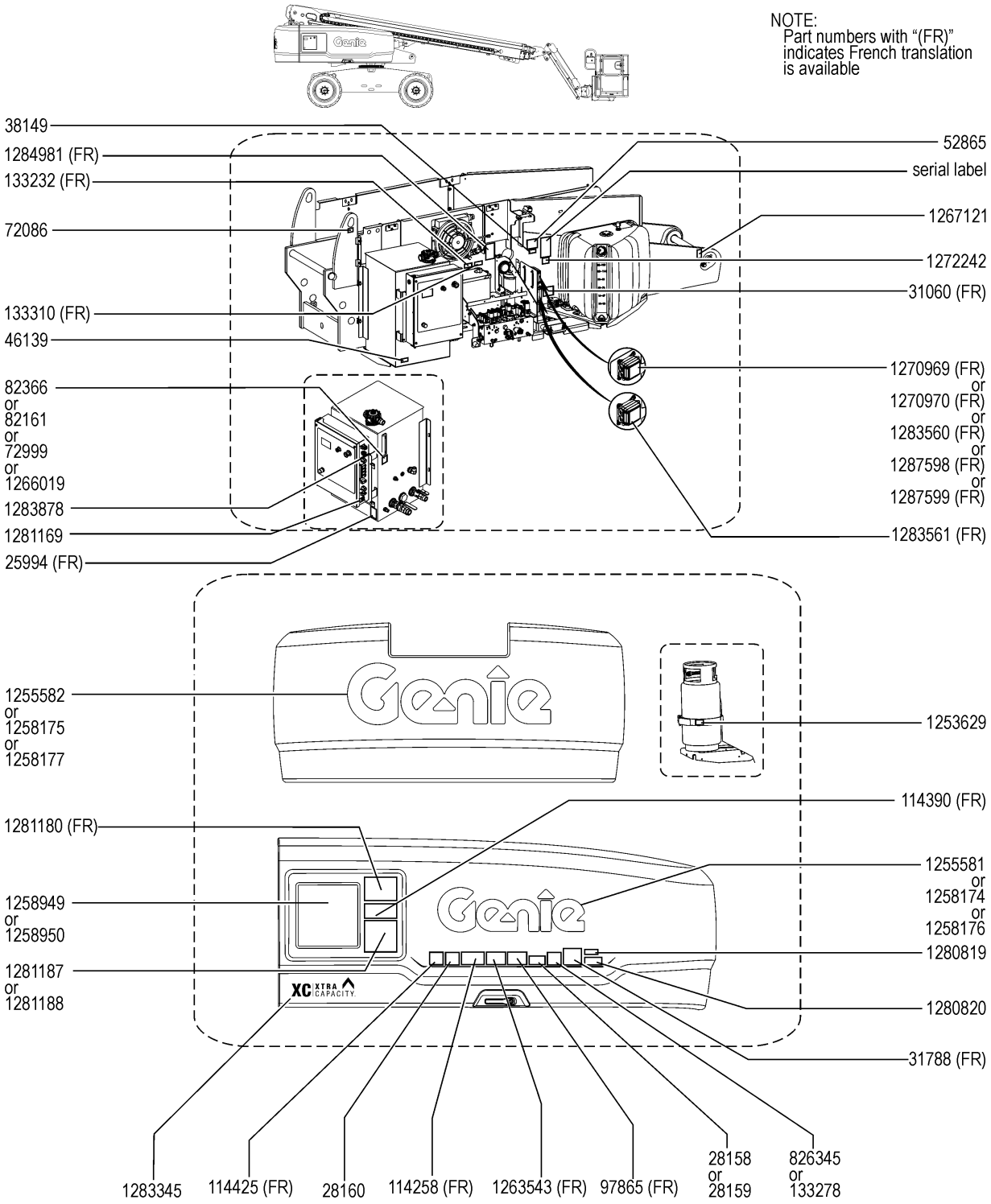

Item	Part No.	Description	Qty.
29	1258949GT	OVERLAY GROUND CONTROLS S-BOOM JIB S-65 XC, S-65 TRAX	1
29B	1286638GT	KIT,GBOX OVERLAY,ALC600,S-BOOMS,JIB S-65 XC, S-65 TRAX (includes 1258949)	
30	1258950GT	OVERLAY GROUND CONTROLS S-BOOM S-60 XC, S-60 TRAX	1
30B	1286637GT	KIT,GBOX OVERLAY,ALC600,S-BOOMS S-60 XC, S-60 TRAX (includes 1258950)	
31	1263543GT	DECAL,COMPARTMENT ACCESS	1
32	1266019GT	DECAL, LABEL, SHELL TELLUS Option, hydraulic oil	1
33	1267121GT	DECAL,WARNING,CRUSH HAZARD	1
34	1270969GT	DECAL, VEC, DEUTZ2.9T, S80 Deutz 2.9	1
35	1270970GT	DECAL, VEC, DEUTZ2011T, S80 Deutz 2011	1
36	1272242GT	DECAL,MACHINE REGISTRATION/OWN	1
37	1280819GT	DECAL,WARNING,CANCER AND REPRODUCTIVE HARM, PROP 65 US only	1
38	1280820GT	DECAL,FUEL,DIESEL EXHAUST, PROP 65 US only	1
39	1281169GT	DECAL,RECOVERY SWITCH	1
40	1281180GT	DECAL,OPERATING INSTRUCTIONS	1
41	1281187GT	DECAL,EMERGENCY LOWERING,S-80 XC S-60 XC, S-60 TRAX	1
42	1281188GT	DECAL,EMERGENCY LOWERING S-65 XC, S-65 TRAX	1
43	1283345GT	DECAL, COVER, XC XTRA CAPACITY	1
44	1283560GT	DECAL, VEC 1, PERKINS 404F-E22TI, S60/65XC Perkins 404F-E22T	1
45	1283561GT	DECAL, VEC 2, PERKINS 404F-E22TI, S60/65XC Perkins 404F-E22T	1
46	1283878GT	DECAL, TECHPRO LINK	1
47	1284981GT	DECAL,ACCUMULATOR EXPLOSION HAZARD,WORD	1
48	1287598GT	DECAL, VEC, PERKINS404D, S60/65XC Perkins 404D-22	1
49	1287599GT	DECAL, VEC, FORD MSG425, S60/65XC Ford MSG-425	1

102.1 Decals with Words, Chassis

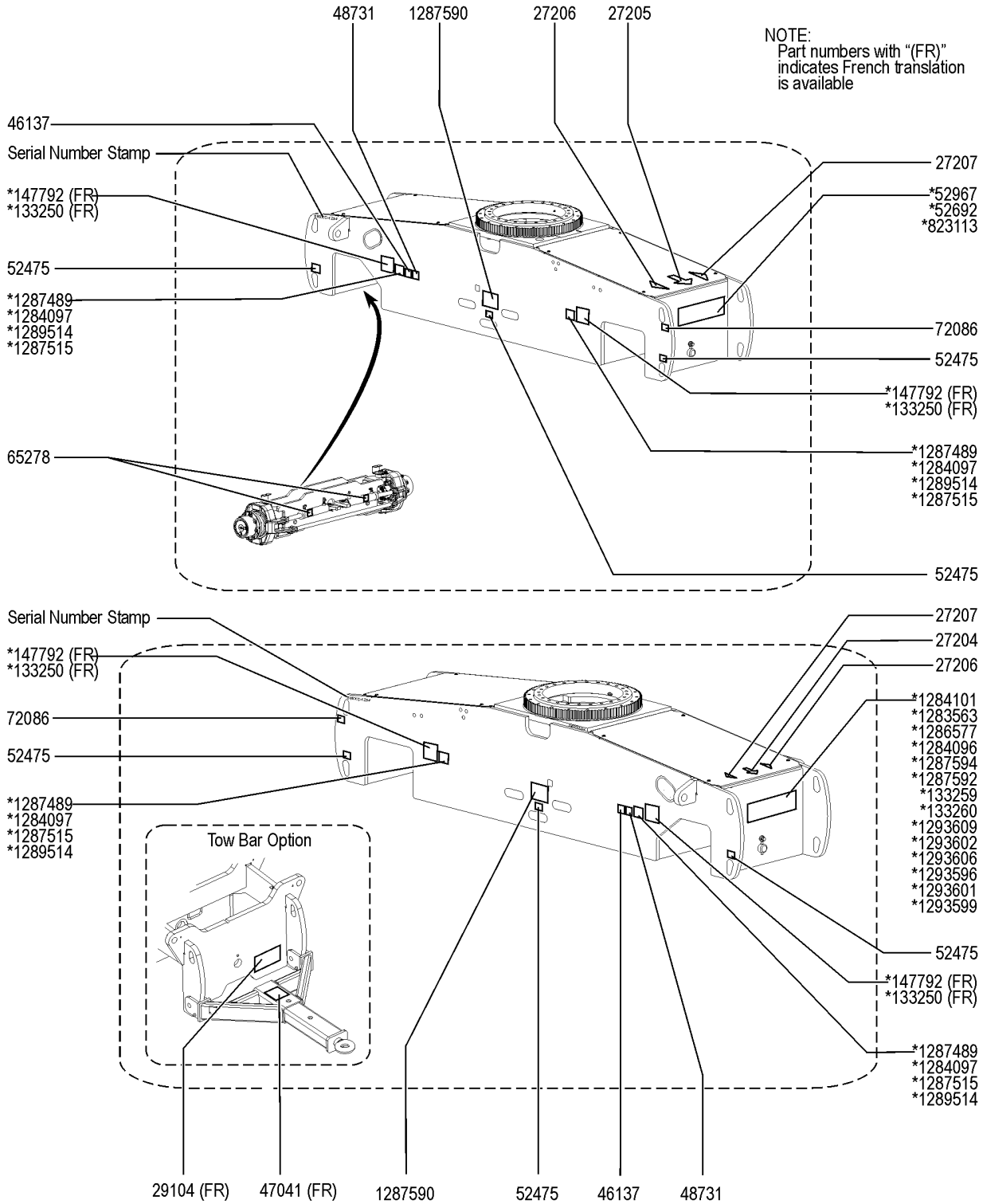

Item	Part No.	Description	Qty.
		*These decals are model, option or configuration specific.	
1	27204GT	DECAL,ARROW BLUE	1
3	27206GT	DECAL,TRIANGLE,BLUE	2
4	27207GT	DECAL,TRIANGLE,YELLOW	2
5	29104GT	DECAL,TOWING INSTRUCTIONS Option, tow	1
6	46137GT	DECAL,LPS (4"X4")	2
7	47041GT	DECAL,CAUTION,TOWING SPEED Option, tow	1
8	48731GT	DECAL,LABEL,FMRC APPROVED	2
9	52475GT	DECAL,LABEL,TRANSPORT TIEDOWN*	6
10	52692GT	DECAL,COSMETIC,4X4 BLUE	1
11	52967GT	DECAL,COSMETIC,4 X 4	1
12	65278GT	DECAL,CAUTION,NO STEP	2
13	72086GT	DECAL,LABEL,LIFTING EYE	2
14	133250GT	DECAL,DANGER TIP OVER TRAX S-60 TRAX, S-65 TRAX	4
14B	1323451GT	DECAL,DANGER TIP OVER TRAX S-60 TRAX, S-65 TRAX	4
15	133259GT	DECAL,COSM, S60 TRAX S-60 TRAX	1
16	133260GT	DECAL,COSM, S65 TRAX S-65 TRAX	1
17	147792GT	DANGER,TIPOVR,TIRES FF ONLY S-60 XC, S-65 XC	4
18	823113GT	DECAL,COSM,4X4,BLACK	1
19	1283563GT	DECAL, CHASSIS, S-60 XC, BLUE S-60 XC	1
20	1284096GT	DECAL, CHASSIS, S-65 XC S-65 XC	1
21	1284097GT	DECAL,LABEL,WHEEL LOAD S65 XC S-65 XC	4
22	1284101GT	DECAL, CHASSIS, S-60 XC S-60 XC	1
23	1286577GT	DECAL, CHASSIS, S-60 XC, BLK S-60 XC	1
24	1287489GT	DECAL,LABEL,WHEEL LOAD S60 XC S-60 XC	4
25	1287515GT	DECAL, WHEEL LOAD S65 TRAX S-65 TRAX	4
25B	1323455GT	DECAL, WHEEL LOAD S65XC TRAX S-65 TRAX	4
26	1287590GT	DECAL, TRANSPORT/LIFTING, S-60/65XC	2

102.1 Decals with Words, Chassis

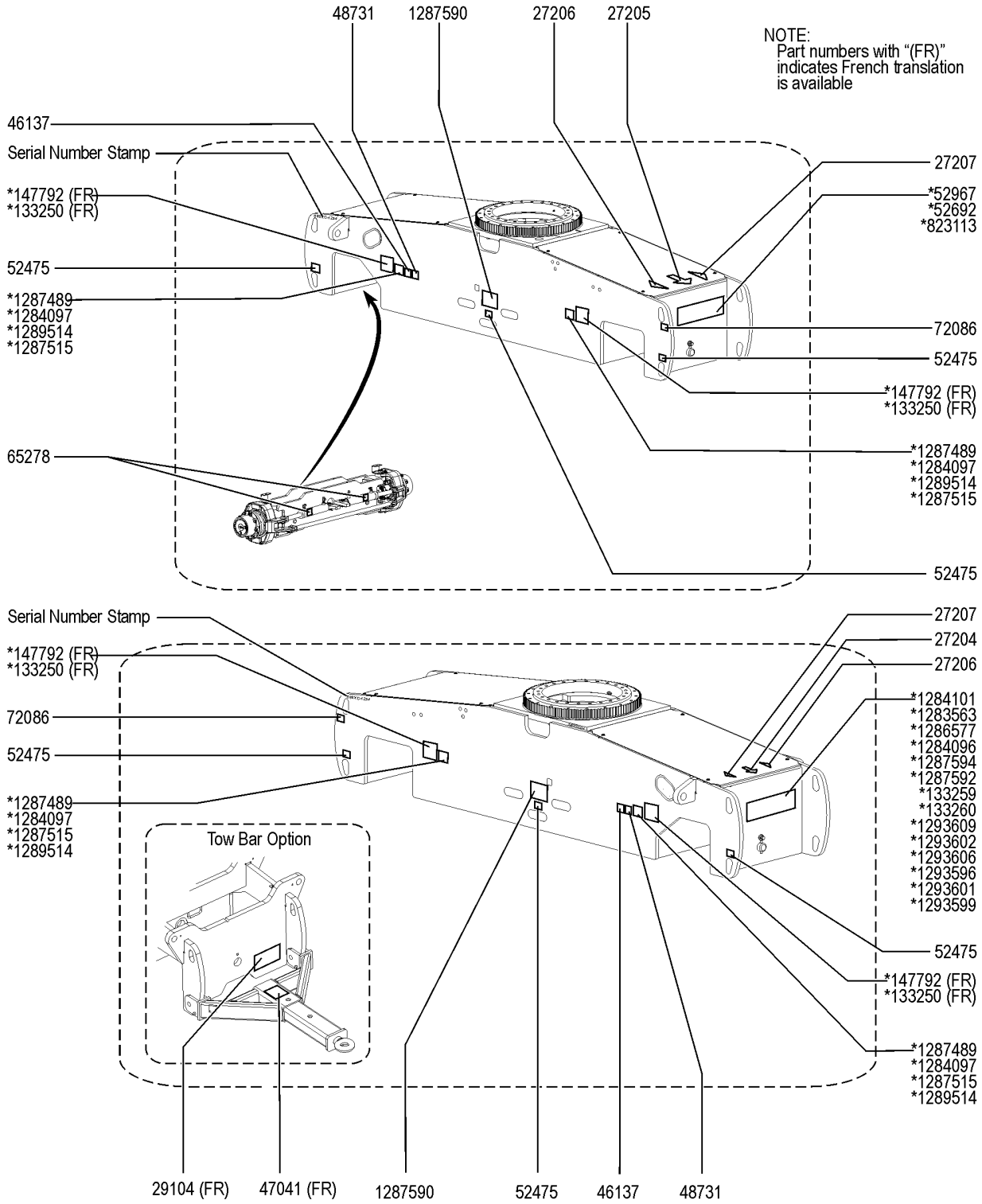

Item	*Part No.*	*Description*	*Qty.*
27	1287592GT	DECAL, CHASSIS, S-65 XC, BLK S-65 XC	1
28	1287594GT	DECAL, CHASSIS, S-65 XC, BLUE S-65 XC	1
29	1289514GT	DECAL, WHEEL LOAD S60XC TRAX S-60 TRAX	4
29B	1323454GT	DECAL, WHEEL LOAD S60XC TRAX S-60 TRAX	4
30	1293596GT	DECAL, CHASSIS, S-65 HF	1
31	1293599GT	DECAL, CHASSIS, S-65 HF, BLK	1
32	1293601GT	DECAL, CHASSIS, S-65 HF, BLUE	1
33	1293602GT	DECAL, CHASSIS, S-60 HF, BLUE	1
34	1293606GT	DECAL, CHASSIS, S-60 HF, BLK	1
35	1293609GT	DECAL, CHASSIS, S-60 HF	1

103.1 Decals with Words, Engine Side

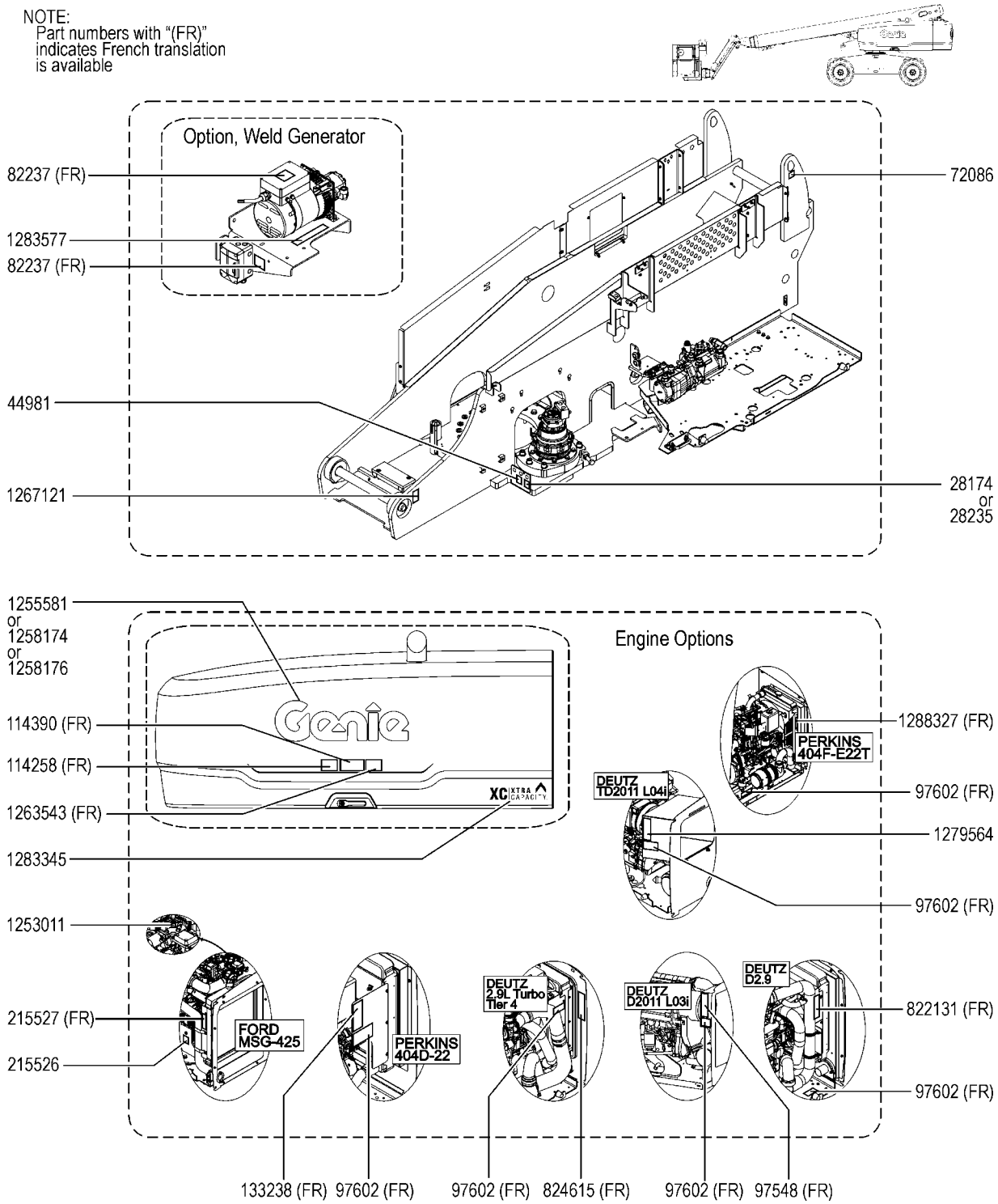

103.1 Decals with Words, Engine Side

Item	Part No.	Description	Qty.
1	28174GT	DECAL,POWER TO PLATFORM 230V	1
2	28235GT	DECAL,POWER TO PLATFORM 115V	1
3	44981GT	DECAL,LABEL,AIRLINE 110 PSI Option, airline to plat	1
4	72086GT	DECAL,LABEL,LIFTING EYE	1
5	82237GT	DECAL,DANGER,HIGH VOLTAGE Option, Weld Generator	2
6	97548GT	DECAL,ENGINE SPEC,DEUTZ 2011 Deutz D2011L03i	1
7	97602GT	DECAL,EXPLOSION HAZARD	1
8	114258GT	DECAL,DANGER,NO SMOKING	1
9	114390GT	DECAL,DANGER,ELECT HAZARD***	1
10	133238GT	DECAL,ENGINE SPEC,PERKINS*** Perkins 404D-22	1
11	215526GT	DECAL,LABEL,BELT,MSG425 Ford MSG-425	1
12	215527GT	DECAL,FORD ENGINE SPEC MSG425 Ford MSG-425	1
13	822131GT	DECAL, ENGINE SPEC, D2.9 Deutz D2.9	1
14	824615GT	DECAL,ENGINE SPEC,DEUTZ TD2.9 Deutz 2.9L turbo	1
15	1253011GT	DECAL, VAPORIZER PRESSURE Option, LP	1
16	1255581GT	DECAL COSMETIC,10" GENIE BLUE	1
17	1258174GT	DECAL COSMETIC,10" GENIE WHITE	1
18	1258176GT	DECAL COSMETIC,10" GENIE BLACK	1
19	1263543GT	DECAL,COMPARTMENT ACCESS	1
20	1267121GT	DECAL,WARNING,CRUSH HAZARD	1
21	1279564GT	DECAL,ENGINE SPEC,DEUTZ,TD2011 Deutz TD2011L04i	1
22	1283345GT	DECAL, COVER, XC XTRA CAPACITY	1
23	1283577GT	DECAL, LIFT^POWER, 1X7 INCH Option, welder	1
24	1288327GT	DECAL,ENGINE SPEC,404F-E22T Perkins 404F-E22T	1

104.1 Decals with Words, Boom

NOTE:
Part numbers with "(FR)" indicates French translation is available

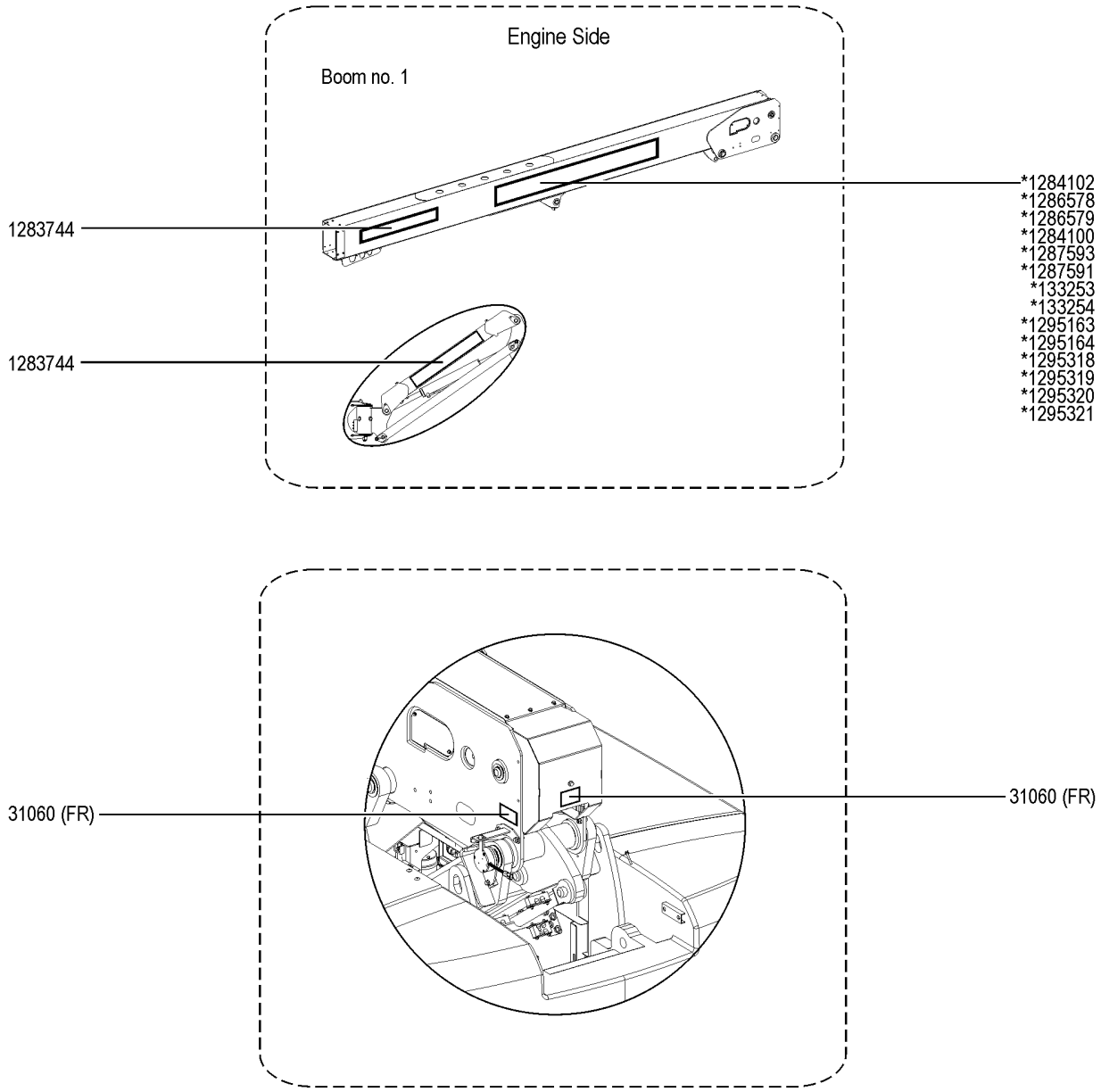

104.1 Decals with Words, Boom

Item	Part No.	Description	Qty.
		*These decals are model, option or configuration specific.	
1	31060GT	DECAL,DANGER DO NOT ALTER SWTC	2
2	133253GT	DECAL,COSM,GENIE S60 TRAX	1
3	133254GT	DECAL, COSM,GENIE S65 TRAX	1
4	1283744GT	DECAL, LIFT^POWER Option, Lift Power	1
5	1284100GT	DECAL, BOOM, GENIE S-65 XC	1
6	1284102GT	DECAL, BOOM, GENIE S-60XC	1
7	1286578GT	DECAL, BOOM, GENIE S-60 XC, BLUE	1
8	1286579GT	DECAL, BOOM, GENIE S-60 XC, BLK	1
9	1287591GT	DECAL, BOOM, GENIE S-65 XC, BLK	1
10	1287593GT	DECAL, BOOM, GENIE S-65 XC, BLUE	1
11	1295163GT	DECAL, BOOM, S-65 HF	1
12	1295164GT	DECAL, BOOM, S-60 HF	1
13	1295318GT	DECAL,BOOM,S-65HF,BLUE	1
14	1295319GT	DECAL,BOOM,S-65HF,BLACK	1
15	1295320GT	DECAL,BOOM,S-60HF,BLUE	1
16	1295321GT	DECAL,BOOM,S-60HF,BLACK	1

105.1 Decals with Words, Platform

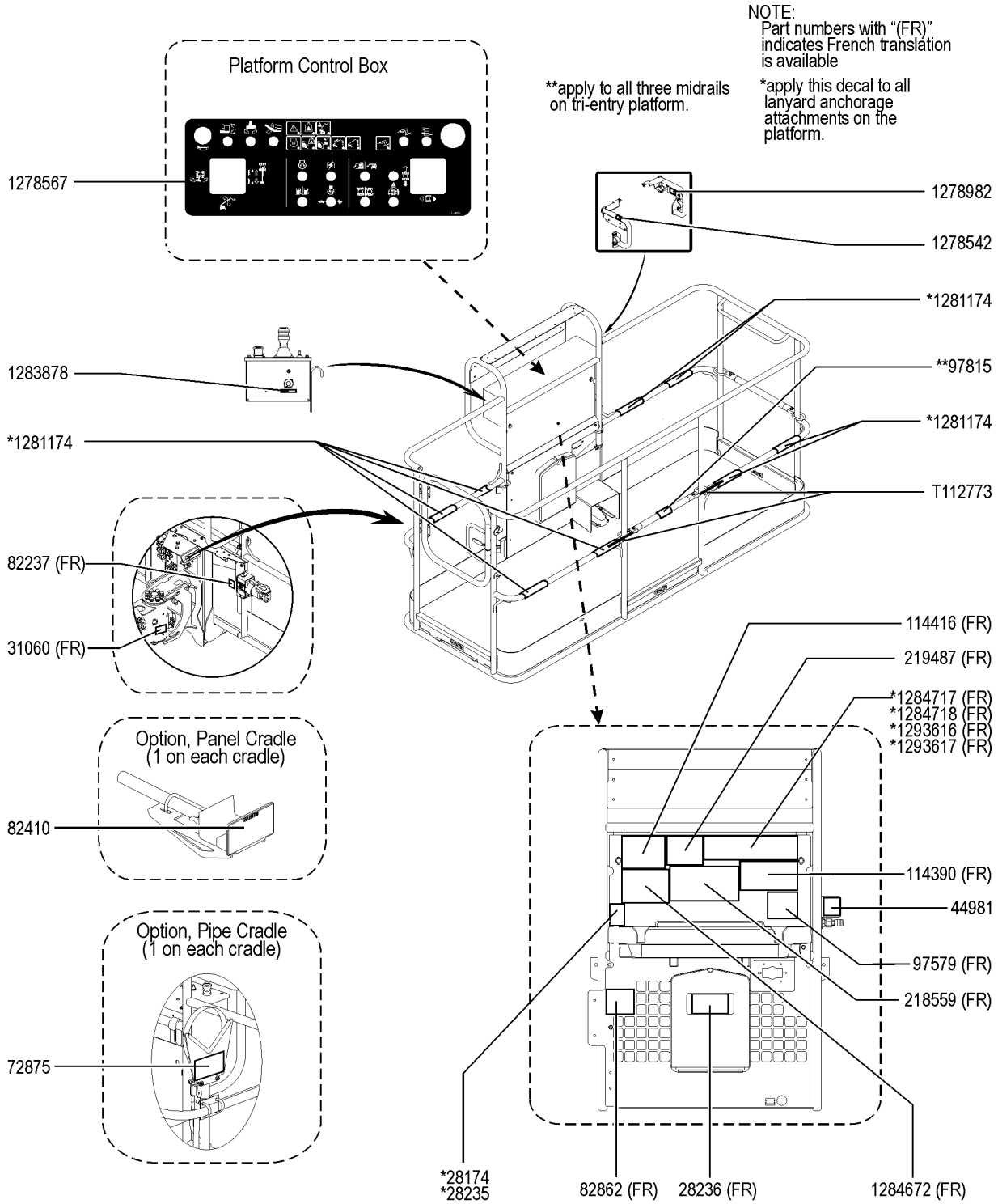

Item	Part No.	Description	Qty.
		*These decals are model, option or configuration specific.	
A	1296522GT	DECAL KIT,PLAT S-60/65 XC,WORD	
1	28174GT	DECAL,POWER TO PLATFORM 230V	1
2	28235GT	DECAL,POWER TO PLATFORM 115V	1
3	28236GT	DECAL,WARN,IMPROPER OPERATION	1
4	31060GT	DECAL,DANGER DO NOT ALTER SWTC	1
5	44981GT	DECAL,LABEL,AIRLINE 110 PSI Option, airline to plat	1
6	72875GT	DECAL,WARNING,PIPE CRADLE,BOOM Option, pipe cradle	2
7	82237GT	DECAL,DANGER,HIGH VOLTAGE Option, welder	1
8	82410GT	DECAL,WARNING,PANEL CRADLE Option, panel cradle	2
9	82862GT	DECAL,FIRE EXTINGUISHER Option, welder	1
10	97579GT	DECAL,DANGER,TIP-OVER,WELDER** Option, welder	1
11	97815GT	DECAL,LABEL,LOWER MIDRAIL	1
12	114390GT	DECAL,DANGER,ELECT HAZARD***	1
13	114416GT	DECAL,DANGER,TIPOVER,TILT	1
14	218559GT	DECAL,DANGER/WARNING COMBO	1
15	219487GT	DECAL,PLATFORM OVERLOAD	1
16	1278542GT	DECAL, INSTRUCTION, CONTACT ALARM	1
17	1278567GT	OVERLAY,PLATFORM CONTROLS,S-BOOM,XC	1
17-	1282361GT	DECAL,PROTECTOR,CLEAR,S-80/85 XC Sold separately. Compatible with p/n 1278567GT.	
18	1278982GT	DECAL, INSTRUCTION, ACTUATOR SWITCH SOCKET	1
19	1281174GT	DECAL,LANYARD,FALL ARREST/FALL RESTRAINED	8
20	1283878GT	DECAL, TECHPRO LINK	1
21	1284672GT	DECAL, WARNING, RUNAWAY MACHINE, S-60/65 XC WORD	1
22	1284717GT	DECAL, DANGER, CAPACITY S-60 XC, ANSI WORD S-60 XC, S-60 TRAX	1
23	1284718GT	DECAL, DANGER, CAPACITY S-65 XC, ANSI WORD S-65 XC, S-65 TRAX	1
24	1293616GT	DECAL,DANGER,CAPICITY S-65 HF,SYMBOL	1
25	1293617GT	DECAL,DANGER,CAPICITY S-60 HF,SYMBOL	1

105.1 Decals with Words, Platform

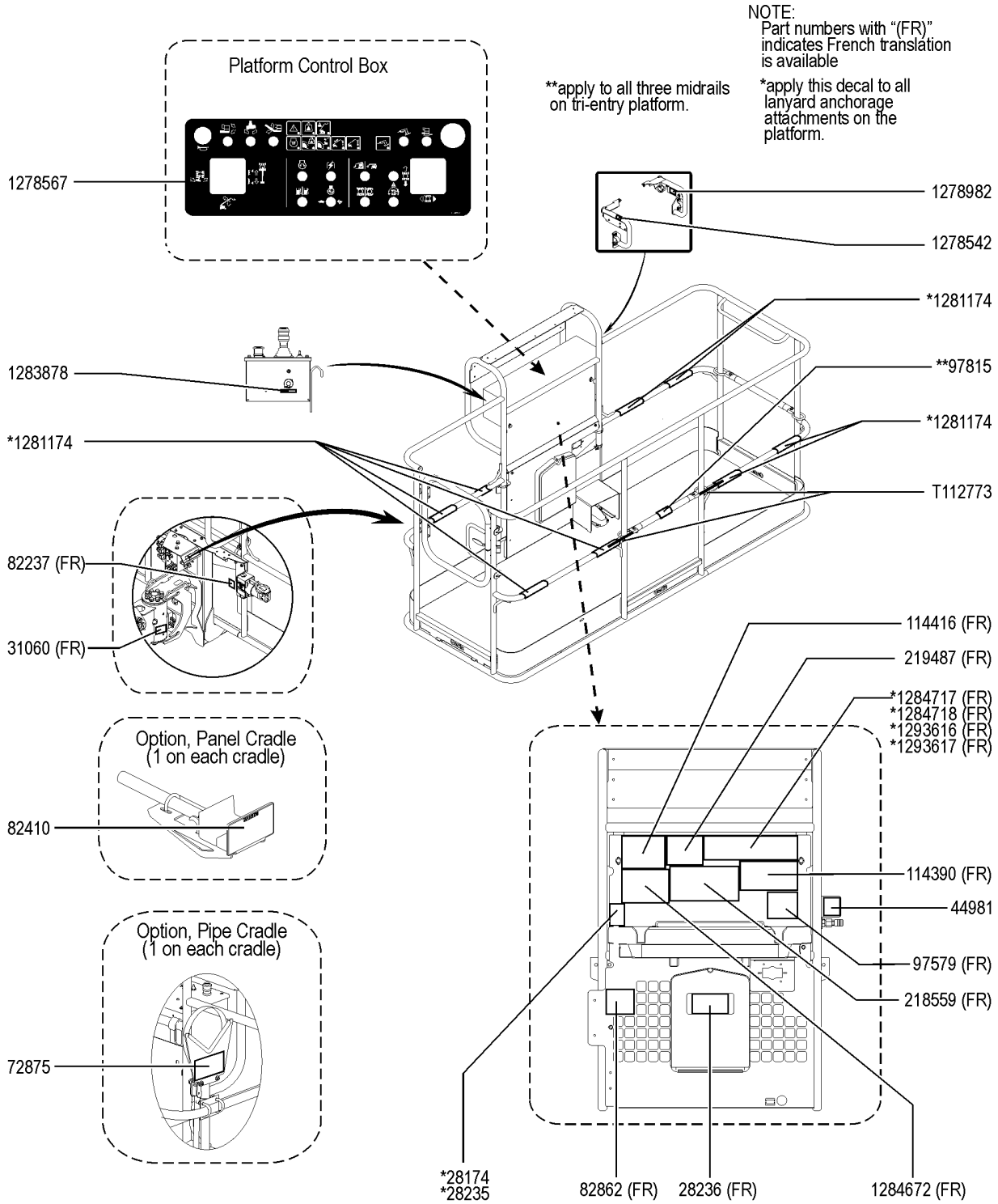

Item	Part No.	Description	Qty.
26	T112773GT	TAPE, PROTECTIVE MASK	2

106.1 Decals with Symbols, Hydraulic Tank Side

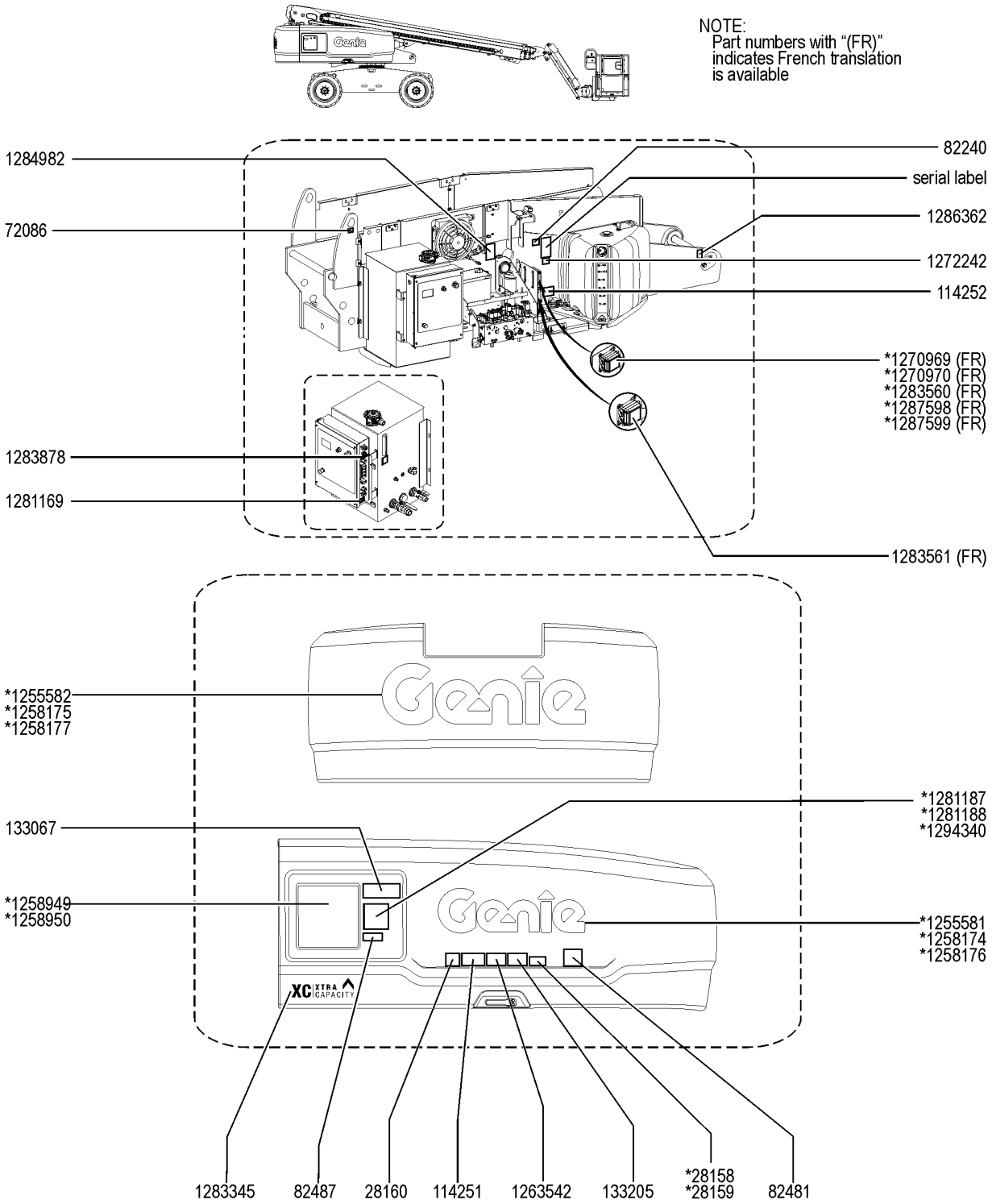

Item	Part No.	Description	Qty.
		*These decals are model, option or configuration specific.	
1	28158GT	DECAL,LABEL,UNLEADED GAS ONLY Option, Fuel	1
2	28159GT	DECAL,DIESEL Option, Fuel	1
3	28160GT	DECAL,LABEL,LIQUID PROPANE Option, LPG Tank	1
4	72086GT	DECAL,LABEL,LIFTING EYE	1
5	82240GT	DECAL,LABEL,105 DB CE Only	1
6	82481GT	DECAL,SYMBOL-BATTERY SAFETY	1
7	82487GT	DECAL,SYMBOL-READ THE MANUAL	1
8	114251GT	DECAL,LABEL,NO SMOKING,SYMB	1
9	114252GT	DECAL,LABEL,TIP OVER LMT SWTCH	1
10	133067GT	DECAL,DANGER,ELEC.HAZ.STAY CLR	1
11	133205GT	DECAL,LABEL, ELECTRO HAZARD	1
12	1255581GT	DECAL COSMETIC,10" GENIE BLUE	1
13	1255582GT	DECAL COSMETIC,15" GENIE BLUE	1
14	1258174GT	DECAL COSMETIC,10" GENIE WHITE	1
15	1258175GT	DECAL COSMETIC,15" GENIE WHITE	1
16	1258176GT	DECAL COSMETIC,10" GENIE BLACK	1
17	1258177GT	DECAL COSMETIC,15" GENIE BLACK	1
18	1258949GT	OVERLAY GROUND CONTROLS S-BOOM JIB S-65 XC, S-65 TRAX	1
18B	1286638GT	KIT,GBOX OVERLAY,ALC600,S-BOOMS,JIB S-65 XC, S-65 TRAX (includes 1258949)	
19	1258950GT	OVERLAY GROUND CONTROLS S-BOOM S-60 XC, S-60 TRAX	1
19B	1286637GT	KIT,GBOX OVERLAY,ALC600,S-BOOMS S-60 XC, S-60 TRAX (includes 1258950)	
20	1263542GT	DECAL, COMPARTMENT ACCESS	1
21	1270969GT	DECAL, VEC, DEUTZ2.9T, S80 Deutz 2.9	1
22	1270970GT	DECAL, VEC, DEUTZ2011T, S80 Deutz 2011	1
23	1272242GT	DECAL,MACHINE REGISTRATION/OWN	1
24	1281169GT	DECAL,RECOVERY SWITCH	1
25	1281187GT	DECAL,EMERGENCY LOWERING,S-80 XC S-60 XC, S-60 TRAX	1

106.1 Decals with Symbols, Hydraulic Tank Side

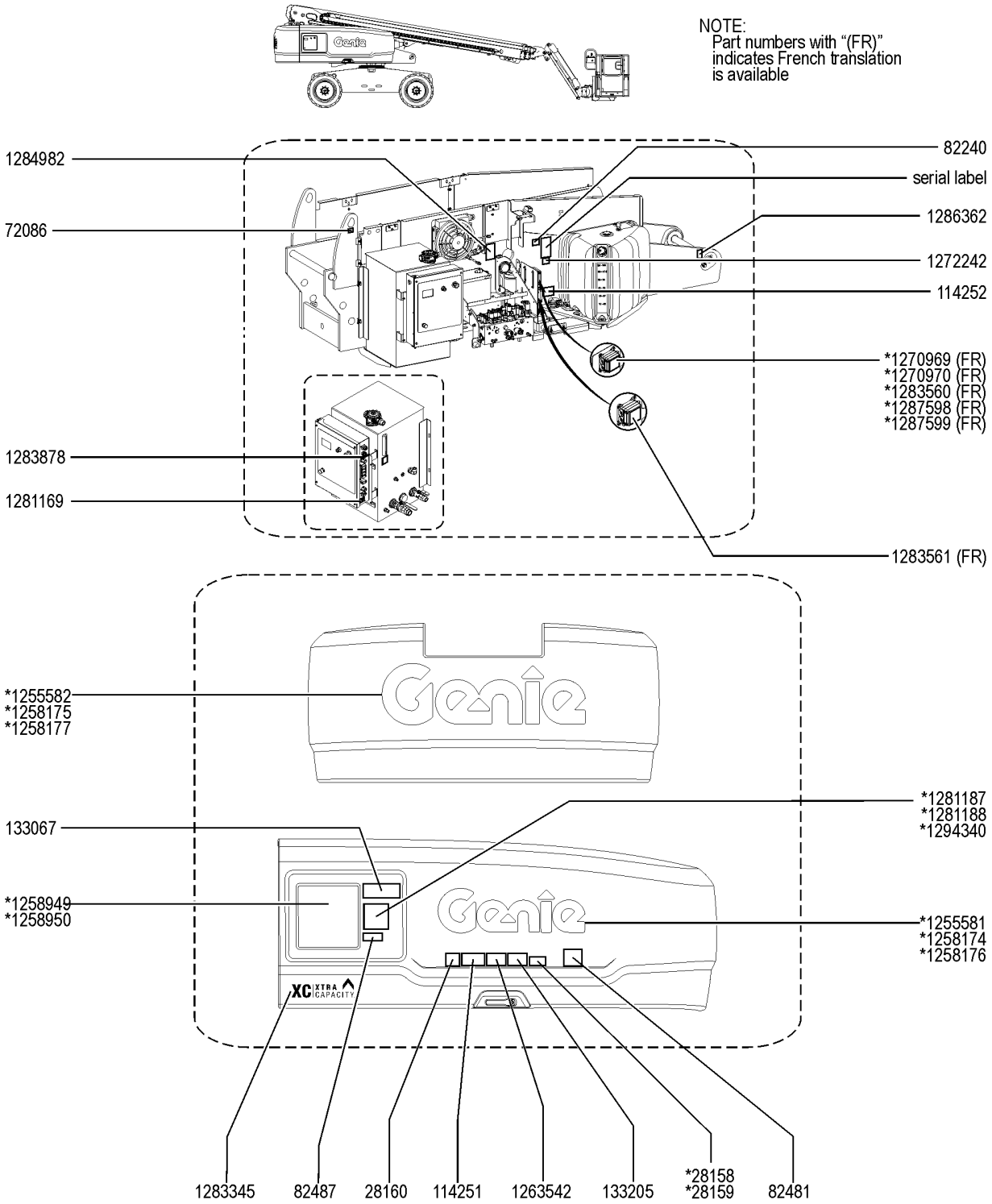

106.1 Decals with Symbols, Hydraulic Tank Side

Item	Part No.	Description	Qty.
26	1281188GT	DECAL,EMERGENCY LOWERING S-65 XC, S-65 TRAX	1
27	1283345GT	DECAL, COVER, XC XTRA CAPACITY	1
28	1283560GT	DECAL, VEC 1, PERKINS 404F-E22TI, S60/65XC Perkins 404F-E22T	1
29	1283561GT	DECAL, VEC 2, PERKINS 404F-E22TI, S60/65XC Perkins 404F-E22T	1
30	1283878GT	DECAL, TECHPRO LINK	1
31	1284982GT	DECAL,ACCUMULATOR EXPLOSION HAZARD,SYMBOL	1
32	1286362GT	DECAL, BOOM SUPPORT, SYMBOL	1
33	1287598GT	DECAL, VEC, PERKINS404D, S60/65XC Perkins 404D-22	1
34	1287599GT	DECAL, VEC, FORD MSG425, S60/65XC Ford MSG-425	1
35	1294340GT	DECAL, WARNING, RUNAWAY MACHINE,S-60/65 HF,SYMBOL	1

107.1 Decals with Symbols, Chassis

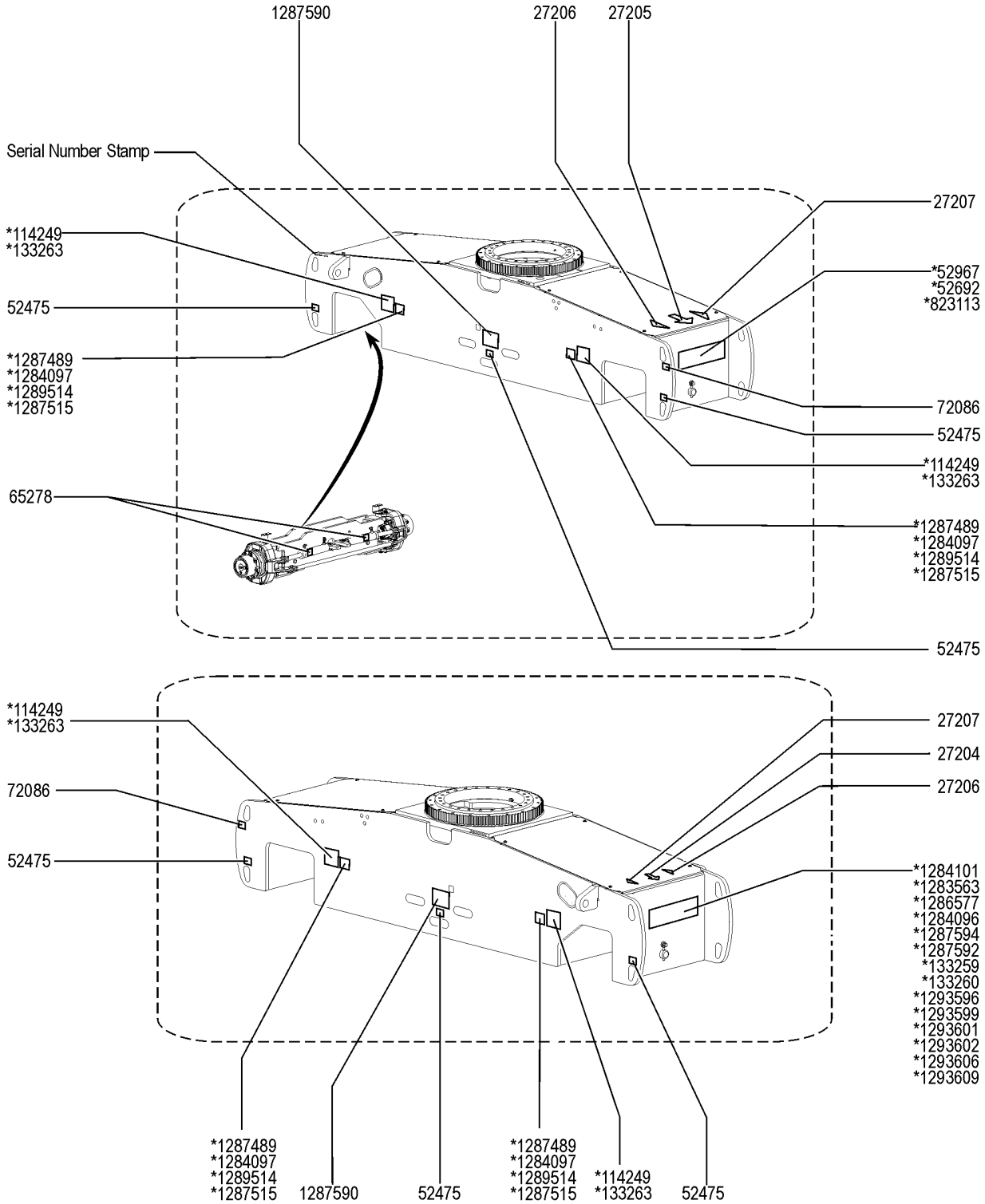

Item	Part No.	Description	Qty.
1	27204GT	DECAL,ARROW BLUE	1
3	27206GT	DECAL,TRIANGLE,BLUE	2
4	27207GT	DECAL,TRIANGLE,YELLOW	2
5	52475GT	DECAL,LABEL,TRANSPORT TIEDOWN*	6
6	52692GT	DECAL,COSMETIC,4X4 BLUE	1
7	52967GT	DECAL,COSMETIC,4 X 4	1
8	65278GT	DECAL,CAUTION,NO STEP	2
9	72086GT	DECAL,LABEL,LIFTING EYE	2
10	114249GT	DECAL,LABEL,TIPOVER,TIRES,SYMB S-60 XC, S-65 XC	4
11	133259GT	DECAL,COSM, S60 TRAX S-60 TRAX	1
12	133260GT	DECAL,COSM, S65 TRAX S-65 TRAX	1
13	133263GT	DECAL,LABEL,TIPOVER,TRAX,SYMB S-60 TRAX, S-65 TRAX	4
13B	1323412GT	DECAL,LABEL,TIPOVER,TRAX,SYMB S-60 TRAX, S-65 TRAX	4
14	823113GT	DECAL,COSM,4X4,BLACK	1
15	1283563GT	DECAL, CHASSIS, S-60 XC, BLUE S-60 XC	1
16	1284096GT	DECAL, CHASSIS, S-65 XC S-65 XC	1
17	1284097GT	DECAL,LABEL,WHEEL LOAD S65 XC S-65 XC	4
18	1284101GT	DECAL, CHASSIS, S-60 XC S-60 XC	1
19	1286577GT	DECAL, CHASSIS, S-60 XC, BLK S-60 XC	1
20	1287489GT	DECAL,LABEL,WHEEL LOAD S60 XC S-60 XC	4
21	1287515GT	DECAL, WHEEL LOAD S65 TRAX S-65 TRAX	4
21B	1323455GT	DECAL, WHEEL LOAD S65XC TRAX S-65 TRAX	4
22	1287590GT	DECAL, TRANSPORT/LIFTING, S-60/65XC	2
23	1287592GT	DECAL, CHASSIS, S-65 XC, BLK S-65 XC	1
24	1287594GT	DECAL, CHASSIS, S-65 XC, BLUE S-65 XC	1
25	1289514GT	DECAL, WHEEL LOAD S60XC TRAX S-60 TRAX	4
25B	1323454GT	DECAL, WHEEL LOAD S60XC TRAX S-60 TRAX	4
26	1293596GT	DECAL, CHASSIS, S-65 HF	

107.1 Decals with Symbols, Chassis

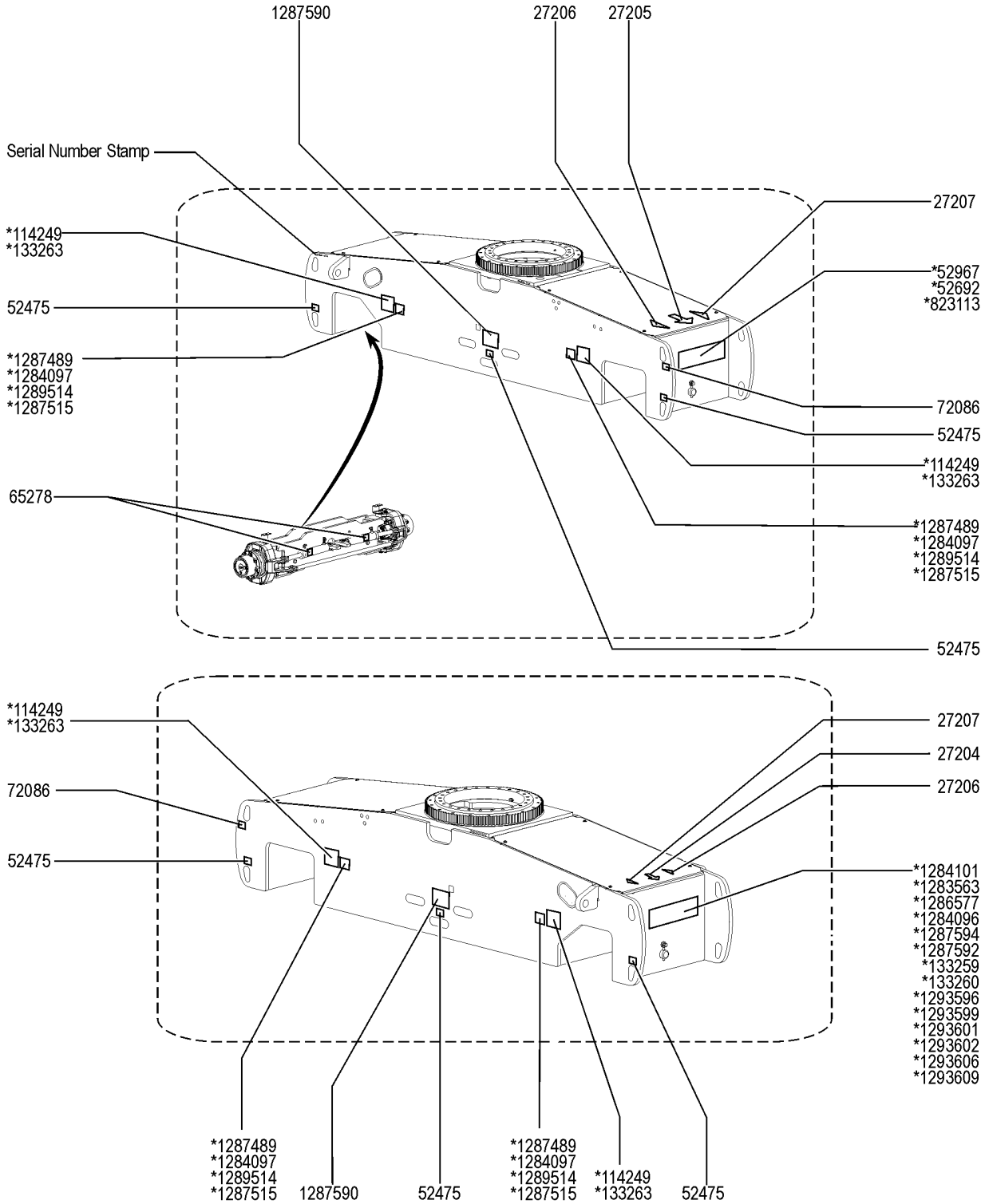

Item	Part No.	Description	Qty.
27	1293599GT	DECAL, CHASSIS, S-65 HF, BLK	1
28	1293601GT	DECAL, CHASSIS, S-65 HF, BLUE	1
29	1293602GT	DECAL, CHASSIS, S-60 HF, BLUE	
30	1293606GT	DECAL, CHASSIS, S-60 HF, BLK	
31	1293609GT	DECAL, CHASSIS, S-60 HF	

108.1 Decals with Symbols, Engine Side

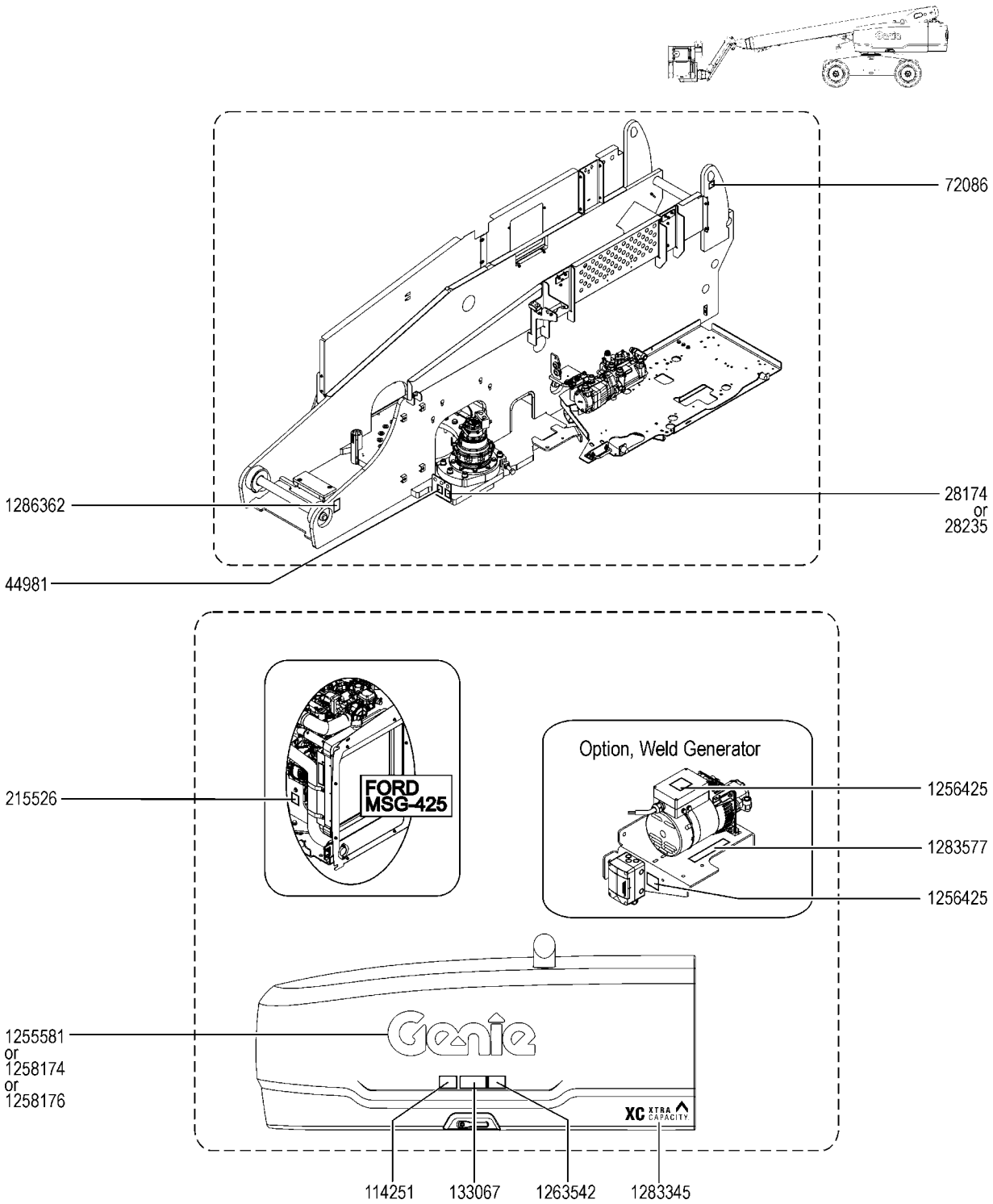

108.1 Decals with Symbols, Engine Side

Item	Part No.	Description	Qty.
1	28174GT	DECAL,POWER TO PLATFORM 230V	1
2	28235GT	DECAL,POWER TO PLATFORM 115V	1
3	44981GT	DECAL,LABEL,AIRLINE 110 PSI Option, airline to plat	1
4	72086GT	DECAL,LABEL,LIFTING EYE	1
5	114251GT	DECAL,LABEL,NO SMOKING,SYMB	1
6	133067GT	DECAL,DANGER,ELEC.HAZ.STAY CLR	1
7	215526GT	DECAL,LABEL,BELT,MSG425 Ford MSG-425	1
8	1255581GT	DECAL COSMETIC,10" GENIE BLUE	1
9	1256425GT	DECAL, DANGER, ELECTROCUTION H Option, Weld Generator	2
10	1258174GT	DECAL COSMETIC,10" GENIE WHITE	1
11	1258176GT	DECAL COSMETIC,10" GENIE BLACK	1
12	1263542GT	DECAL, COMPARTMENT ACCESS	1
13	1283345GT	DECAL, COVER, XC XTRA CAPACITY	1
14	1283577GT	DECAL, LIFT^POWER, 1X7 INCH Option, Welder	1
15	1286362GT	DECAL, BOOM SUPPORT, SYMBOL	1

109.1 Decals with Symbols, Boom

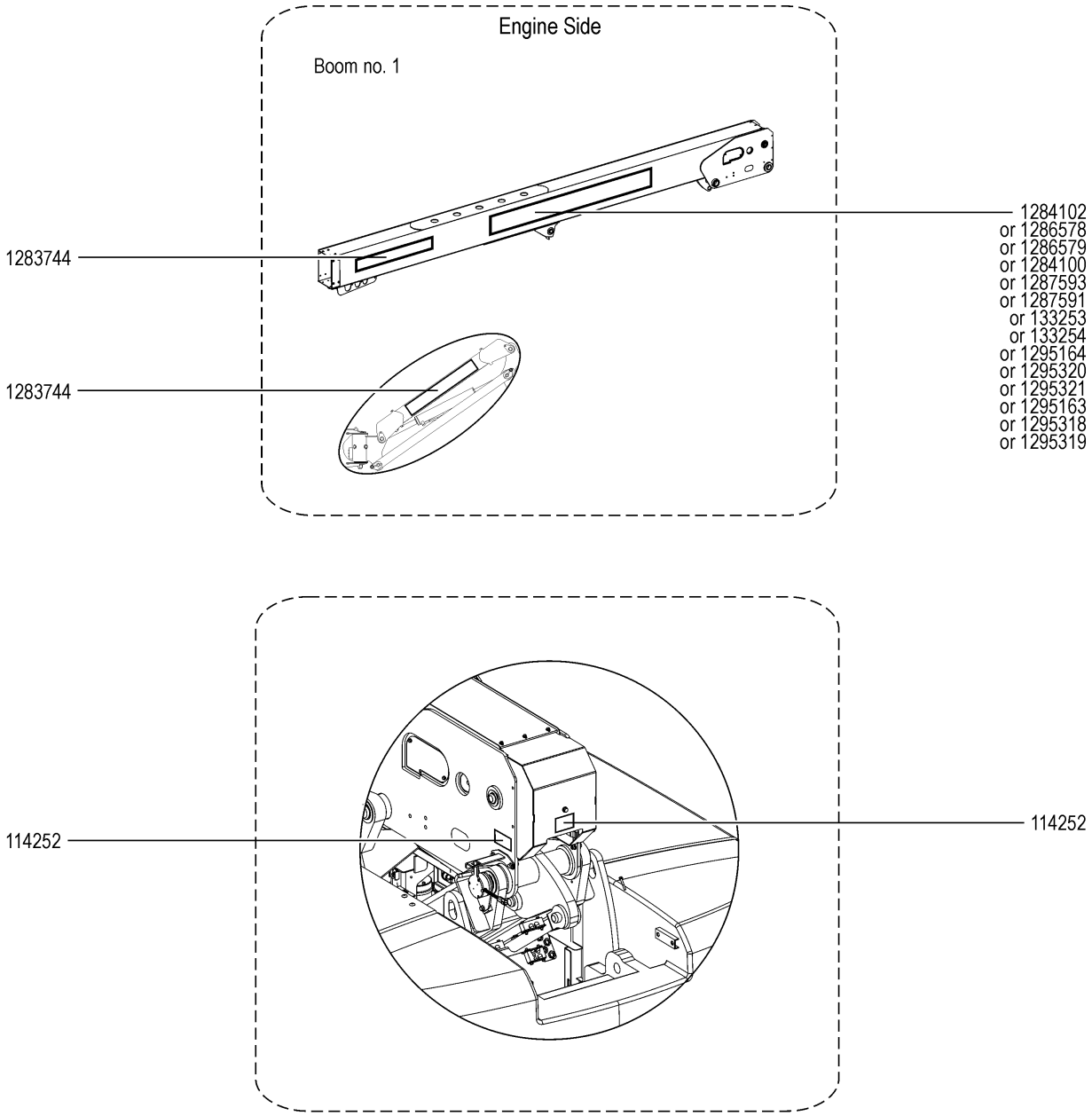

Item	Part No.	Description	Qty.
1	114252GT	DECAL,LABEL,TIP OVER LMT SWTCH	2
2	133253GT	DECAL,COSM,GENIE S60 TRAX S-60 TRAX	1
3	133254GT	DECAL, COSM,GENIE S65 TRAX S-65 TRAX	1
4	1283744GT	DECAL, LIFT^POWER Option, Lift Power	1
5	1284100GT	DECAL, BOOM, GENIE S-65 XC S-65 XC	1
6	1284102GT	DECAL, BOOM, GENIE S-60XC S-60 XC	1
7	1286578GT	DECAL, BOOM, GENIE S-60 XC, BLUE S-60 XC	1
8	1286579GT	DECAL, BOOM, GENIE S-60 XC, BLK S-60 XC	1
9	1287591GT	DECAL, BOOM, GENIE S-65 XC, BLK S-65 XC	1
10	1287593GT	DECAL, BOOM, GENIE S-65 XC, BLUE S-65 XC	1
11	1295163GT	DECAL, BOOM, S-65 HF	1
12	1295164GT	DECAL, BOOM, S-60 HF	1
13	1295318GT	DECAL,BOOM,S-65HF,BLUE	1
14	1295319GT	DECAL,BOOM,S-65HF,BLACK	1
15	1295320GT	DECAL,BOOM,S-60HF,BLUE	1
16	1295321GT	DECAL,BOOM,S-60HF,BLACK	1

110.1 Decals with Symbols, Platform

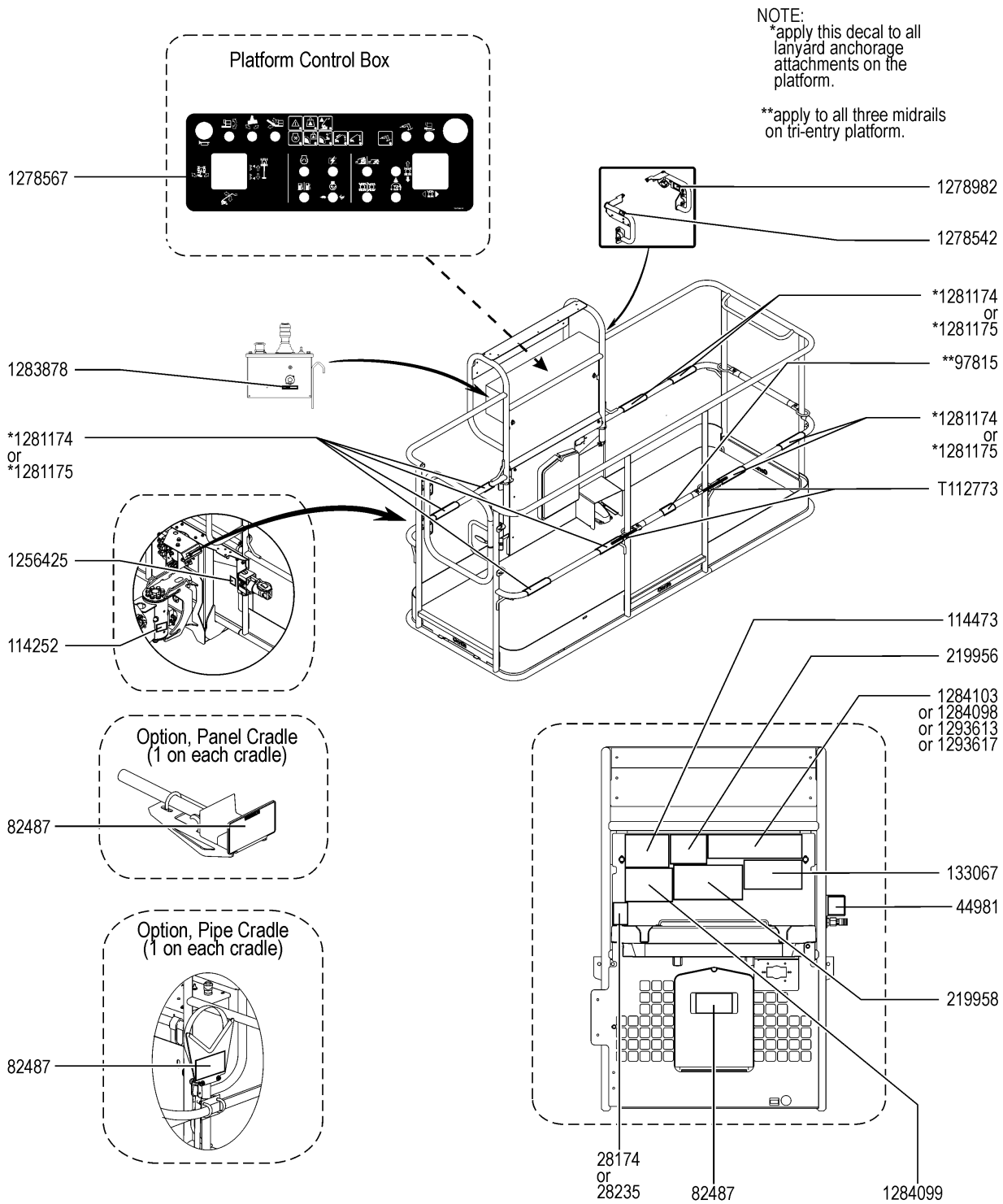

Item	Part No.	Description	Qty.
A	1296524GT	DECAL KIT,PLAT S-60/65 XC,SYMBOL	
1	28174GT	DECAL,POWER TO PLATFORM 230V	1
2	28235GT	DECAL,POWER TO PLATFORM 115V	1
3	44981GT	DECAL,LABEL,AIRLINE 110 PSI Option, Airline to Plat	1
4	82487GT	DECAL,SYMBOL-READ THE MANUAL	1
5	97815GT	DECAL,LABEL,LOWER MIDRAIL	1
6	114252GT	DECAL,LABEL,TIP OVER LMT SWTCH	1
7	114473GT	DECAL,DANGER,TIPOVER,TILT,SYM	1
8	133067GT	DECAL,DANGER,ELEC.HAZ.STAY CLR	1
9	219956GT	DECAL,PLATFORM OVERLOAD	1
10	219958GT	DECAL,TIP-OVER,CRUSH	1
11	1256425GT	DECAL, DANGER, ELECTROCUTION H Option, Welder	1
12	1278542GT	DECAL, INSTRUCTION, CONTACT ALARM	1
13	1278567GT	OVERLAY,PLATFORM CONTROLS,S-BOOM,XC	1
14	1278982GT	DECAL, INSTRUCTION, ACTUATOR SWITCH SOCKET	1
15	1281174GT	DECAL,LANYARD,FALL ARREST/FALL RESTRAINED ANSI	8
16	1281175GT	DECAL,LANYARD,FALL RESTRAINED CE	8
17	1283878GT	DECAL, TECHPRO LINK	1
18	1284098GT	DECAL,DANGER,CAPICITY S-65 XC,SYMBOL S-65 XC , S-65 TRAX	1
19	1284099GT	DECAL,WARNING,RUNAWAY MACHINE,S-60/65 XC,SYMBOL	1
20	1284103GT	DECAL,DANGER,CAPICITY S-60 XC,SYMBOL S-60 XC, S-60 TRAX	1
21	1293616GT	DECAL,DANGER,CAPICITY S-65 HF,SYMBOL	
22	1293617GT	DECAL,DANGER,CAPICITY S-60 HF,SYMBOL	
23	T112773GT	TAPE, PROTECTIVE MASK	2

201.1 Steer End

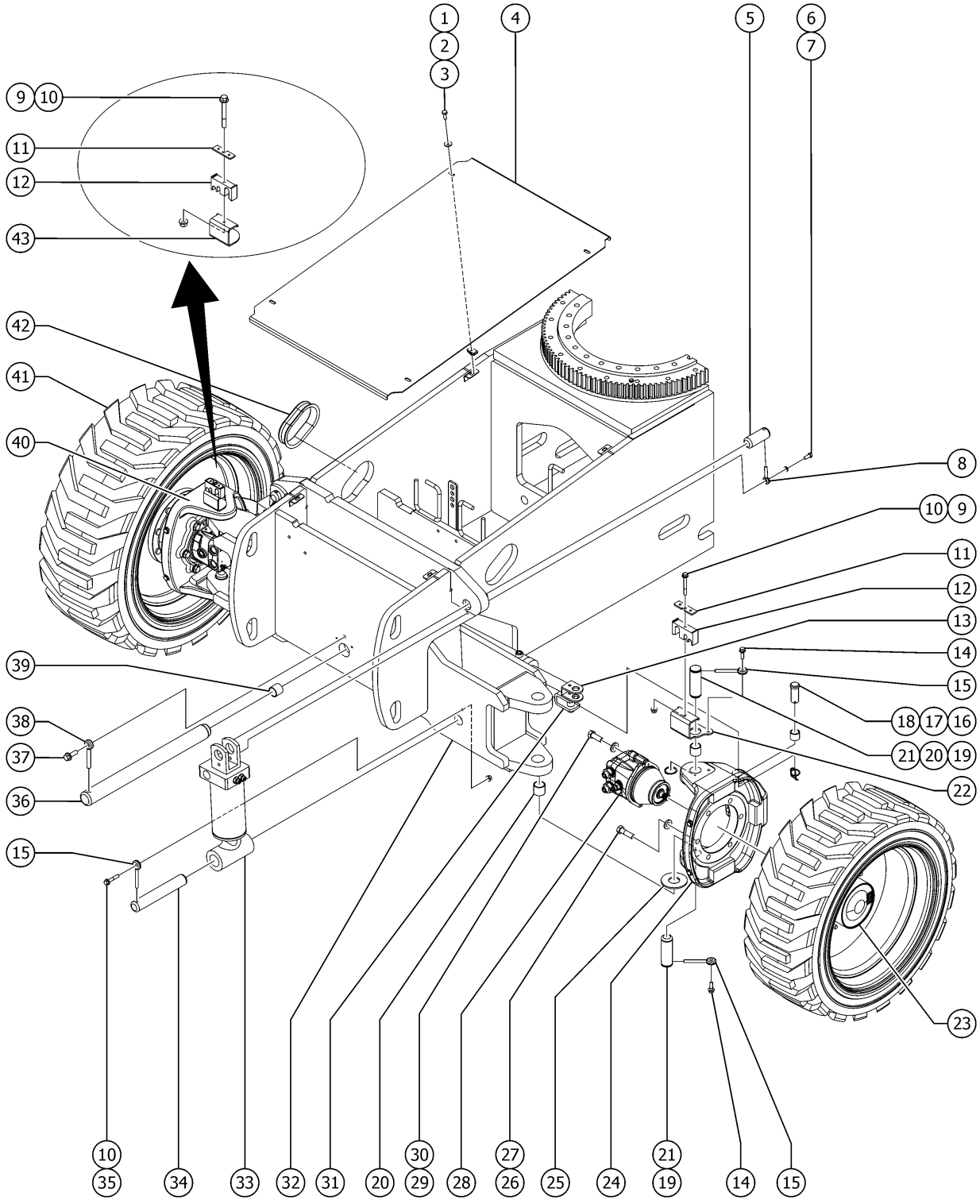

201.1 Steer End

Item	Part No.	Description	Qty.
1	824059GT	SCREW, HHC, 1/4-20 X .75, 8, ZAG	4
2	824113GT	WASHER,FLAT,USS,1/4,ZAG	4
3	56912GT	SPRING CLIP,1/4-20,.025-.15X.54,ZAG	4
4	1255703GT	COVER,DRIVE CHASSIS	1
5	94221GT	PIN,1.50DIAX3.75LG,1HOLE	2
6	824067GT	SCREW, HHC, 3/8-16 X 1, 8, ZAG	2
7	824110GT	WASHER, LOCK, 3/8, ZAG	2
8	1255452GT	ROD END,.375 X 2.25,ZAG	2
9	824095GT	SCREW, HHF, 3/8-16 X 3, 8, ZAG	2
10	1274322GT	NUT,NYLOCK FLG,3/8-16,F,ZAG	4
11	1255706GT	CLAMP TOP,HOSE ROUTING***	2
12	106516GT	CLAMP,HOSE,2X4,1X6,2X8***	2
13	59460GT	CYLINDER,STEERING*** (4WD models)	2
13-	89294GT	SEAL KIT CYLINDER (59460)	
13A	125865GT	CYLINDER, STEER (Trax)	2
14	824091GT	SCREW, HHF, 3/8-16 X 1.25, 8, ZAG	4
15	825019GT	ROD END, .375X3.69, ZAG	6
16	824127GT	PIN,CLEVIS,1.0X2.41,SAE,ZAG	6
17	25817GT	BEARING,1.00IDX1.25ODX1.00L	6
18	824129GT	RUE RING,1.0,ZAG	6
19	110221GT	PIN,GROOVE/HOLE,1.50 DIAX4.475	4
20	119619GT	BEARING,1.5 ID X 1.75 ODX1.5L	6
21	825796GT	SNAP RING,EXTERNAL,1.50,ZAG	4
22	1255705GT	BRACKET,HOSE ROUTING,AXLE LH	1
23A		WHEEL DRIVE 57.5:1 4WD PN 231612 REPLACED OMNIGEAR WHEEL DRIVE PN 229702	2
23A-	139965GT	WHEEL STUD,5/8-18,OMNI*** for 229702	
23A-	139966GT	ROD,DISCONNECT,OMNI*** for 229702	
23A-	139967GT	CAP,DISENGAGE,OMNI*** for 229702	

201.1 Steer End

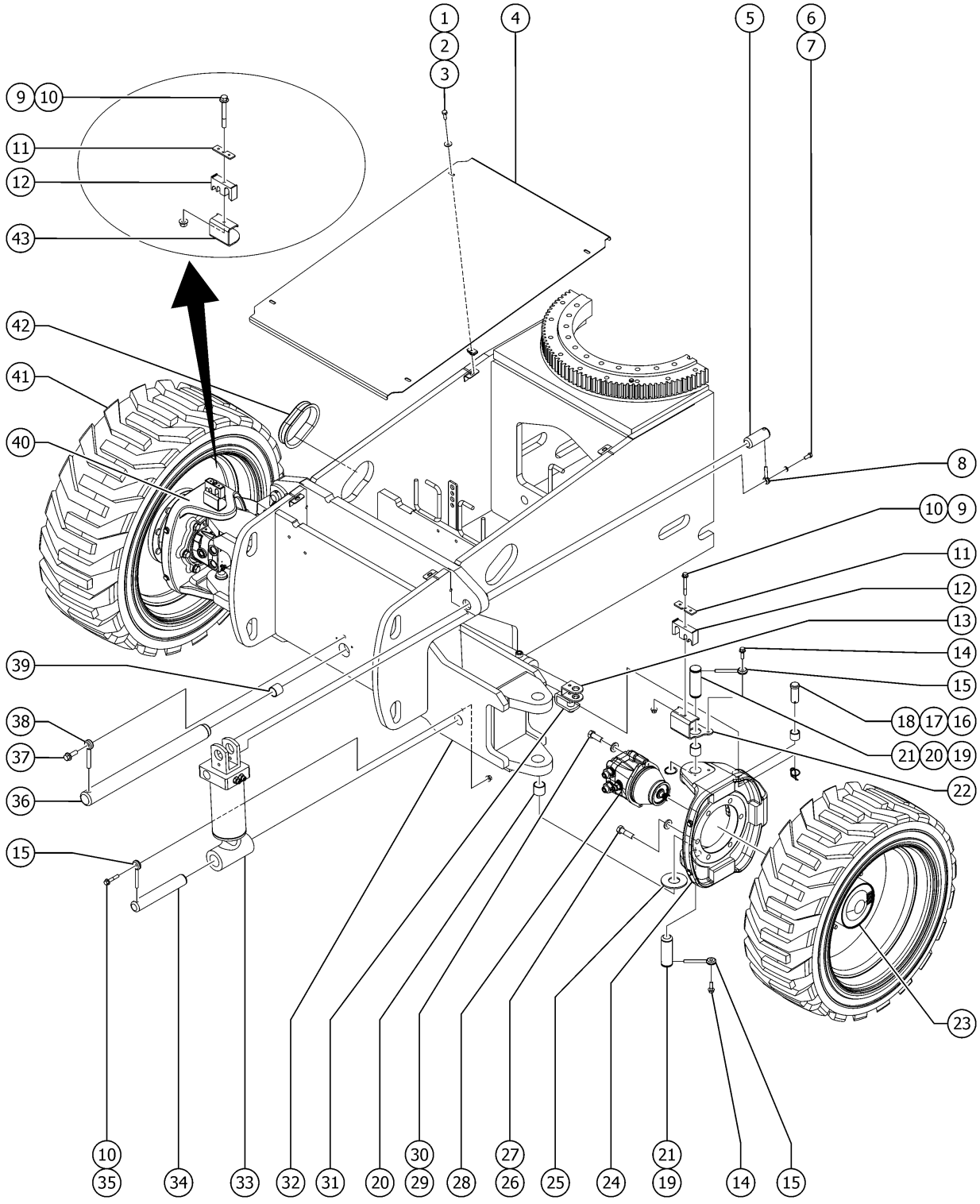

Item	Part No.	Description	Qty.
23A-	139968GT	O-RING,END COVER,OMNI*** for 229702	
23A-	139969GT	LINING KIT,BRAKE,OMNI*** for 229702	
23A-	139970GT	SEAL KIT,BRAKE,OMNI*** for 229702	
23A-	139971GT	BEARING KIT,OMNI*** for 229702	
23A-	139972GT	SEAL KIT,GEARBOX,OMNI*** for 229702	
23A-	147033GT	O-RING,PIPE PLUG KIT,OMNI*** for 229702	
23A-	147034GT	PIPE PLUG KIT,OMNI*** for 229702	
23A-	1260084GT	END CAP, WHEEL DRIVE for 229702	
23B	88887GT	WHEEL DRIVE 56:1 2WD 2WD models; not shown	2
23B-	102126GT	SEAL KIT,DRIVE HUB (88887) for 88887	
23B-	102131GT	DISCONNECT KIT (88887) for 88887	
23B-	215642GT	BRAKE KIT (88886)*** for 88887	
23B-	102163GT	RING,RETAINING*** for 88887	
23B-	215340GT	LOCKRING, RR for 88887	
23B-	102167GT	SHAFT,INPUT DRIVE HUB for 88887	
23B-	102162GT	LUG,STUD/WHEEL (88887) for 88887	
23B-	102516GT	RING,RETAINING,INTERNAL for 88887	
23B-	102126GT	SEAL KIT,DRIVE HUB (88887) for 88887	
23B-	1274613GT	HUB SCREW for 88887	
23C	231612GT	WHEEL DRIVE,W/BRAKE 4WD	2
23C-	102158GT	O-RING,.103 X 4.737,VITON, 75D	
23C-	106117GT	O-RING,2-010,VITON	
23C-	230849GT	WHEEL STUD,5/8-18X67MM	
23C-	139966GT	ROD,DISCONNECT,OMNI***	
23C-	139967GT	CAP,DISENGAGE,OMNI***	
23C-	139968GT	O-RING,END COVER,OMNI***	
23C-	139969GT	LINING KIT,BRAKE,OMNI***	
23C-	139970GT	SEAL KIT,BRAKE,OMNI***	

201.1 Steer End

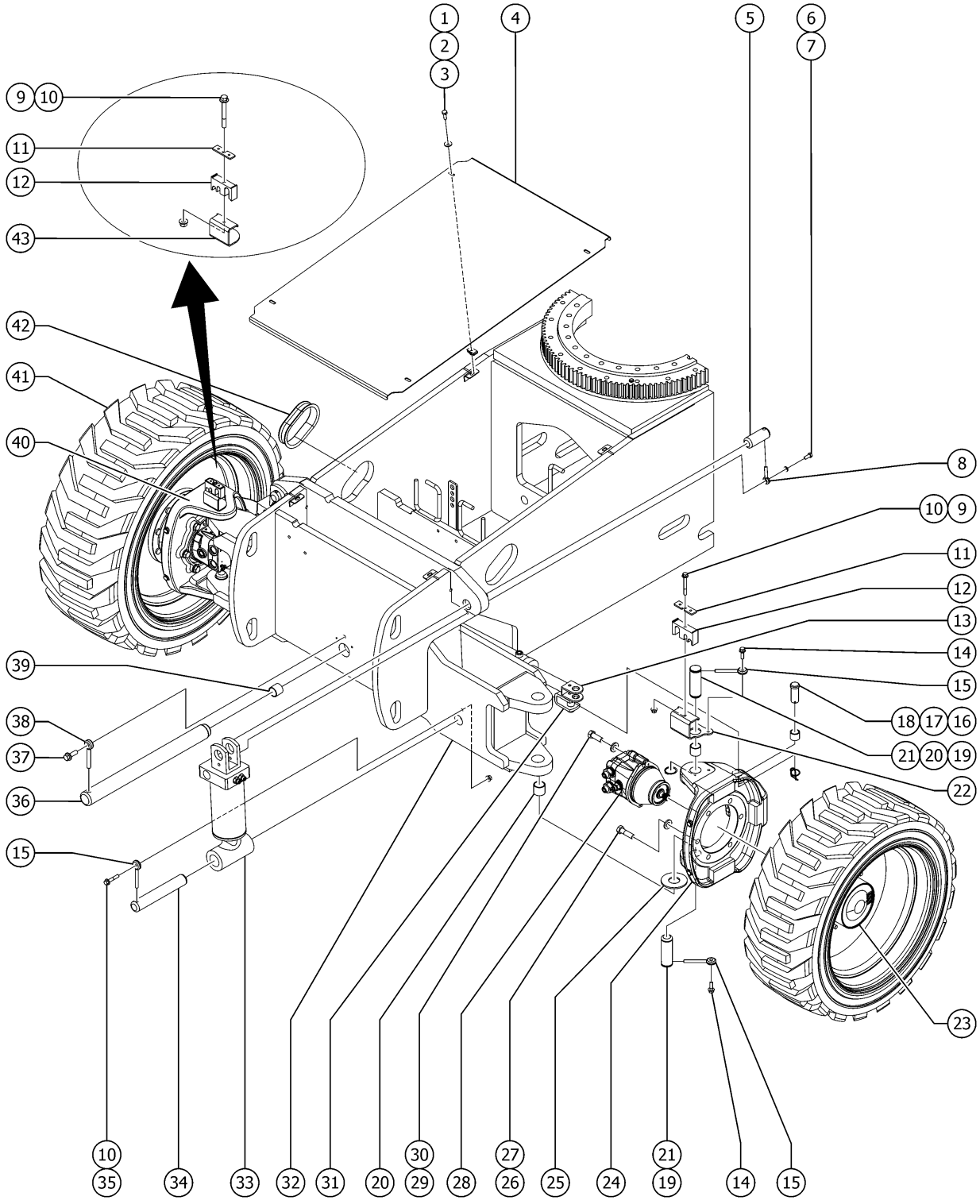

Item	Part No.	Description	Qty.
23C-	139971GT	BEARING KIT,OMNI***	
23C-	139972GT	SEAL KIT,GEARBOX,OMNI***	
23C-	147033GT	O-RING,PIPE PLUG KIT,OMNI***	
23C-	147034GT	PIPE PLUG KIT,OMNI***	
23C-	1260082GT	SPRING, HELICAL, RH	
24	1255700GT	YOKE,CASTING,LH,MACHINED**	1
24-	25817GT	BEARING,1.00IDX1.25ODX1.00L	
25	45074GT	WASHER,THRUST,1.5 X 3.5 X .187	2
26	1255385GT	SCREW,HHC,5/8-11X2.25,8,ZAG	12
27	1256182GT	WASHER,FLAT,5/8,F436,HRD,ZAG	12
28	88884GT	MOTOR,PISTON,30CC,4WD*** 4WD models	2
28-	102158GT	O-RING,.103 X 4.737,VITON, 75D for 88884	
28-	106117GT	O-RING,2-010,VITON for 88884	
28-	102155GT	BEARING,BALL DRIVE SHAFT for 88884	
28-	102159GT	SHAFT,15 TOOTH for 88884	
28-	106098GT	SEAL KIT,MOTOR,LC/KC*** for 88884	
28-	27067GT	SEAL,SHAFT-SUNDSTRAND*** for 88884	
28-	72290GT	SNAP RING(M46 UNITS)* for 88884	
29	824072GT	SCREW,HHC,7/16-14X1.25,ZAG	4
30	1257078GT	WASHER, .469 X .768 HRD, ZAG	4
31	1255710GT	WELDMENT, TIE ROD (4WD models)	1
31A	1283847GT	WELDMENT, TIE ROD, TRAX, 400MM (15.75 IN) WIDE TRACK (Trax)	1
32	1255708GT	WELDMENT, FRONT AXLE	1
32A	1283785GT	WELDMENT,FRONT AXLE, TRAX, 400MM (15.75 IN) WIDE TRACK	1
33	1283511GT	CYLINDER, OSCILLATE S65XC	2
33-	89295GT	SEAL KIT,CYLINDER (63189)	
33-	1287506GT	VALVE, CB. CBCH-LJN@4000	
33-	74735GT	VALVE,COUNTERBALANCE	

201.1 Steer End

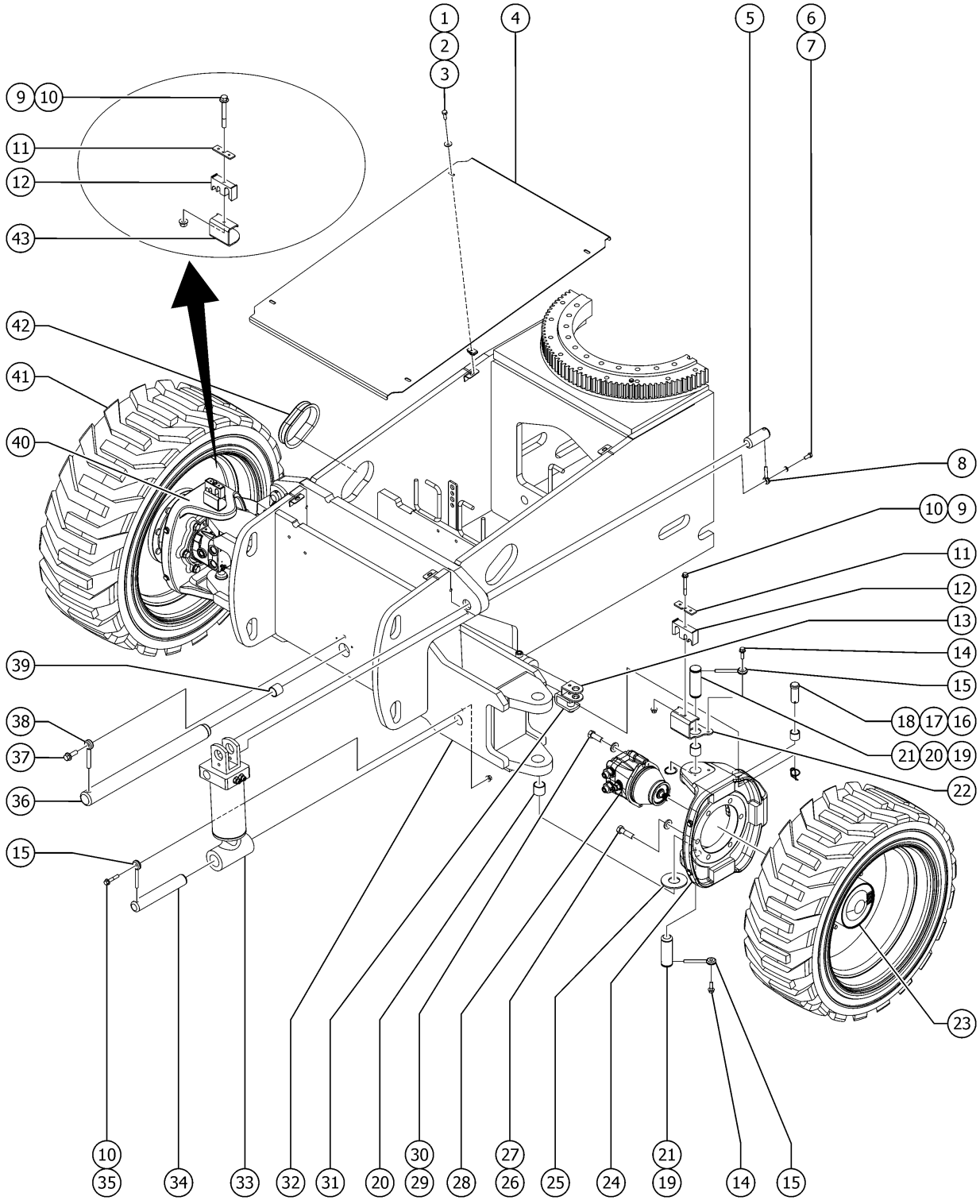

201.1 Steer End

Item	Part No.	Description	Qty.
34	77880GT	PIN,1.50DIAX9.38LG,1HOLE	2
35	1253478GT	SCREW,HHF,3/8-16X2,8,ZAG	2
36	77610GT	PIN,2.00DIAX23.13LG,CHAMFER	1
37	1253498GT	SCREW,HHF,1/2-13X1.5,8,ZAG	1
37B	8177GT	SCREW,HHC,1/2-13 X 1.5 models with non-marking tires	
37B	6095GT	WASHER,FLAT,USS,1/2",Y models with non-marking tires	
37C	107578GT	GROUND STRAP,24"LONG models with non-marking tires	1
38	1256267GT	ROD END,.5 X 3.75,ZAG	1
39	42014GT	BEARING,2.00IDX2.25ODX2.00L	2
40	1255699GT	YOKE,CASTING,RH,MACHINED**	1
40-	25817GT	BEARING,1.00IDX1.25ODX1.00L	
41	77790GT	TIRE & WHEEL ASSY, RH, 355/55D625, FF RT, Foam-filled, right, (to SN S65XCH-46419) (from SN S65XCH-47703)	2
41-	162216GT	TIRE & WHEEL ASSY,FOAM,RH (from SN S65XCH-46420) (to SN S65XCH-47702)	2
41	77791GT	TIRE & WHEEL ASSY, LH, 355/55D625, FF RT, Foam-filled, left, (to SN S65XCH-46419) (from SN S65XCH-47703)	2
41-	162217GT	TIRE & WHEEL ASSY,FOAM,LH (from SN S65XCH-46420) (to SN S65XCH-47702)	2
41B	106647GT	TIRE & WHEEL ASSY,RH,FOAM,NM RT, Foam-filled, Non-marking, right	2
41B	106648GT	TIRE & WHEEL ASSY,LH,FOAM,NM RT, Foam-filled, Non-marking, left	2
41C	1288403GT	ASSEMBLY, WHEEL/TIRE,HF,20PR Turf, Hi-flotation	4
41C-	94333GT	WHEEL,22.5X14.00*** for 1288403	
41C-	1286372GT	TIRE,41/18LLX22.5,20PR,TURF for 1288403	
41D	1288405GT	TIRE/WHEEL ASSY,HF W/SEALANT Turf, Hi-flotation with sealant	4
42	53386GT	GUARD, HOSE PROTECTOR	2
43	1255704GT	BRACKET,HOSE ROUTING,AXLE RH	1

202.1 Non-steer End

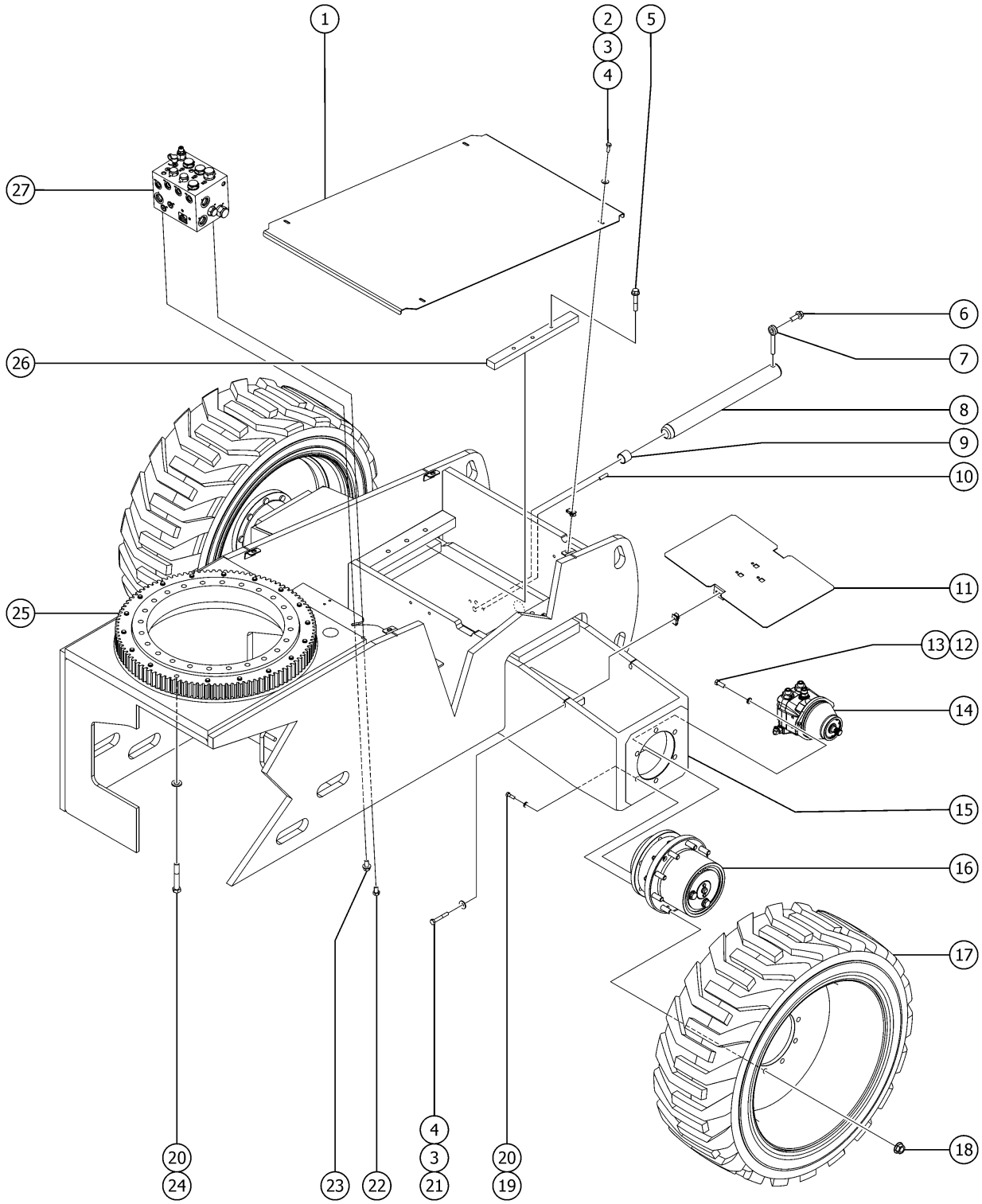

Item	Part No.	Description	Qty.
1	1255703GT	COVER,DRIVE CHASSIS does not include decals, refer to section 1	1
2	824059GT	SCREW, HHC, 1/4-20 X .75, 8, ZAG	4
3	824113GT	WASHER,FLAT,USS,1/4,ZAG	8
4	56912GT	SPRING CLIP,1/4-20,.025-.15X.54,ZAG	8
5	1255802GT	SCREW,HHF,1/2-13X2.5,8,ZAG	3
6	1253498GT	SCREW,HHF,1/2-13X1.5,8,ZAG	1
7	1256267GT	ROD END,.5 X 3.75,ZAG	1
8	77950GT	PIN,2.00DIAX20.88LG,CHAMFER	1
9	42014GT	BEARING,2.00IDX2.25ODX2.00L	2
10	128049GT	PIN, ROLL, .375 X 1.5***	8
11	1255711GT	COVER, REAR AXLE	2
12	824072GT	SCREW,HHC,7/16-14X1.25,ZAG	4
13	1257078GT	WASHER, .469 X .768 HRD, ZAG	4
14	88884GT	MOTOR,PISTON,30CC,4WD*** 4WD models	2
14-	102158GT	O-RING,.103 X 4.737,VITON, 75D for 88884	
14-	106117GT	O-RING,2-010,VITON for 88884	
14-	102155GT	BEARING,BALL DRIVE SHAFT for 88884	
14-	102159GT	SHAFT,15 TOOTH for 88884	
14-	106098GT	SEAL KIT,MOTOR,LC/KC*** for 88884	
14-	27067GT	SEAL,SHAFT-SUNDSTRAND*** for 88884	
14-	72290GT	SNAP RING(M46 UNITS)* for 88884	
15	1283533GT	WELDMENT, REAR AXLE	1
15A	1283783GT	WELDMENT,REAR AXLE,TRAX, 400MM (15.75 IN) WIDE TRACK	1
16A		WHEEL DRIVE 57.5:1 4WD PN 231612 REPLACED OMNIGEAR WHEEL DRIVE PN 229702	2
16A-	139965GT	WHEEL STUD,5/8-18,OMNI*** for 229702	
16A-	139966GT	ROD,DISCONNECT,OMNI*** for 229702	
16A-	139967GT	CAP,DISENGAGE,OMNI*** for 229702	
16A-	139968GT	O-RING,END COVER,OMNI*** for 229702	

202.1 Non-steer End

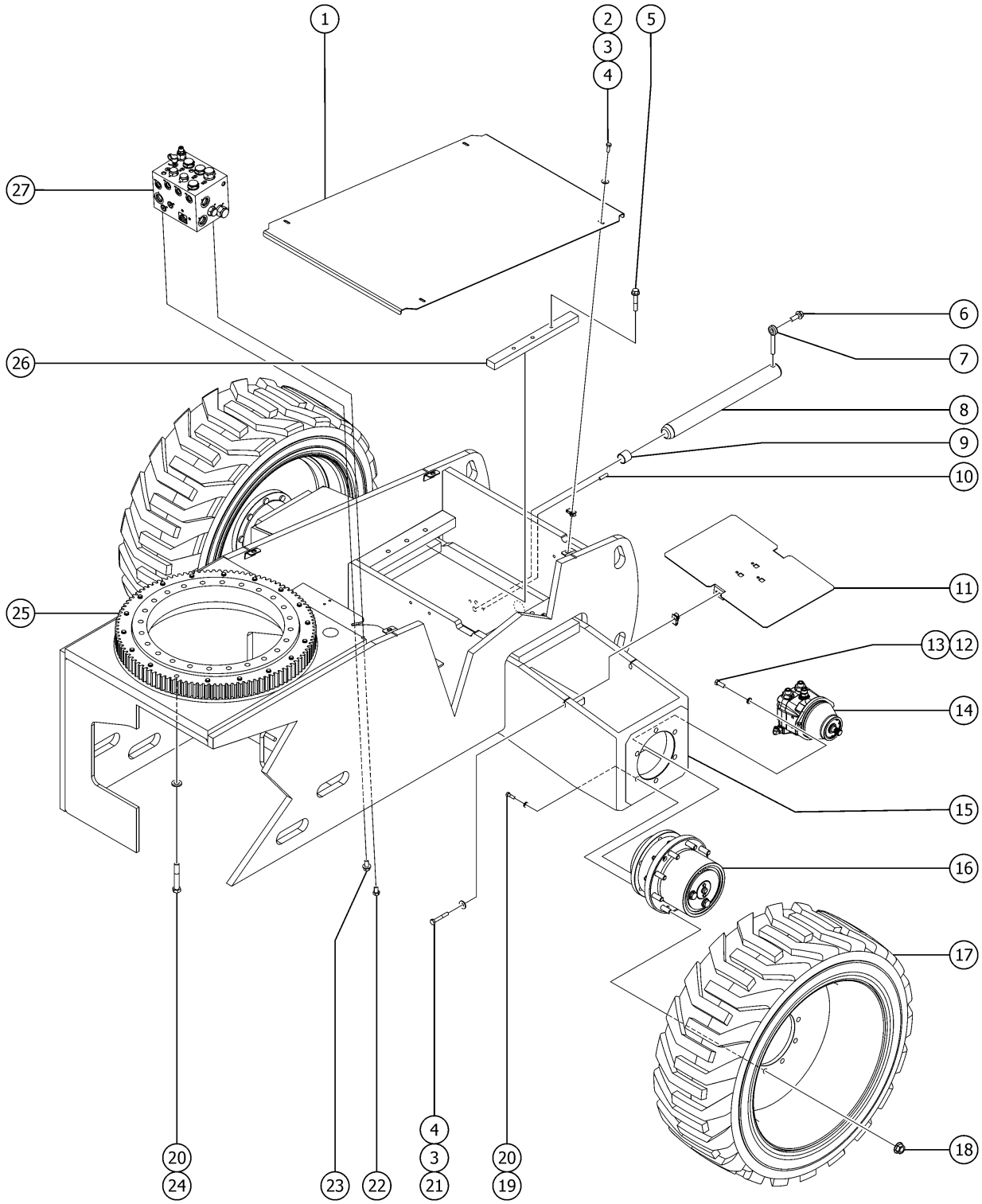

Item	Part No.	Description	Qty.
16A-	139969GT	LINING KIT,BRAKE,OMNI*** for 229702	
16A-	139970GT	SEAL KIT,BRAKE,OMNI*** for 229702	
16A-	139971GT	BEARING KIT,OMNI*** for 229702	
16A-	139972GT	SEAL KIT,GEARBOX,OMNI*** for 229702	
16A-	147033GT	O-RING,PIPE PLUG KIT,OMNI*** for 229702	
16A-	147034GT	PIPE PLUG KIT,OMNI*** for 229702	
16A-	1260084GT	END CAP, WHEEL DRIVE for 229702	
16B	88887GT	WHEEL DRIVE 56:1 2WD	2
16B-	102126GT	SEAL KIT,DRIVE HUB (88887) for 88887	
16B-	102131GT	DISCONNECT KIT (88887) for 88887	
16B-	215642GT	BRAKE KIT (88886)*** for 88887	
16B-	102163GT	RING,RETAINING*** for 88887	
16B-	215340GT	LOCKRING, RR for 88887	
16B-	102167GT	SHAFT,INPUT DRIVE HUB for 88887	
16B-	102162GT	LUG,STUD/WHEEL (88887) for 88887	
16B-	102516GT	RING,RETAINING,INTERNAL for 88887	
16B-	102126GT	SEAL KIT,DRIVE HUB (88887)	1
16B-	1274613GT	HUB SCREW for 88887	
16C	231612GT	WHEEL DRIVE,W/BRAKE 4WD	2
16C-	102158GT	O-RING,.103 X 4.737,VITON, 75D	
16C-	106117GT	O-RING,2-010,VITON	
16C-	230849GT	WHEEL STUD,5/8-18X67MM	
16C-	139966GT	ROD,DISCONNECT,OMNI***	
16C-	139967GT	CAP,DISENGAGE,OMNI***	
16C-	139968GT	O-RING,END COVER,OMNI***	
16C-	139969GT	LINING KIT,BRAKE,OMNI***	
16C-	139970GT	SEAL KIT,BRAKE,OMNI***	
16C-	139971GT	BEARING KIT,OMNI***	

202.1 Non-steer End

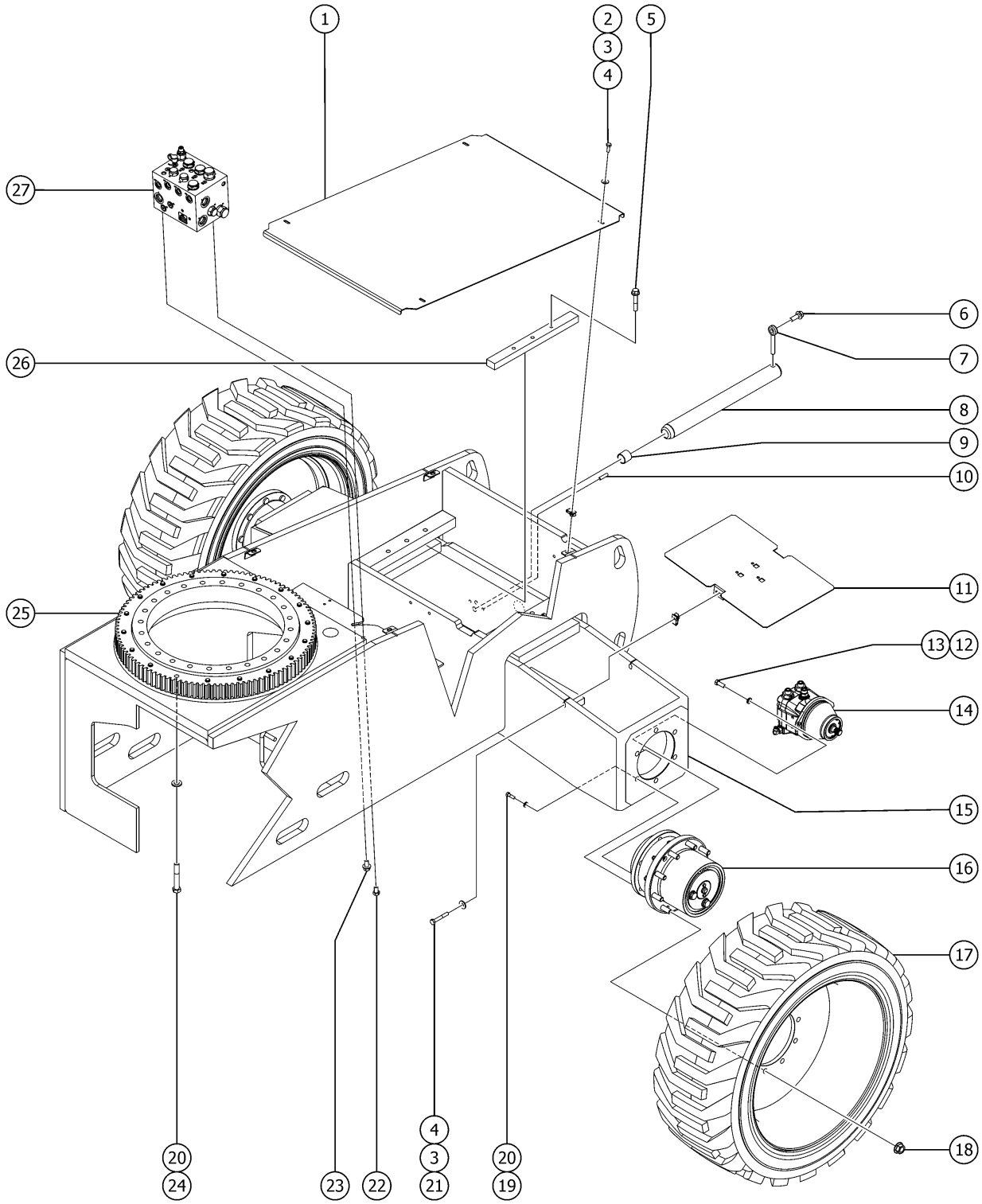

Item	Part No.	Description	Qty.
16C-	139972GT	SEAL KIT,GEARBOX,OMNI***	
16C-	147033GT	O-RING,PIPE PLUG KIT,OMNI***	
16C-	147034GT	PIPE PLUG KIT,OMNI***	
16C-	1260082GT	SPRING, HELICAL, RH	
17	77790GT	TIRE & WHEEL ASSY, RH, 355/55D625, FF RT, Foam-filled, right, to SN S65XCH-46419	2
17-	162216GT	TIRE & WHEEL ASSY,FOAM,RH from SN S65XCH-46420	2
17	77791GT	TIRE & WHEEL ASSY, LH, 355/55D625, FF RT, Foam-filled, left, to SN S65XCH-46419	2
17-	162217GT	TIRE & WHEEL ASSY,FOAM,LH from SN S65XCH-46420	2
17B	106647GT	TIRE & WHEEL ASSY,RH,FOAM,NM RT, Foam-filled, Non-marking, right	1
17B	106648GT	TIRE & WHEEL ASSY,LH,FOAM,NM RT, Foam-filled, Non-marking, left	1
17C	1288403GT	ASSEMBLY, WHEEL/TIRE,HF,20PR Turf, Hi-flotation, air-filled	2
17C-	94333GT	WHEEL,22.5X14.00*** for 1288403	
17C-	1286372GT	TIRE,41/18LLX22.5,20PR,TURF for 1288403	
17D	1288405GT	TIRE/WHEEL ASSY,HF W/SEALANT Turf, Hi-flotation, air-filled with sealant	2
18	77674GT	NUT,HEX,FLANGE 5/8-18,GRD 8 ZI	36
19	1255385GT	SCREW,HHC,5/8-11X2.25,8,ZAG	12
20	1256182GT	WASHER,FLAT,5/8,F436,HRD,ZAG	30
21	824063GT	SCREW,HHC,1/4-20X1.75,8,ZAG	4
22	1257453GT	SCREW,HHC,1/2-13X.875,8,ZAG	1
23	237830GT	SCREW,HHF,1/2-13X1,8,ZAG	1
24	1256170GT	SCREW,HHC,5/8-11X4,8,ZAG	18
25	63468GT	BEARING,TURNTABLE ROTATION	1
25-	227785GT	BEARING TURNTABLE SEAL***	
26	1310157GT	ASSY, BAR,AXLE ROTATION STOP, TRAFFIC BLACK	1
27		REF. MANIFOLD, TRACTION (refer to 402.1)	1

203.1 Oscillate Valve

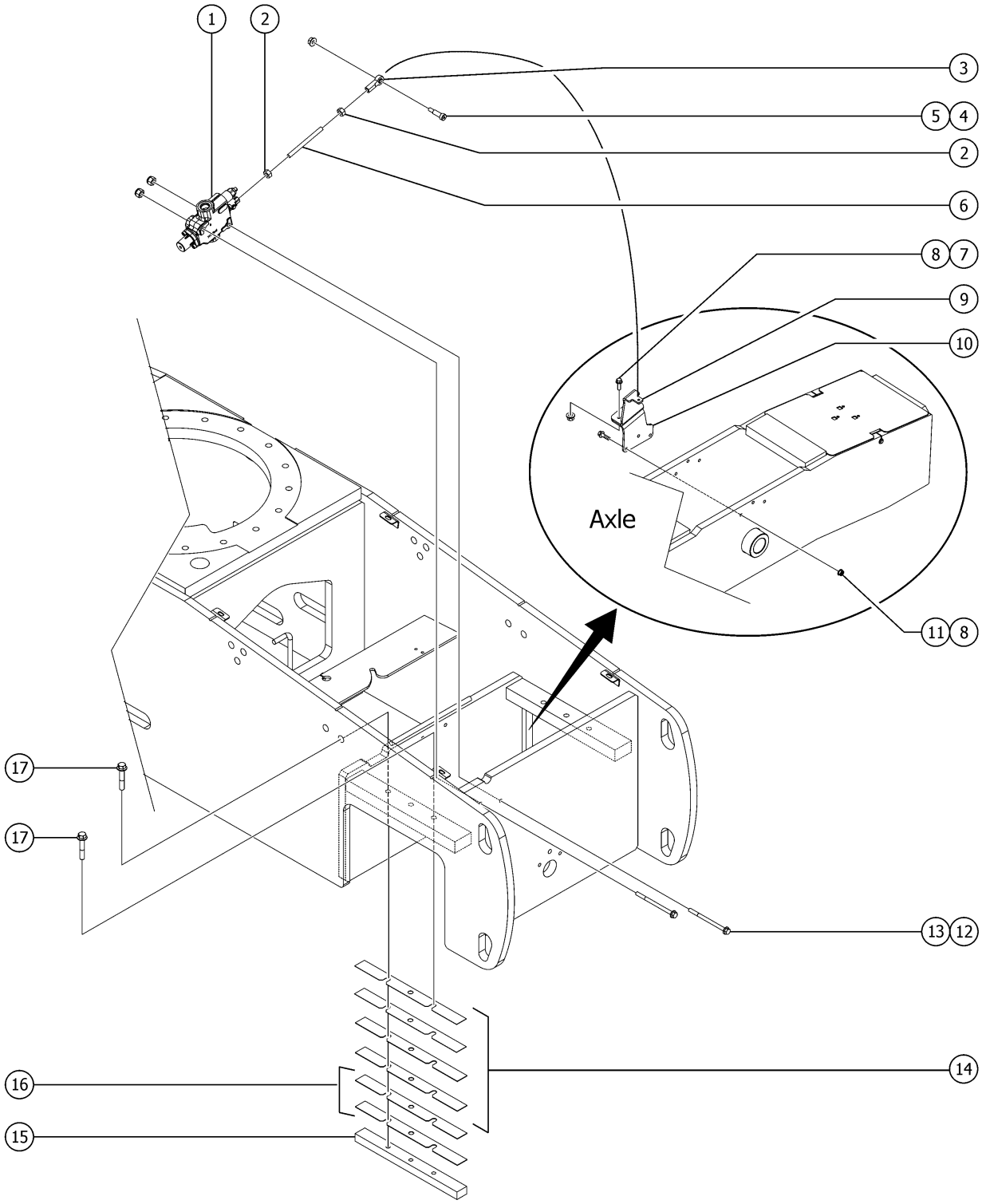

Item	Part No.	Description	Qty.
-	1327902GT	KIT, CLEVIS, VALVE/MOTOR SPOOL (includes items no 1,2,3,4,5,6,7,8,9,10,11,12,13,14,15,16,17)	1
1	1288398GT	VALVE, MOTOR SPOOL, 3 POS 4 WAY	1
2	824041GT	NUT, 1/4-28, 8, ZAG	2
3	81691GT	ROD END,BALL JOINT 1/4-28	1
4	1257076GT	BOLT,SHS,1/4-28X4,ZAG	1
5	1283004GT	NUT,NYLOCK FLG,10-24,A,ZAG	1
6	1283537GT	ROD, THREADED, 1/4X28X2.25	1
7	824091GT	SCREW, HHF, 3/8-16 X 1.25, 8, ZAG	2
8	1274322GT	NUT,NYLOCK FLG,3/8-16,F,ZAG	5
9	1288372GT	FORMING, TOP, OSCILLATE VALVE BRACKET	1
10	1288373GT	FORMING, BOTTOM, OSCILLATE VALVE BRACKET	1
11	1253478GT	SCREW,HHF,3/8-16X2,8,ZAG	3
12	1257419GT	SCREW,HHF,M8-1.25X80,DIN6921,10.9,ZAB	2
13	1283022GT	NUT,NYLOCK,M8-1.25,DIN985,10,ZAB	2
14	81609GT	SHIM,AXLE ROTATION STOP,22G	4
15	1310157GT	ASSY, BAR,AXLE ROTATION STOP, TRAFFIC BLACK	1
16	81610GT	SHIM,AXLE ROTATION STOP,16G	2
17	1255802GT	SCREW,HHF,1/2-13X2.5,8,ZAG	3

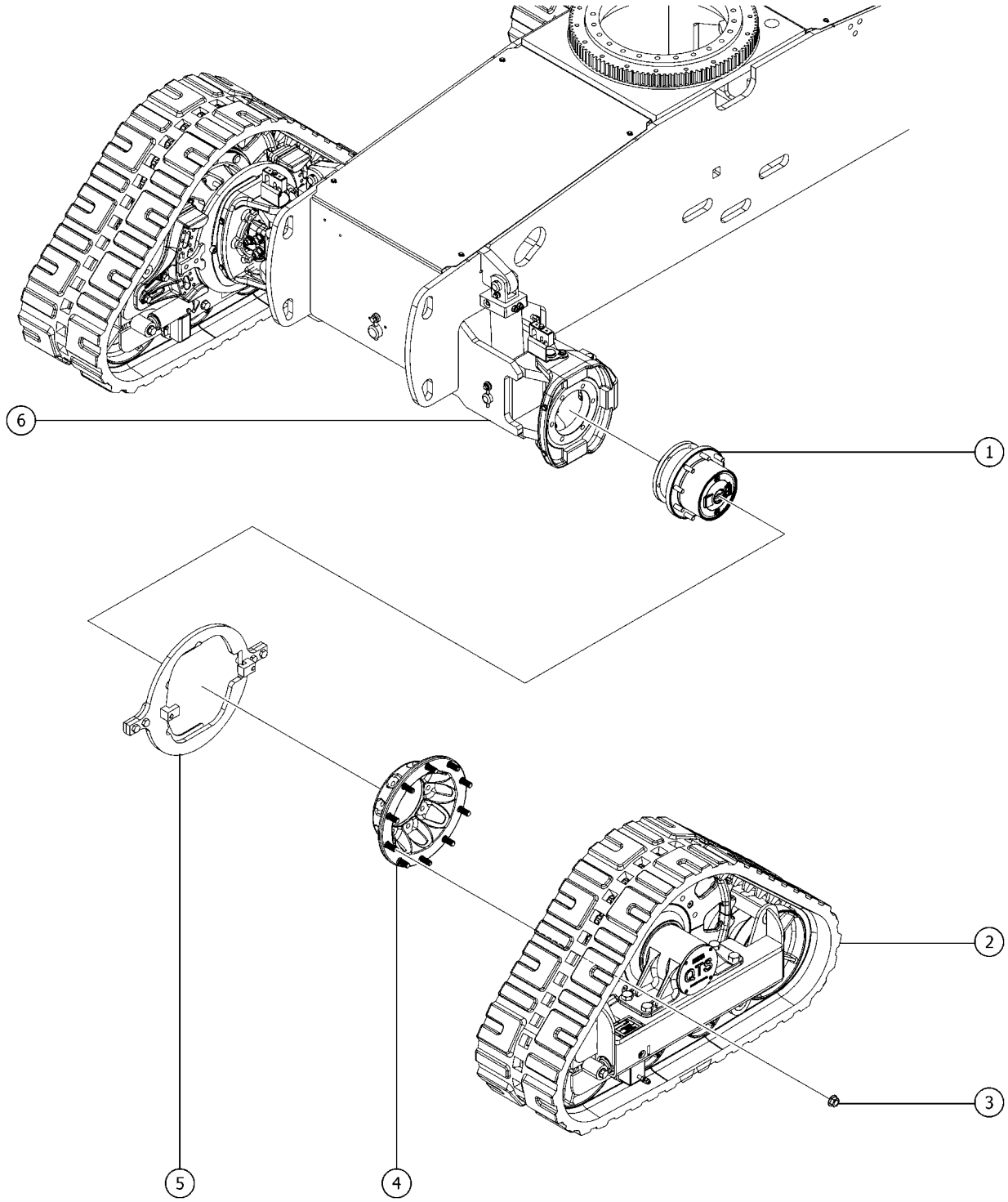
6
1
5
4
2
3

Item	Part No.	Description	Qty.
1	229817GT	WHEEL DRIVE 56:1	2
1-	102157GT	O-RING,.070 X .239,VITON 75D	
1-	102162GT	LUG,STUD/WHEEL (88887)	
1-	102131GT	DISCONNECT KIT (88887)	
1-	229818GT	SEAL KIT, DRIVE HUB	
1-	215340GT	LOCKRING, RR	
1-	102516GT	RING,RETAINING,INTERNAL	
1-	215642GT	BRAKE KIT (88886)***	
1-	229931GT	SEAL,LIP	
1-	102158GT	O-RING,.103 X 4.737,VITON, 75D	
1-	102166GT	VALVE,CHECK,30 PSI	
1-	102167GT	SHAFT,INPUT DRIVE HUB	
1-	106098GT	SEAL KIT,MOTOR,LC/KC***	
1-	27067GT	SEAL,SHAFT-SUNDSTRAND***	
1-	77674GT	NUT,HEX,FLANGE 5/8-18,GRD 8 ZI	
1-	88884GT	MOTOR,PISTON,30CC,4WD***	
2		ASSEMBLY,TRAX UNIT,LEFT,400MM (15.75 IN) WIDE TRACK (Left) (Not available to order. Order lower level parts)	1
2B		ASSEMBLY,TRAX UNIT,RIGHT,400MM (15.75 IN) WIDE TRACK (Right) (Not available to order. Order lower level parts)	1
3	77674GT	NUT,HEX,FLANGE 5/8-18,GRD 8 ZI	20
4	139002GT	SPACER, 9 BOLT	2
4-	139140GT	STUD, 3/4-16 UNF X 2-1/2 LG for 139002	
5	139001GT	ROTATIONAL LIMITER FRONT LEFT (Left)	1
5B	139000GT	ROTATIONAL LIMITER FRONT RIGHT (Right)	1
6	1283785GT	WELDMENT,FRONT AXLE, TRAX, 400MM (15.75 IN) WIDE TRACK	1

205.1 TraX Option Non-steer End

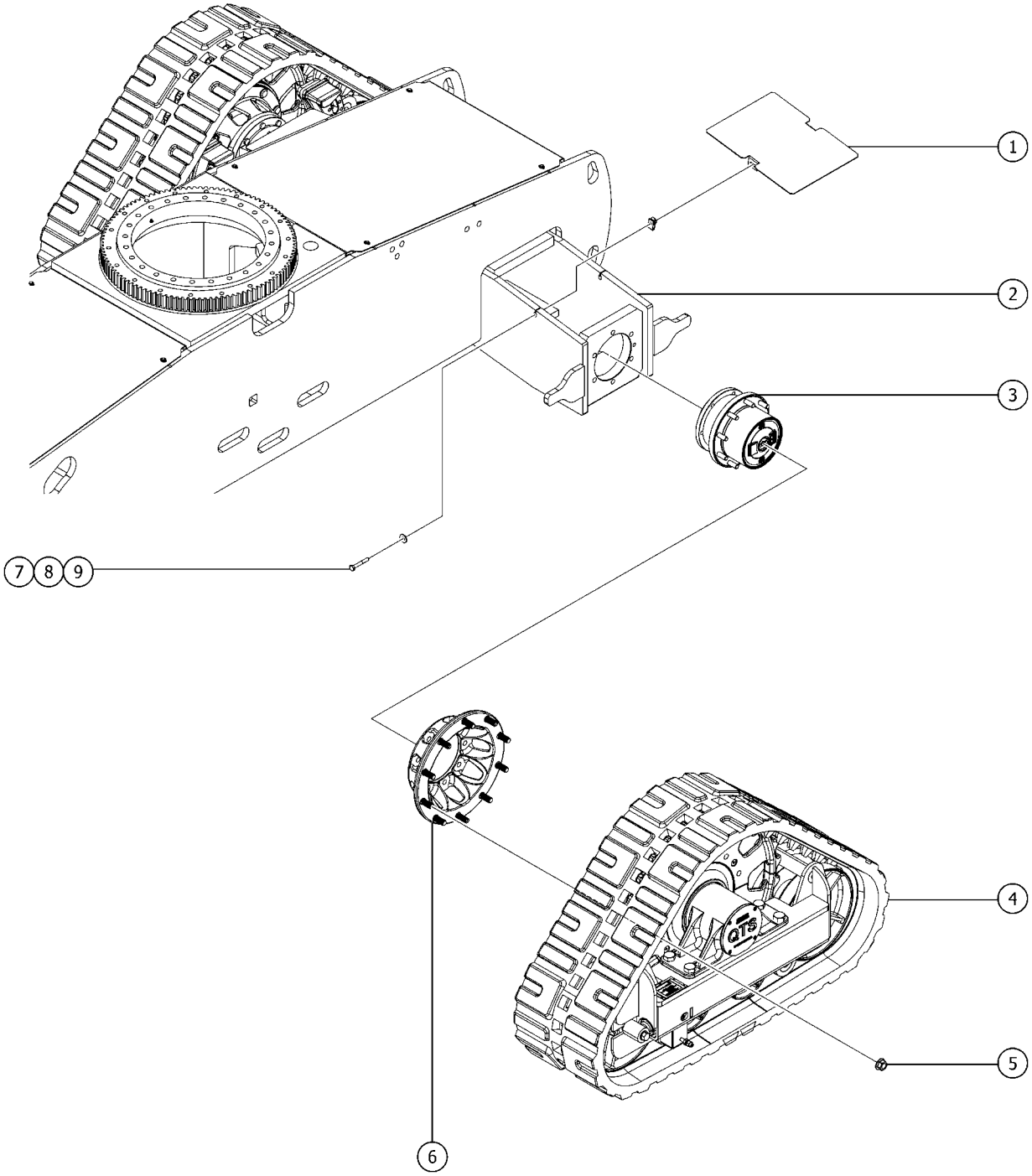

Item	Part No.	Description	Qty.
1	1255714GT	COVER, REAR AXLE	2
2	1283783GT	WELDMENT,REAR AXLE,TRAX, 400MM (15.75 IN) WIDE TRACK	1
3	229817GT	WHEEL DRIVE 56:1	2
3-	102157GT	O-RING,.070 X .239,VITON 75D	
3-	102162GT	LUG,STUD/WHEEL (88887)	
3-	102131GT	DISCONNECT KIT (88887)	
3-	229818GT	SEAL KIT, DRIVE HUB	
3-	215340GT	LOCKRING, RR	
3-	102516GT	RING,RETAINING,INTERNAL	
3-	215642GT	BRAKE KIT (88886)***	
3-	229931GT	SEAL,LIP	
3-	102158GT	O-RING,.103 X 4.737,VITON, 75D	
3-	102166GT	VALVE,CHECK,30 PSI	
3-	102167GT	SHAFT,INPUT DRIVE HUB	
3-	106098GT	SEAL KIT,MOTOR,LC/KC***	
3-	27067GT	SEAL,SHAFT-SUNDSTRAND***	
3-	77674GT	NUT,HEX,FLANGE 5/8-18,GRD 8 ZI	
3-	88884GT	MOTOR,PISTON,30CC,4WD***	
4		ASSEMBLY,TRAX UNIT,LEFT,400MM (15.75 IN) WIDE TRACK (left) (Not available to order. Order lower level parts)	1
4B		ASSEMBLY,TRAX UNIT,RIGHT,400MM (15.75 IN) WIDE TRACK (right) (Not available to order. Order lower level parts)	1
5	77674GT	NUT,HEX,FLANGE 5/8-18,GRD 8 ZI	20
6	139002GT	SPACER, 9 BOLT	2
6-	139140GT	STUD, 3/4-16 UNF X 2-1/2 LG for 139002	
7	824063GT	SCREW,HHC,1/4-20X1.75,8,ZAG to SN S65XCH-46209	4
7-	1255642GT	SCREW,HHC,5/16-18X1.75,8,ZAG from SN S65XCH-46210	
8	824113GT	WASHER,FLAT,USS,1/4,ZAG to SN S65XCH-46209	4
8-	825358GT	WASHER,FLAT,5/16,USS,ZAG from SN S65XCH-46210	
9	56912GT	SPRING CLIP,1/4-20,.025-.15X.54,ZAG to SN S65XCH-46209	4

205.1 TraX Option Non-steer End

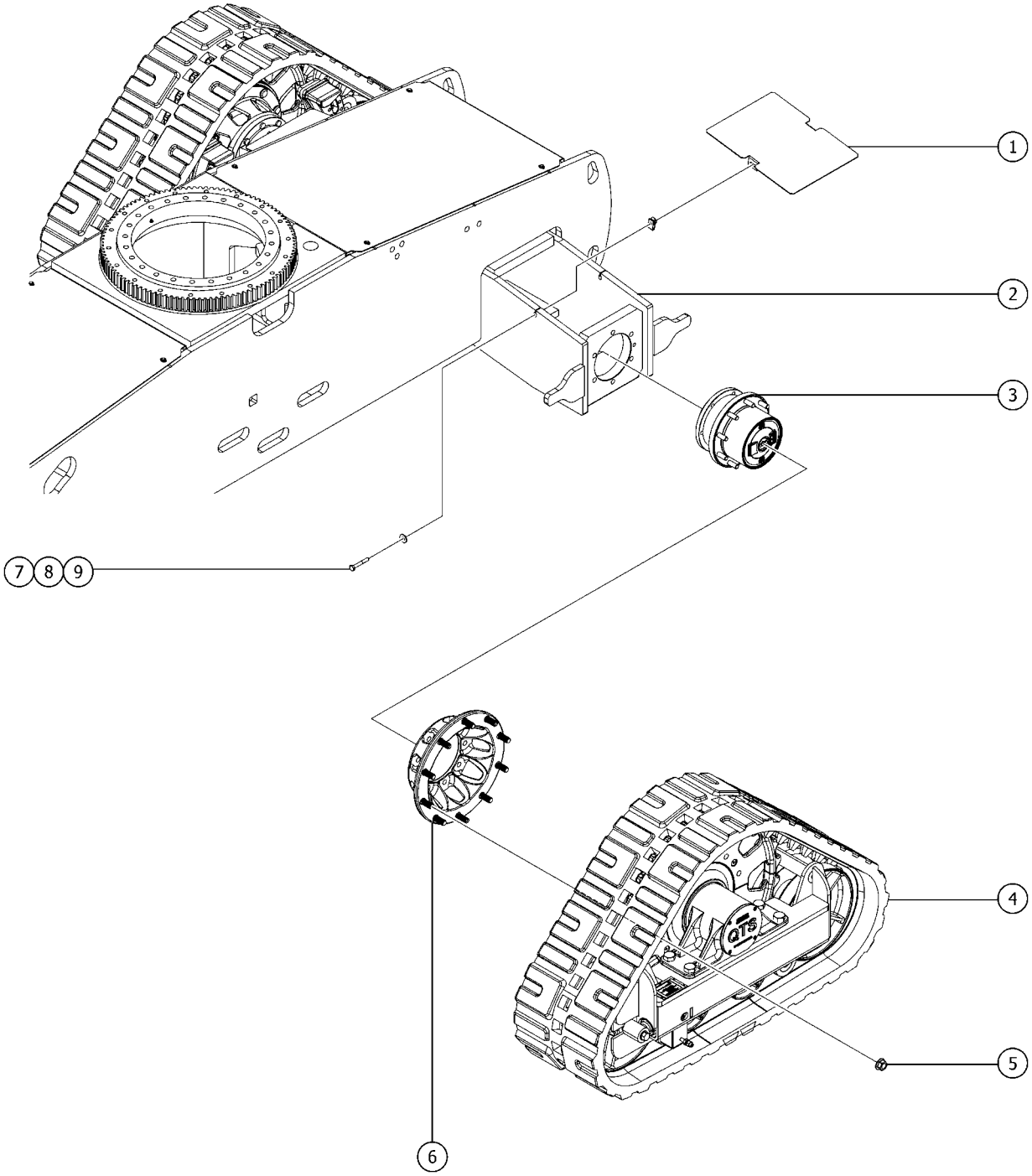

Item	*Part No.*	*Description*	*Qty.*
9-	36456GT	SPRING CLIP,5/16-18,.025-.15X.83,ZAG from SN S65XCH-46210	

206.1 TraX Option Components

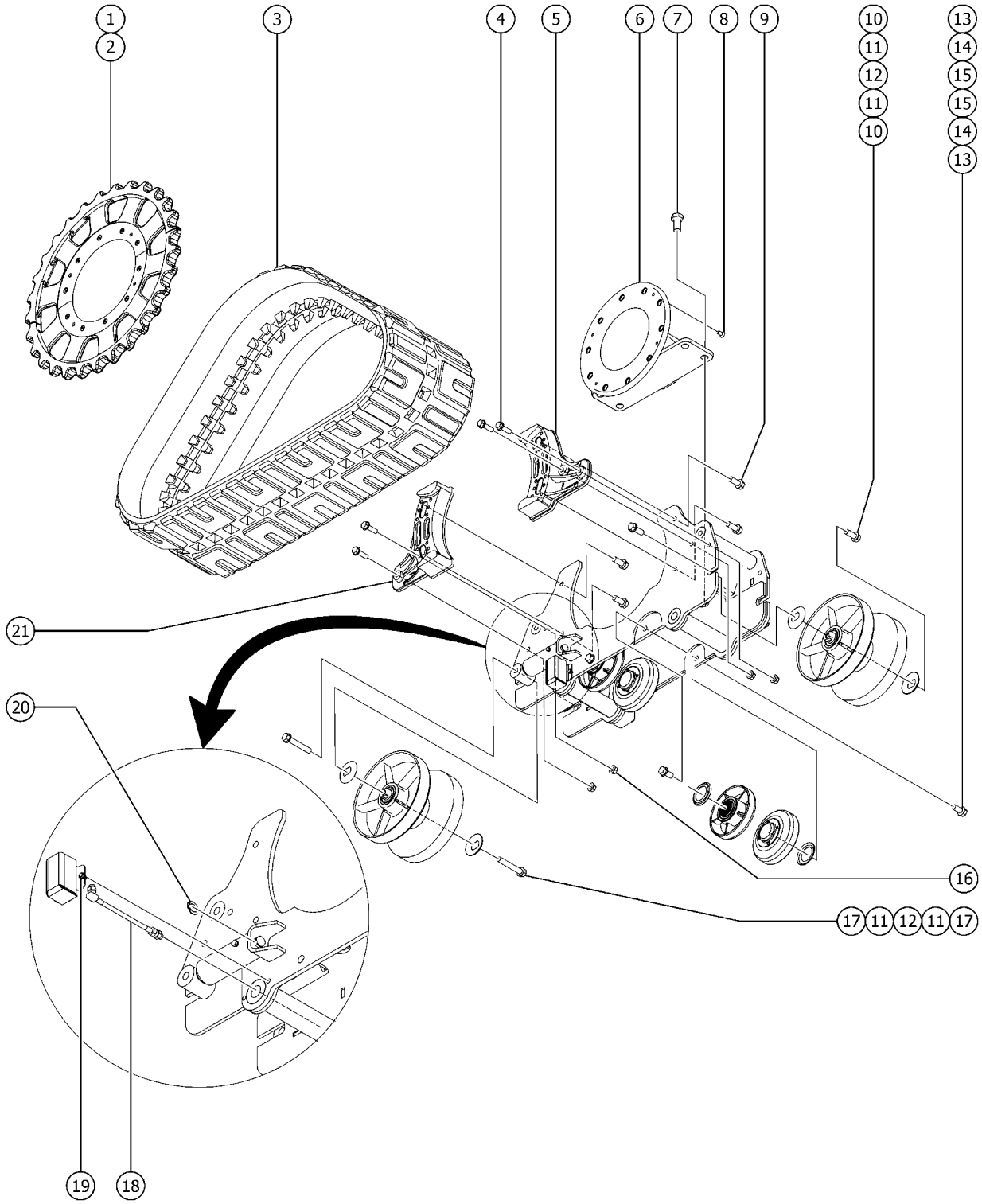

Item	Part No.	Description	Qty.
A	128949GT	FITTING, 1/4"NPT STR ZERK	1
1	128922GT	SPROCKET, MACH. HALF RIGHT	1
2	128923GT	SPROCKET, MACH. HALF LEFT	1
3	1287242GT	TRACK,RUBBER,400MM (15.75 IN) WIDE	1
4	111155GT	SCREW,FLANGE,HHC,5/8-11X2,GR8	4
5	128925GT	CAST, LIMITER STOP BRKT R	1
6	128928GT	HUB ASSEMBLY	1
6-	1313693GT	SPINDLE, MAIN	1
6-	1313694GT	BEARING, TAPERED ROLLER	1
6-	1313695GT	HUB, MAIN CAST	1
6-	1313696GT	NUT, SPANNER	1
6-	1313697GT	SEAL, HUB	1
6-	1313698GT	COVER, DUST, AWP	1
6-	1313699GT	O-RING	1
6-	1313700GT	SNAP RING	1
6-	1313701GT	PIN, PLUNGER	1
6-	1313702GT	SPRING, COMPRESSION, .53ID X 1.94 LONG	1
6-	1313703GT	PIN, SPRING 3/16 DIA X .625 LONG	2
6-	1313704GT	O-RING .484 ID X .139 CROSS SECTION	2
6-	1313705GT	COVER, BRAKE RELEASE	1
6-	1313706GT	O-RING, 1.00 DIA X .094 CROSS SECTION	1
6-	1313707GT	SPACER, RUBBER	1
6-	1313708GT	SCREW, HFS, 1/4-20 X .38, GR8, YZ	2
6-	1313709GT	SCREW, SHCS, 5/16-18 X .75, GR8, YZ	4
7	128913GT	BOLT,HHC,1-14X2.0"GR8 PLT	4
8	128914GT	SCREW, FHSC, 1/2-13X1.00	4
9	128912GT	BOLT,FLANGE,5/8-11X1.5"GR8 PLT	4
10	128910GT	BOLT,FLANGE,3/4-10X1.75GR8 PLT	2

206.1 TraX Option Components

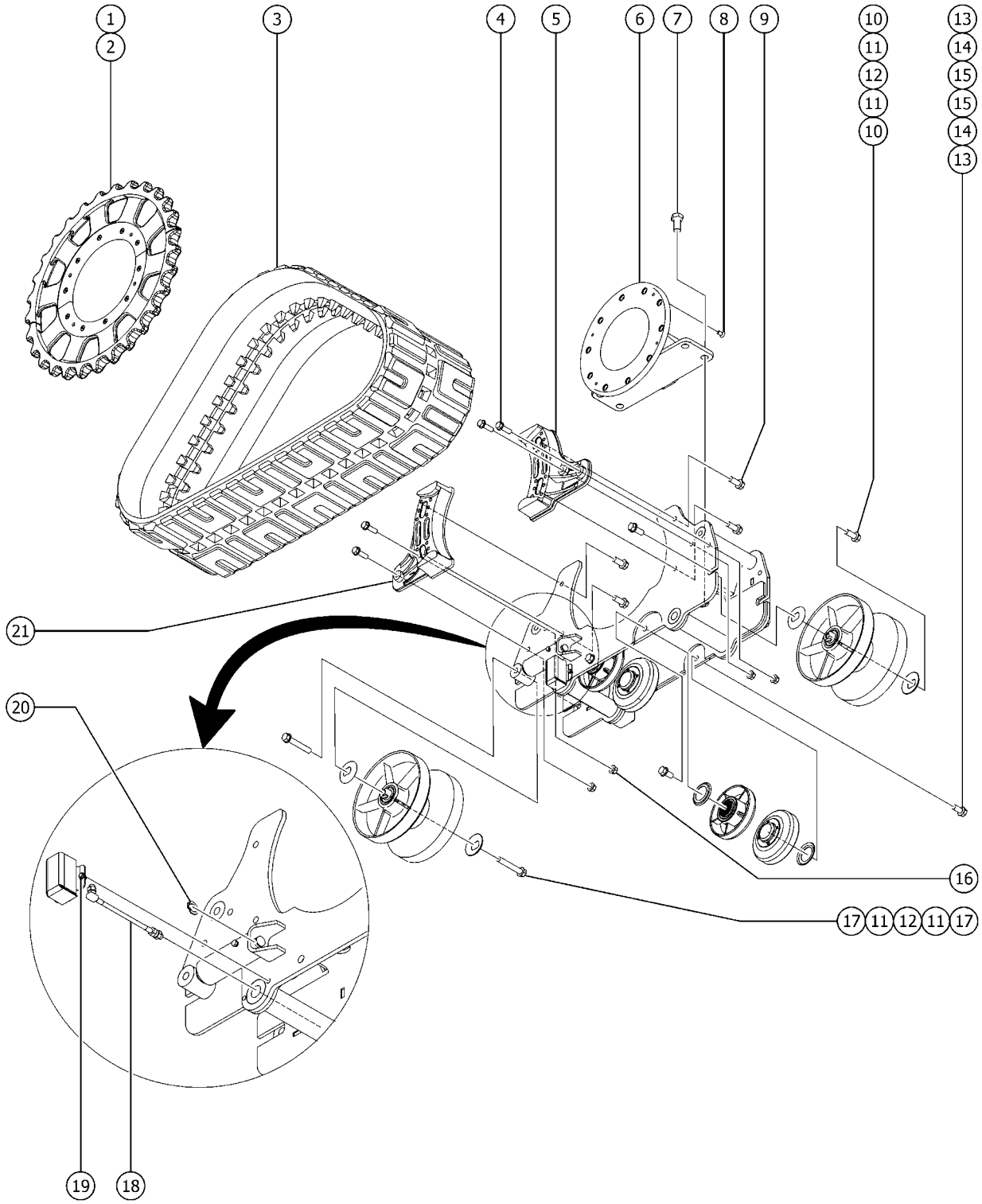

Item	Part No.	Description	Qty.
11	128920GT	COVER, DUST	4
12	128917GT	END BOGEY	2
13	128909GT	BOLT,FLANGE,3/4-10X1.5"GR8 PLT	4
14	128921GT	GUARD, SEAL	4
15	128918GT	SPLIT BOGEY	4
16	128916GT	NUT,FLANGE,LOCK,5/8-11GR8 PLT	4
17	128911GT	BOLT,FLANGE,3/4-10X4.5"GR8 PLT	2
18	128927GT	HYD. HOSE ASSEMBLY 3000 PSI	1
19	128955GT	BOLT,FLANGE,5/16-18X.50 GR5	4
20	128919GT	SNAP RING	2
21	128924GT	CAST, LIMITER STOP BRKT L	1

301.1 Tank Side - View 1

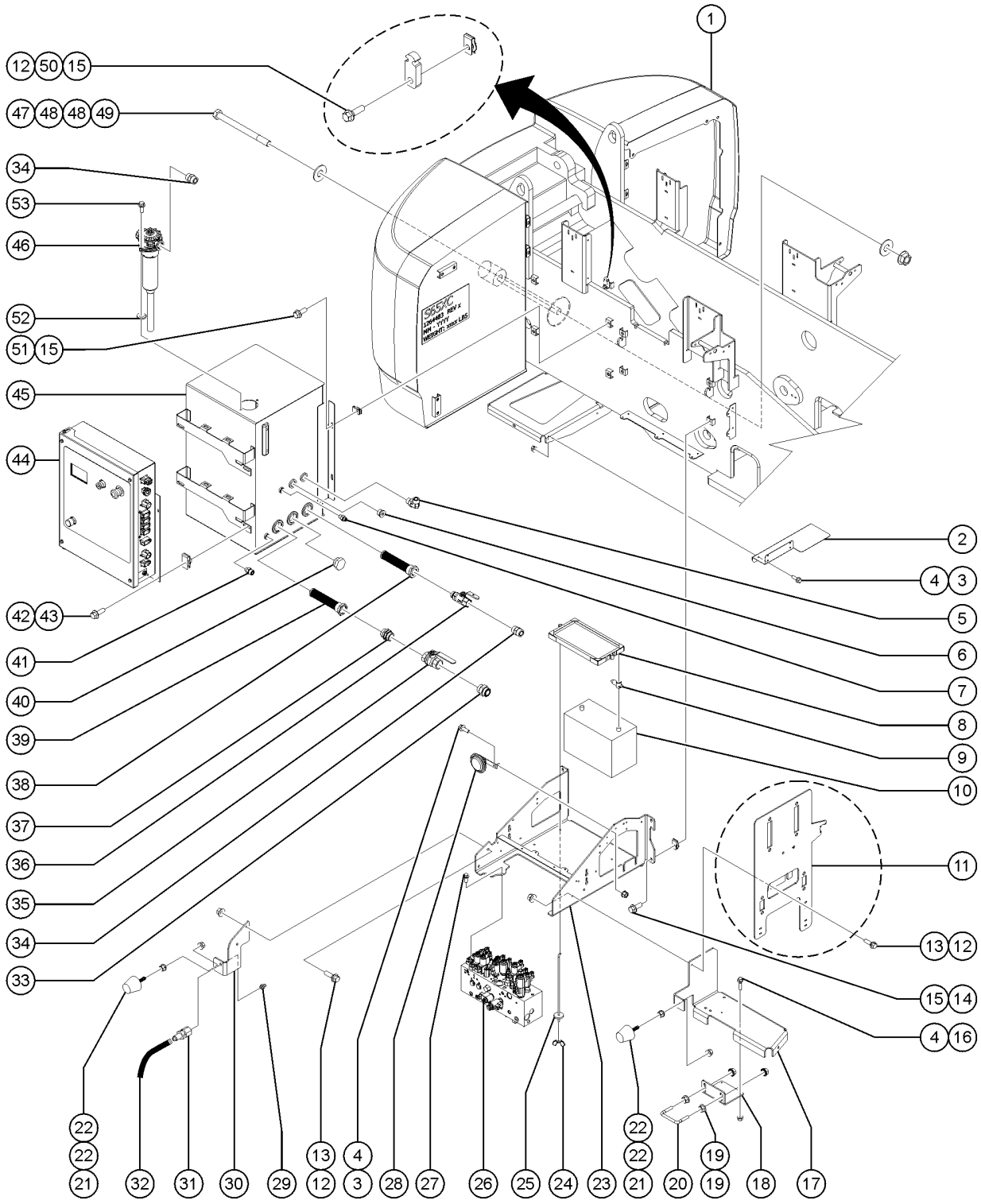

301.1 Tank Side - View 1

Item	Part No.	Description	Qty.
A	1289561GT	BRACKET, TELEMATICS	
A	1289520GT	MODULE, TELEMATICS, ZTR, M7, NORTH AMERICA	
A	1289521GT	MODULE, TELEMATICS, ZTR, M7, EMEA/APAC	
1	1264483GT	COUNTERWEIGHT, S65XC S-65 XC	1
1B	1276412GT	COUNTERWEIGHT, S60XC S-60 XC	1
2	1283547GT	FORMING, HARNESS SUPPORT, S60/65XC	1
3	824078GT	SCREW,HHF,1/4-20X.75,8,ZAG	3
4	1277924GT	NUT,NYLOCK FLG,1/4-20,F,ZAG	5
5	48959GT	FITTING,ELBOW,90D,520220-12 to SN S65XCH-45393	1
5-	48878GT	ELBOW,90D,520220-16-12 from SN S65XCH-45394	
6	59371GT	PLUG, HEX SOCKET, 090109B-8*	1
7	48912GT	CONN,520120-4-6***	1
8	30144GT	BATTERY HOLD DOWN,GROUP 31	1
9	8910GT	BOOT,CABLE TERM,MED.RED,4/0	1
10	30143GT	BATTERY,12V,1000 CCA GRP 31 to SN S65XCH-46982	1
10B	1303581GT	BATTERY, 12V, 950CCA, FLA from SN S65XCH-46983	1
11		Ref. ECU BRACKET (refer to 302.1)	
12	824091GT	SCREW, HHF, 3/8-16 X 1.25, 8, ZAG	7
13	1274322GT	NUT,NYLOCK FLG,3/8-16,F,ZAG	5
14	824090GT	SCREW,HHF,3/8-16X1,8,ZAG to SN S65XCH-44999	8
14B	824090GT	SCREW,HHF,3/8-16X1,8,ZAG from SN S65XCH-45000	6
15	29868GT	SPRING CLIP,3/8-16,.05-.20X.73,ZAG	10
16	824079GT	SCREW,HHF,1/4-20X1,8,ZAG	2
17	1260112GT	FORMING, MOUNT, LATCH	1
18	1260113GT	FORMING, BRACKET, LATCH	1
19	1261724GT	NUT,SERRATED,1/2-13,8,ZAG	4
20	1259855GT	UBOLT, 0.4724 IN D X 4 IN L	1
21	1261277GT	RUBBER BUMPER, 1.25 X 1.25 IN	2

301.1 Tank Side - View 1

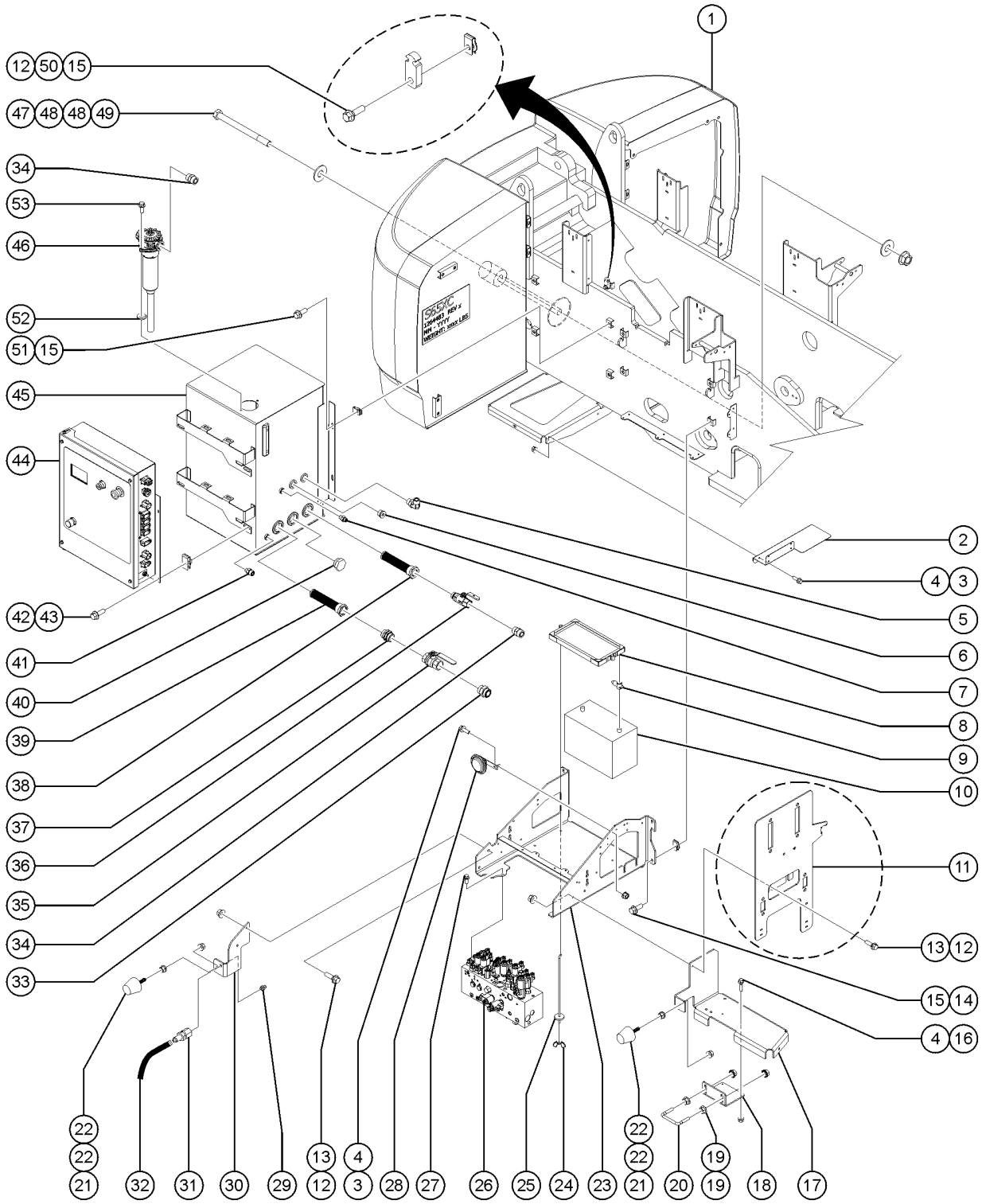

301.1 Tank Side - View 1

Item	Part No.	Description	Qty.
22	1274167GT	NUT,NYLOCK FLG,5/16-18,F,ZAG	4
23	1283545GT	WELDMENT, BATT/MANIF TRAY, S60/65XC	1
24	8170GT	NUT,WING,1/4-20	2
25	45708GT	HOOK,BATT HOLD DOWN,10"	2
26		Ref. FUNCTION MANIFOLD (refer to 401.1)	
27	1253498GT	SCREW,HHF,1/2-13X1.5,8,ZAG	2
28	81578GT	HORN,12VDC,SPADE TERMINALS***	1
29	94643GT	ZERK,GREASE,5/16-24,STRAIT to SN S65XCH-45958	1
29-	28646GT	ZERK,GREASE,1/8 NPT from SN S65XCH-45959	1
30	1253825GT	FORMING, BRACKET, COVER STOP	1
31	48885GT	CONNECTOR,BULKHEAD,FEMALE-4	1
32	49176-8638GT	HOSE ASSY,-4,STR FEM,90 FEM (grease hose)	1
33	75654GT	CONN,520120-20	1
34	48984GT	CONN, 520120-16	2
35	101494GT	VALVE,BALL,FSAE-20,FSAE-20	1
36	48996GT	VALVE,BALL,16 MSAE-16 FSAE***	1
37	61263GT	UNION,STR.THREAD 20	1
38	101490GT	STRAINER,16 SAE F/24 SAE M	1
39	101491GT	STRAINER,20 SAE F/24 SAE M***	1
40	1282197GT	PLUG,SAE-24,EXTERNAL HEX	1
41	48943GT	FITTING,CONN,520120-8-6	1
42	1256855	SCREW,HHF,1/4-20X.625,8,ZAG	4
43	56912GT	SPRING CLIP,1/4-20,.025-.15X.54,ZAG	4
44		Ref. GROUND CONTROL BOX (refer to 305.1 and 306.1)	1
45	1276519GT	ASSY,HYDRAULIC TANK,S60/65XC (includes items 5-7, 14 and 33-46)	1
45-	1276459GT	TANK, HYDRAULIC 40 GAL (includes items 38 and 39)	
46	1281808GT	FILTER ASSY, INTANK, 49GPM to SN S65XCH-44999	1
46-	1283103GT	KIT, FILTER ELEMENT, HYD TANK RETURN	

301.1 Tank Side - View 1

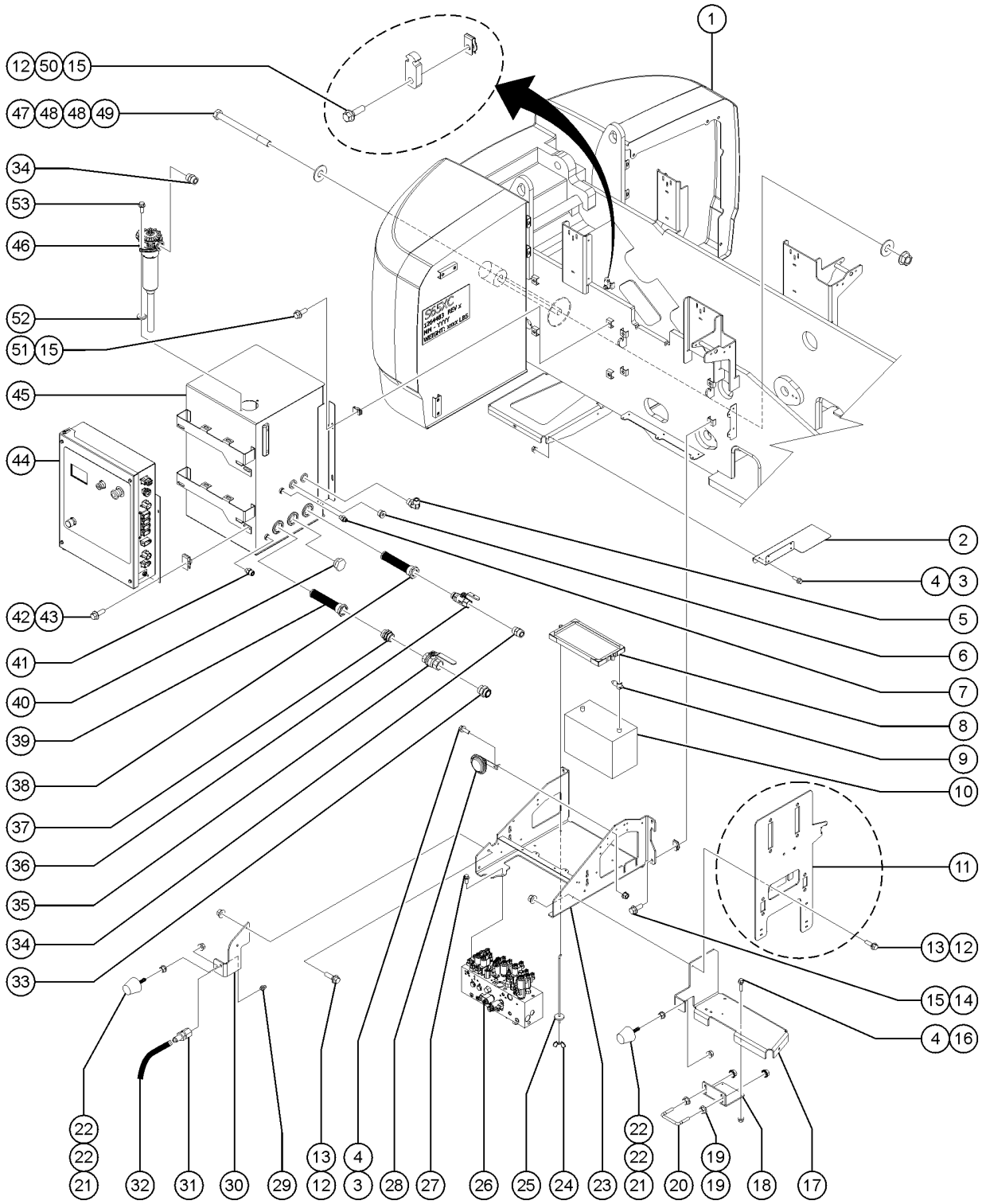

301.1 Tank Side - View 1

Item	Part No.	Description	Qty.
46-	1282117GT	FILTER,ELEMENT,HYD TANK,RETURN	
46-	1317967GT	SEAL KIT, FILTER ASSY - INTANK, 49GPM	1
46B	1316958GT	OPTIONS, FILTER ASSY. S65XC from SN S65XCH-45000	1
46B-	1281808GT	FILTER ASSY, INTANK, 49GPM	1
46B-	1316867GT	FILTER ASSY, INTANK, S65XC	1
47	1268832GT	SCREW,HHC,1-8X19.5,2,ZAG	1
48	1256469GT	WASHER,FLAT,1.0,USS,ZAG to SN S65XCH-46083	2
48	1256469GT	WASHER,FLAT,1.0,USS,ZAG from SN S65XCH-46084	1
49	1283024GT	NUT,NYLOCK,1-8,8,ZAG to SN S65XCH-46083	1
49-	824031GT	NUT,TL FLG,1-8,G,ZAG from SN S65XCH-46084	1
50	822692GT	CLAMP, WIRE, 16/2	2
51	825354GT	SCREW,HHF-S,3/8-16X7/8,8.2,ZAG	4
52	824144GT	WASHER,FLAT,M8,DIN125,ZAB from SN S65XCH-45000	2
53	824136GT	SCREW, HHC, M8-1.25 X 25, DIN933, 10.9, ZAB from SN S65XCH-45000	2

302.1 Tank Side - View 2

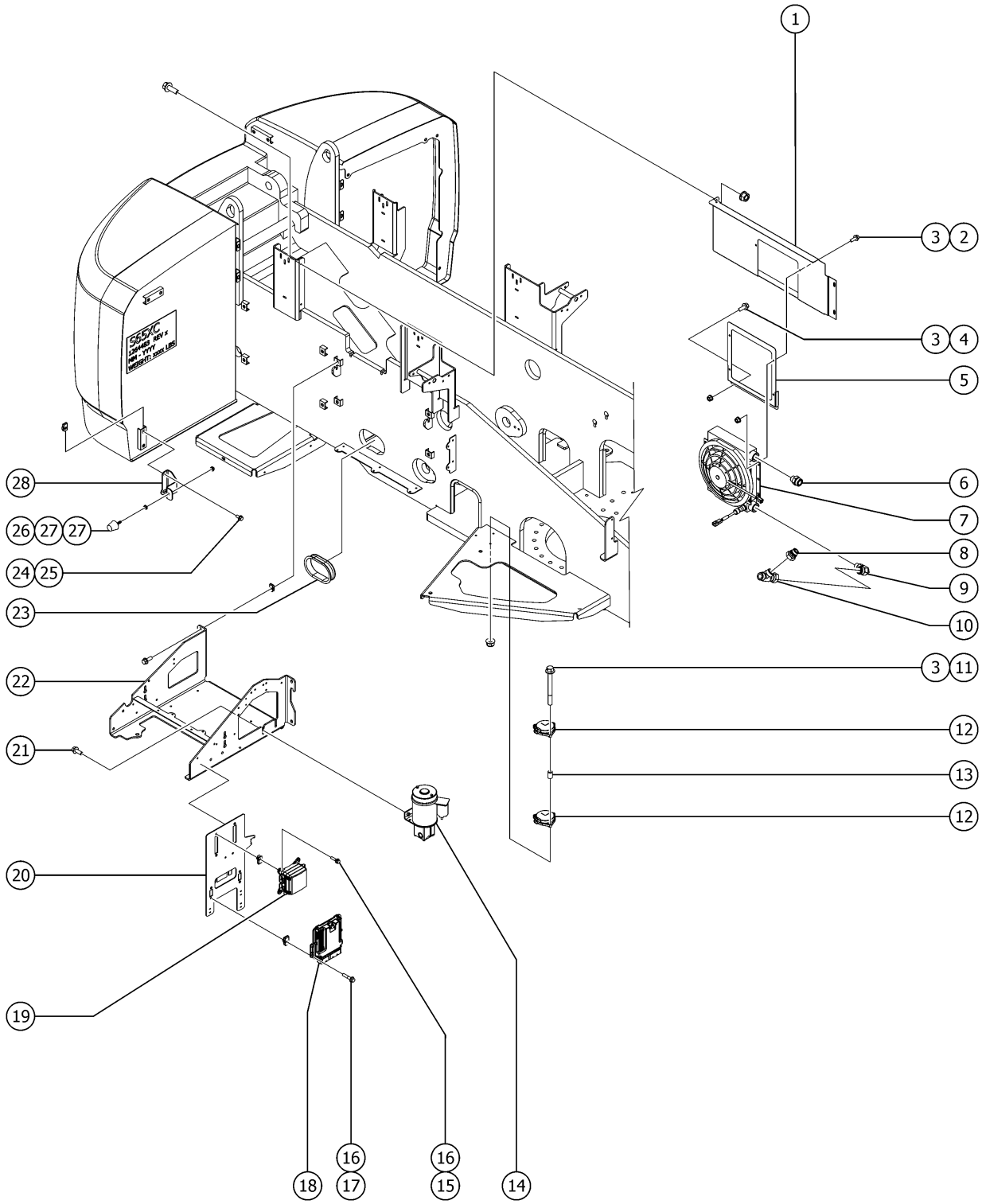

302.1 Tank Side - View 2

Item	Part No.	Description	Qty.
1		Ref. FORMING, BULKHEAD, S60 TS FRON Refer to 308.1	
2	824078GT	SCREW,HHF,1/4-20X.75,8,ZAG	4
3	1277924GT	NUT,NYLOCK FLG,1/4-20,F,ZAG	9
4	824081GT	SCREW, HHF, 1/4-20 X 1.5, 8, ZAG	2
5	77693GT	FORMING,OIL COOLER MOUNT	1
6	49519GT	CONN,520120-16-12	1
7	71259GT	OIL COOLER W/FAN, 12VDC	1
7-	75854GT	FAN - VENTED	
7-	75855GT	THERMOSTAT -OIL COOLER (71259)	
8	101293GT	REDUCER,520123-16-12	1
9	48878GT	ELBOW,90D,520220-16-12	1
10	42787GT	TEE,RUN,SWIVEL,520432-16	1
11	824083GT	SCREW,HHF,1/4-20X2.5,8,ZAG	3
12	823368GT	SENSOR,LEVEL,UNIVERSAL	2
13	8149GT	SPACER,NYLON .257 X .5 X .75"	3
14	146180GT	ASSEMBLY, AUX POWER UNIT, 12VDC	1
14-	1264969GT	MOTOR, 12VDC, I-TERMINAL	
14-	146181GT	SOLENOID, APU	
14-	146182GT	GROUND WIRE,SOLENOID	
14-	37187GT	SEAL KIT, 37185 PUMP	
14-	37192GT	COUPLER, PUMP / MOTOR (36179)	
14-	58489GT	PUMP ASSY,AUX.POWER UNIT 89617	
14-	62414GT	SEAL, SHAFT, 60511 APU	
15	824079GT	SCREW,HHF,1/4-20X1,8,ZAG	4
16	56912GT	SPRING CLIP,1/4-20,.025-.15X.54,ZAG	8
17	824080GT	SCREW, HHF, 1/4-20 X 1.25, 8, ZAG	4
18	214795GT	ECM, DEUTZ (must contact service parts to order, SN information is required)	1
19	1269738GT	MODULE, VEC, ALC600	1

302.1 Tank Side - View 2

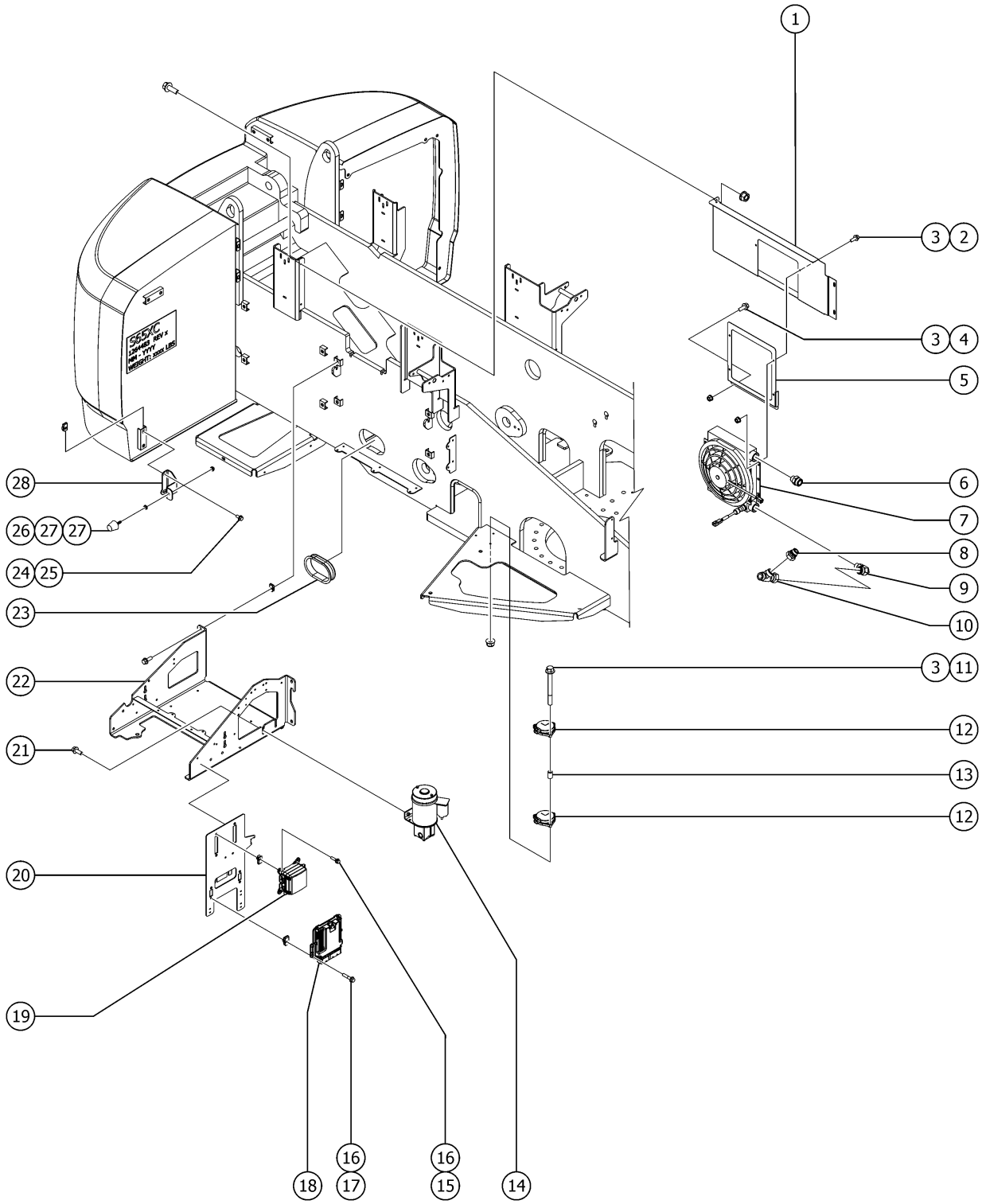

302.1 Tank Side - View 2

Item	Part No.	Description	Qty.
19A-	1251502GT	FUSE, ATM, 10AMP	
19A-	1251503GT	RELAY, 12V MICRO, 35AMP	
19A-	1251504GT	DIODE, 6A 22903-6V	
19A-	1251505GT	TOOL, FUSE PULLER, ATM	
19A-	1251506GT	FUSE, ATM, 5AMP	
19A-	1279520GT	CIRCUIT BREAKER 20A,TIII, ATC, 14VDC	
19A-	1279521GT	CIRCUIT BREAKER 15A,TIII, ATC, 14VDC	
19A-	1279522GT	RELAY SOLID STATE, 12V, 20A (B120-7022)	
19A-	1280401GT	CIRCUIT BREAKER, 30AMP MINI	
19B	1286594GT	MODULE, VEC, RLYS AND FUSES (Perkins 404F-E22T)	1
19B-	1251500GT	FUSE, ATM, 20AMP	
19B-	1251501GT	FUSE, ATM, 30AMP	
19B-	1251502GT	FUSE, ATM, 10AMP	
19B-	1251503GT	RELAY, 12V MICRO, 35AMP	
19B	1251504GT	DIODE, 6A 22903-6V	
19B-	1251505GT	TOOL, FUSE PULLER, ATM	
19B-	1251506GT	FUSE, ATM, 5AMP	
19B-	1279520GT	CIRCUIT BREAKER 20A,TIII, ATC, 14VDC	
19B-	1280401GT	CIRCUIT BREAKER, 30AMP MINI	
19B-	1288984GT	FUSE, ATM, 1AMP	
20	823074GT	WELDMENT,ECU MOUNT,DEUTZ D2.9	1
20A-	1253477GT	SCREW,PHPM,4-40X.5,ZAG	
20A-	1259338GT	WASHER,LOCK,#4,ZAG	
20A-	1259339GT	NUT,4-40,ZAG	
20B	1286395GT	WELDMENT, ECU BRACKET, S60 (Perkins 404F-E22T)	1
20B-	824078GT	SCREW,HHF,1/4-20X.75,8,ZAG	
20B-	56912GT	SPRING CLIP,1/4-20,.025-.15X.54,ZAG	
21	824090GT	SCREW,HHF,3/8-16X1,8,ZAG	2

302.1 Tank Side - View 2

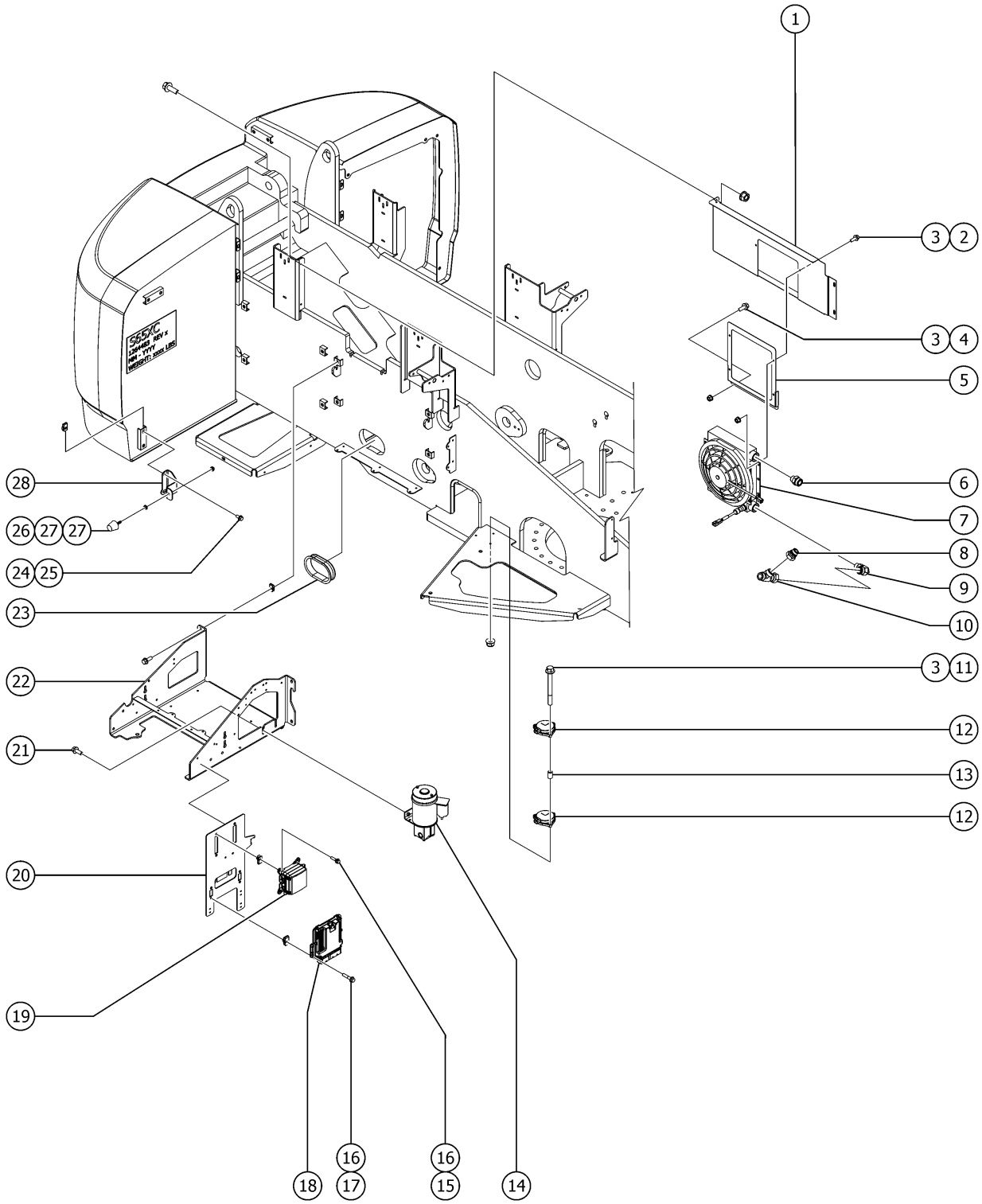

302.1 Tank Side - View 2

Item	Part No.	Description	Qty.
22		Ref. WELDMENT, BATT/MANIF TRAY, S60/65XC ..... Refer to 301.1	
23	53386GT	GUARD, HOSE PROTECTOR	2
24	824089GT	SCREW, HHF, 3/8-16 X .75, 8, ZAG	2
25	29868GT	SPRING CLIP,3/8-16,.05-.20X.73,ZAG	2
26	1261277GT	RUBBER BUMPER, 1.25 X 1.25 IN	1
27	1255805GT	NUT,SERRATED,5/16-18,8,ZAG	2
28	1259002GT	FORMING, TS COVER BUMPER	1

303.1 Tank Side - Diesel Fuel Tank Installation

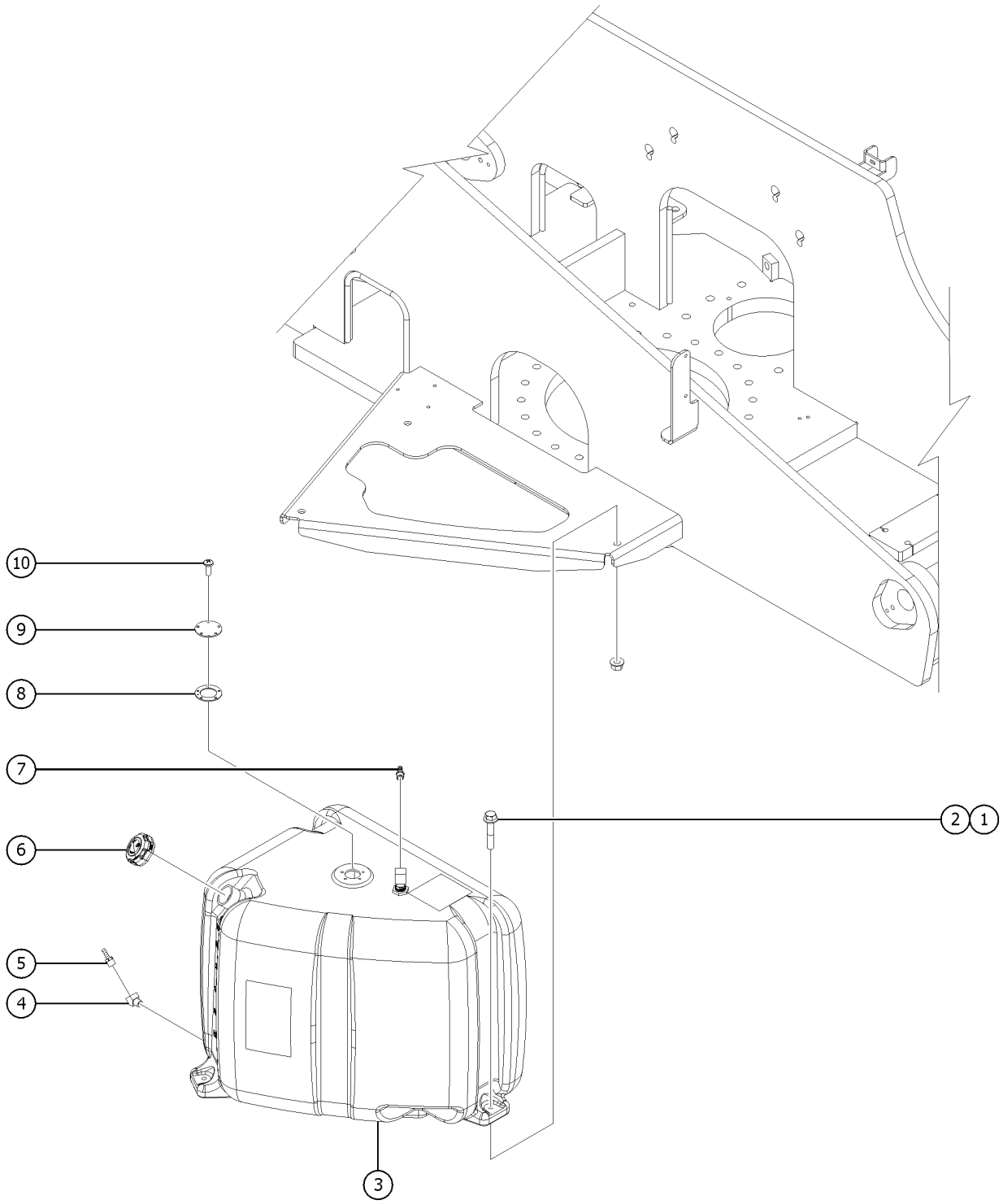

Item	Part No.	Description	Qty.
1	1253478GT	SCREW,HHF,3/8-16X2,8,ZAG	3
2	824029GT	NUT, TL FLG, 3/8-16, G, ZAG	3
3	1255643GT	TANK, FUEL, Z80 35 GAL to SN S65XCH-45353	1
3-	54324GT	FITTING,BULKHEAD,3/8NPT,FUELTK	
3-	823356GT	TUBE,FUEL RETURN,3/8X3/8X23.5	
3A	1274331GT	ASSY, FUEL TANK, 35GAL, DIESEL from SN S65XCH-45354	1
3A-	1271770GT	SENSOR, FUEL LEVEL, 30" DIESEL	
3A-	824215GT	SCREW, PHPM, 10-32 X .75, ZAG	
4	22348GT	ELBOW,130339-6-6	1
5	824471GT	FITTING,3/8 NPT TO 1/2 BARB Deutz D 2.9, Deutz 2.9L Turbo	1
5A	54124GT	HOSE END,BARB,3/8 MNPT X 5/16 Deutz D2011L03I, Deutz TD2011L04i ROW, Perkins 404F-E22T	1
6	101726GT	CAP,FUEL,DIESEL,1/8"VENT(GRN) no longer available, (replaced by 1316635)	1
6B	1316635GT	CAP, FUEL, DIESEL, 0.08 IN HOLE (BLACK)	1
7	27901GT	HOSE END,BARBED,RIGID,-6-6 Deutz D 2.9, Deutz 2.9L Turbo, Perkins 404F-E22T	1
7A	34940GT	HOSE END .375 MPT X .25 HOSE Deutz D2011L03I, Deutz TD2011L04i ROW; to SN S65XCH-45353	1
7B	27901GT	HOSE END,BARBED,RIGID,-6-6 Deutz D2011L03I, Deutz TD2011L04i ROW; from SN S65XCH-45354	1
8	1271773GT	GASKET, TANK, FUEL SENSOR to SN S65XCH-45353	1
9	1271772GT	CAP, TANK, FUEL SENSOR to SN S65XCH-45353	1
10	1251757GT	SCREW,PHPM,10-32X.50,ZAG to SN S65XCH-45353	5

304.1 Tank Side - Gasoline Fuel Tank Installation

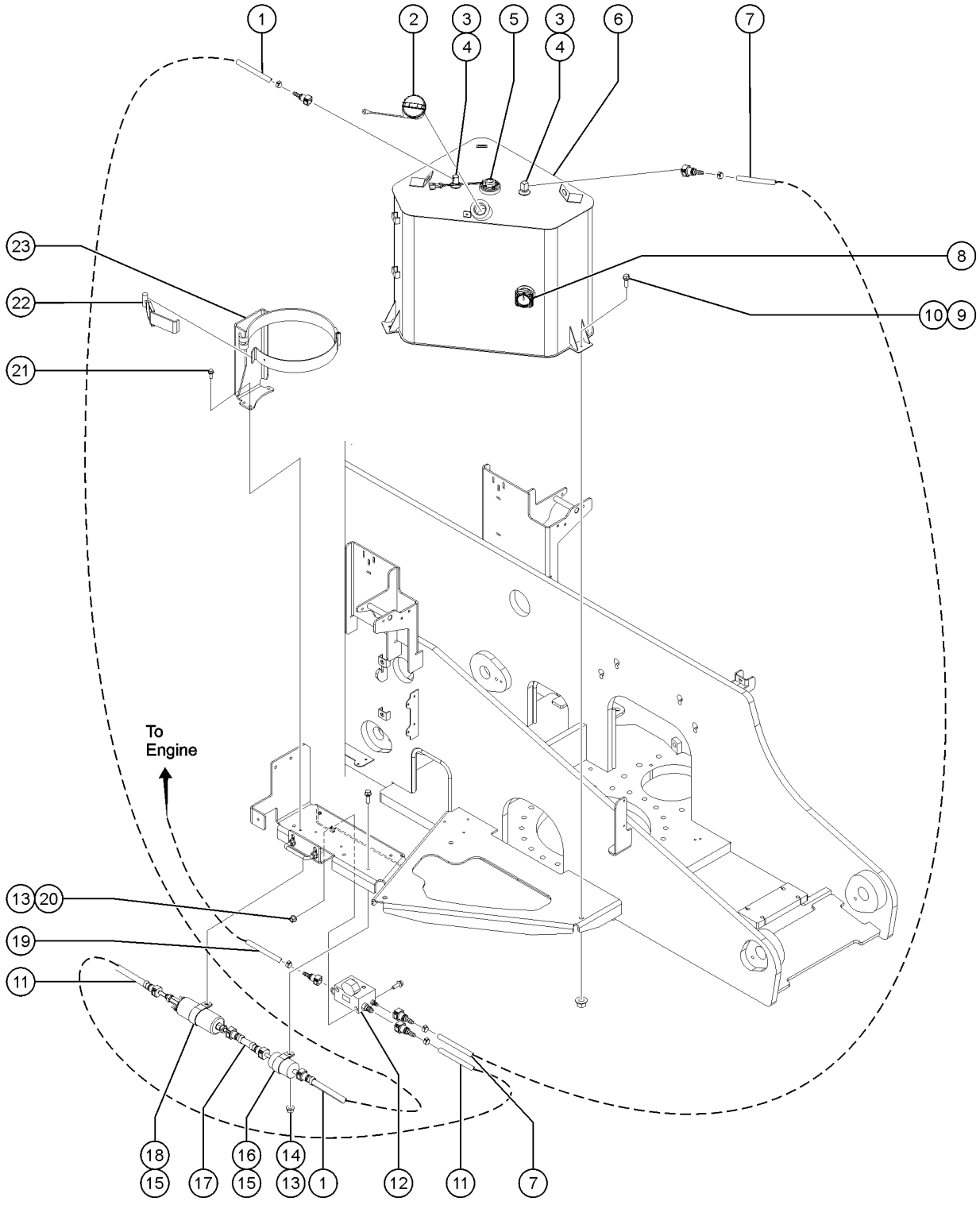

Item	*Part No.*	*Description*	*Qty.*
A	119055GT	HOSE ASSY,LP GAS	1
B	6833GT	CLAMP,0.50,#8 X 1/4,RUB CUSH	3
1	236911GT	HOSE,FUEL,5/16HIGH PRS 40 IN	1
1-	111819GT	FITTING,SAE J2044F X5/16 BARB	2
1-	65887GT	CLAMP,HOSE,1 EAR,1/2	2
1-	71909GT	HOSE,FUEL,5/16 HIGH PRESSURE**	40-inches
2	119918GT	CAP,FUEL,GASOLINE 3.5PSI	1
3	146417GT	ASSY, FUEL PICKUP TUBE	2
4	111818GT	FITTING,1/4 NPT X SAE J2044	2
5	1271771GT	SENSOR, FUEL LEVEL, 24" GAS	1
6	1291202GT	TANK ASSY, GAS, 30 GAL., STEEL (Complete, includes items 2-5 and 8)	1
6-	146376GT	TANK WLDMT, GAS, 30 GAL. STEEL	
6-	824078GT	SCREW,HHF,1/4-20X.75,8,ZAG	
6-	1277924GT	NUT,NYLOCK FLG,1/4-20,F,ZAG	
7	236912GT	HOSE,FUEL,5/16HIGH PRS 60 IN	1
7-	111819GT	FITTING,SAE J2044F X5/16 BARB	2
7-	65887GT	CLAMP,HOSE,1 EAR,1/2	2
7-	71909GT	HOSE,FUEL,5/16 HIGH PRESSURE**	60-inches
8	146413GT	GAUGE, FUEL LEVEL, 20/30 GAL	1
9	824091GT	SCREW, HHF, 3/8-16 X 1.25, 8, ZAG	3
10	824029GT	NUT, TL FLG, 3/8-16, G, ZAG	3
11	229202GT	HOSE,FUEL,5/16 HIGH PRES 35 IN	1
11-	111819GT	FITTING,SAE J2044F X5/16 BARB	2
11-	65887GT	CLAMP,HOSE,1 EAR,1/2	2
11-	71909GT	HOSE,FUEL,5/16 HIGH PRESSURE**	35-inches
12	119170GT	FUEL SENSOR ASSY.	1

304.1 Tank Side - Gasoline Fuel Tank Installation

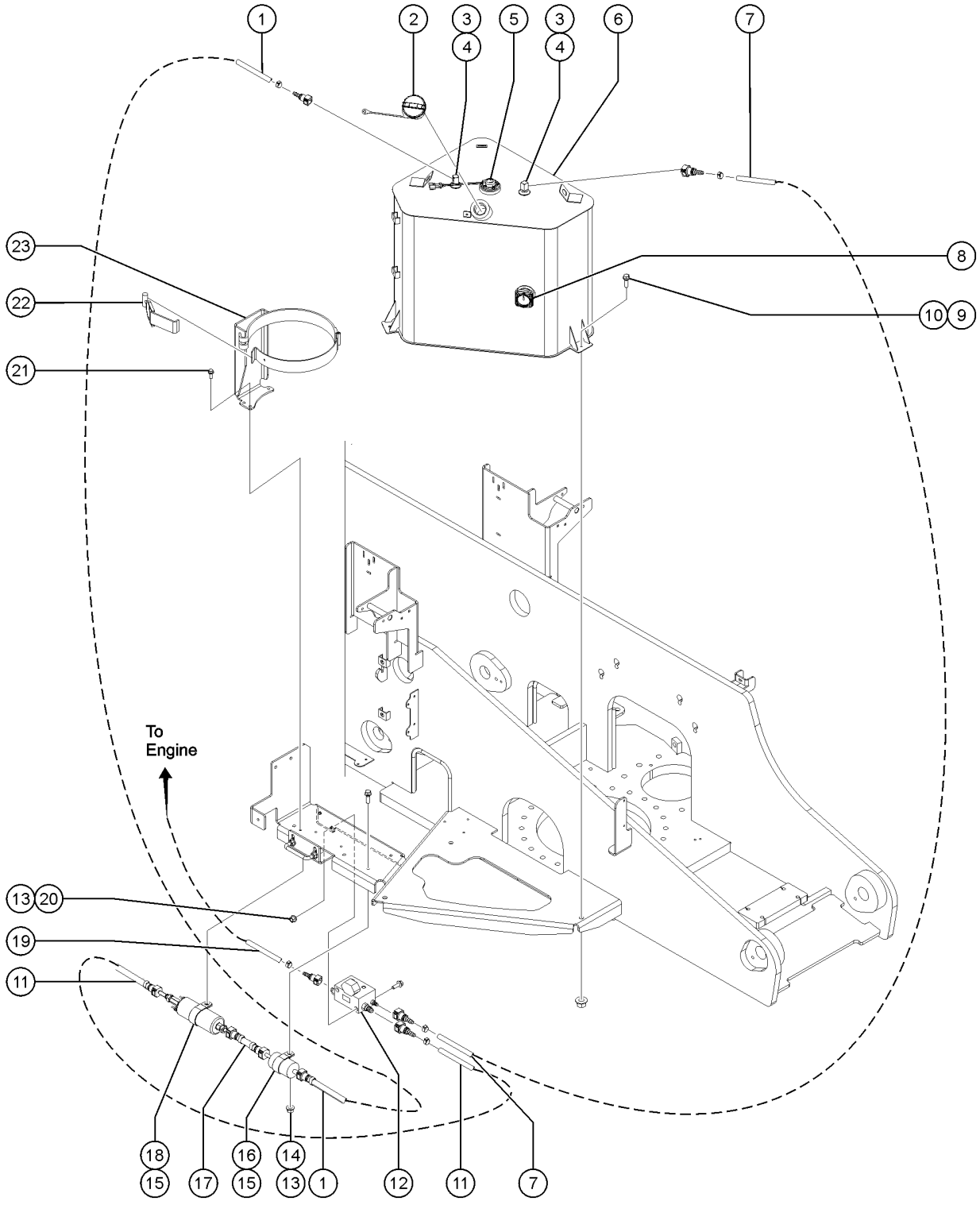

Item	Part No.	Description	Qty.
13	824027GT	NUT, TL FLG, 1/4-20, G, ZAG	
14	824080GT	SCREW, HHF, 1/4-20 X 1.25, 8, ZAG	
15	27497GT	CLAMP,RUBBER CUSHIONED-2 5/32	2
16	1272019GT	FILTER, FUEL	1
17	229203GT	HOSE,FUEL,5/16 HIGH PRES 3 IN	1
17-	111819GT	FITTING,SAE J2044F X5/16 BARB	2
17-	65887GT	CLAMP,HOSE,1 EAR,1/2	2
17-	71909GT	HOSE,FUEL,5/16 HIGH PRESSURE**	3-inches
18	119168GT	FUEL PUMP,DSG-423 AND MSG-425	1
19	229201GT	HOSE,FUEL,5/16HIGH PRES 127 IN	1
19-	111819GT	FITTING,SAE J2044F X5/16 BARB	2
19-	65887GT	CLAMP,HOSE,1 EAR,1/2	2
19-	71909GT	HOSE,FUEL,5/16 HIGH PRESSURE**	127-inches
20	1253485GT	SCREW,HHF,1/4-20X2,8,ZAG	
21	824090GT	SCREW,HHF,3/8-16X1,8,ZAG	2
22	49000GT	L.P.TANK LATCH Sold separately	1
23	1291342GT	WELDMENT, LP TANK MOUNT, S60 XC	1

305.1 Ground Control Box - External

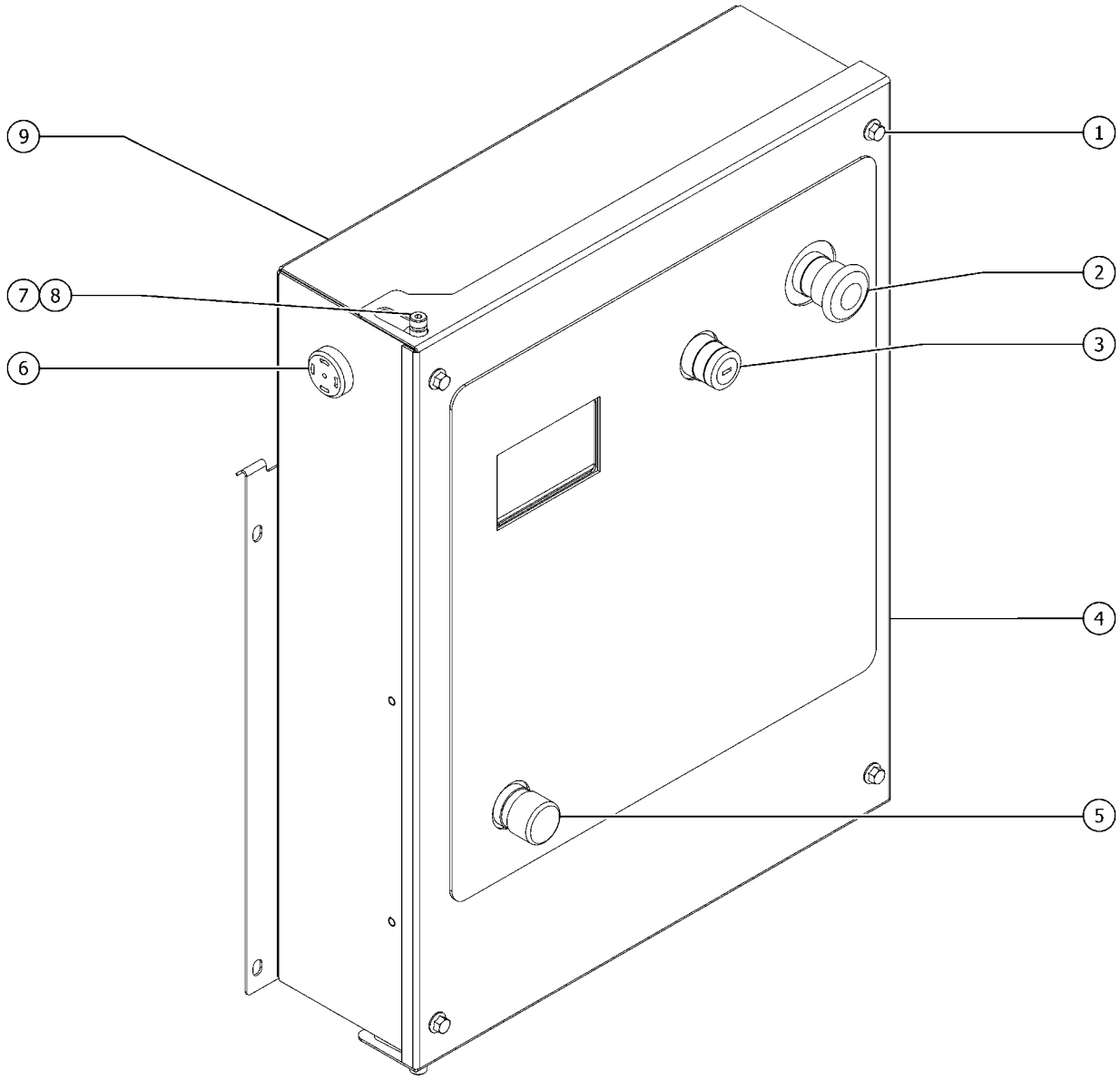

Item	Part No.	Description	Qty.
A	1290459GT	ASSEMBLY, GBOX, S-BOOM, ALC600, TELEMATICS 2.0 (For S-60 XC)	1
B	1290460GT	ASSEMBLY, GBOX, S-BOOM, JIB, ALC600, TELEMATICS 2.0 (For S-65 XC)	1
1	1256855	SCREW,HHF,1/4-20X.625,8,ZAG	4
2	66812GT	BUTTON,PUSH,RED MUSHROOM HEAD	1
2-	66817GT	E-STOP W/ NC CONTACT	
2-	66818GT	CONTACT,NC	
3	66811GT	KEYSWITCH,3POS.MNTND.DR WKEY**	1
3-	66817GT	E-STOP W/ NC CONTACT	
3-	66818GT	CONTACT,NC	
3-	66816GT	CONTACT,N.O.***	
4	1275937GT	WELDMENT LID TCON ALC600	1
5	66813GT	BUTTON,PUSH,BLACK W/SEAL***	1
5-	66821GT	BASE,WITHOUT CONTACTS	
5-	66816GT	CONTACT,N.O.***	
6	39540GT	ALARM, STEADY TONE*** does not include ring nut, 72326	1
6B	72326GT	NUT - PLASTIC, RING FOR ALARMS	
7	1257410GT	BOLT,SHS,5/16X.375X1/4-20,ZAG	2
8	218449GT	WASHER,SHOULDER,NYLON	2
9	1290450GT	WELDMENT, BOX, TCON, ALC600, TELEMATICS 2.0	1
9-	30996GT	PLUG,NYLON .313 BLACK DOMED	

306.1 Ground Control Box - Internal

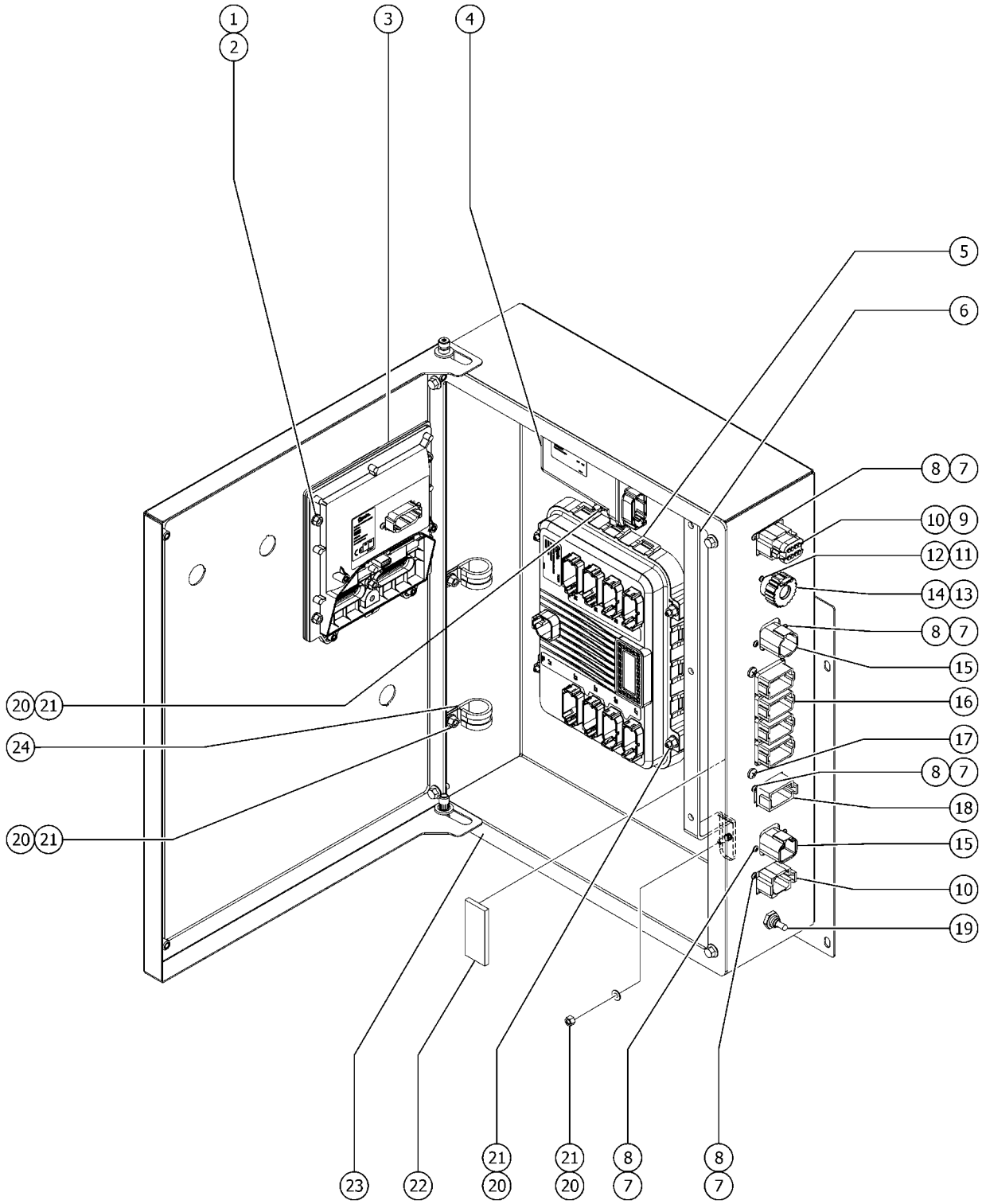

Item	Part No.	Description	Qty.
1	1271081GT	NUT,NYLOCK,8-32,8,ZAG	5
2	1257390GT	WASHER,FLAT,#8,SAE,ZAG	5
3	1286640GT	KIT,DISCON ALC600	1
3-	1268327GT	ECU, DISPLAY CONTROLLER	
3-	1268322GT	GASKET, RIBBON, DISCON	
3-	1268651GT	CABLE, FLAT FLEX, 30 POS 1MMX3"	
4	1280589GT	MODULE, RECOVERY	1
5	1284523GT	ECU,TURNTABLE,S-XC,PROGRAMMED from SN S65XCH-46532	1
5-	1288795GT	ECU, TURNTABLE, S-XC, ALC600	1
5-	1302966GT	SOFTWARE, APPLICATION, S-XC/S-J, ALC600	1
6	119644GT	BRACKET,PBOX WIRE SUPPORT	1
7	824214GT	SCREW,PHPM,6-32X.50,ZAG	10
8	1274164GT	NUT,NYLOCK,6-32,A,ZAG	10
9	119061GT	CONN, PLUG, 12 WAY, DEUTSCH, DT, GRAY	1
10	87755GT	CONN, RECEP, 8 WAY, DEUTSCH, DT, GRAY/FLANGE (UPPER PORT FOR TELEMATICS) (LOWER PORT FOR BOOM CABLE)	1
11	1253477GT	SCREW,PHPM,4-40X.5,ZAG	2
12	1283012GT	NUT,NYLOCK,4-40,2,ZAG	2
13	1272123GT	DUST CAP, RECEPTACLE, 5 WAY, CIRCULAR	1
14	1272122GT	CONN, RECEP, 5 WAY, DEUTSCH, HD10 SERVICE PORT	1
15	73717GT	CONN, RECEP, 4 WAY, DEUTSCH, DTP, FLANGE (UPPER PORT FOR POWER) (LOWER PORT FOR BOOM CABLE)	2
16	73736GT	CONN,RECEP 48 WAY,4 X 12 (ENGINE AND FUNCTION MANIFOLD)	1
17	824226GT	SCREW,PHPSH,#12-11X.75,ZAG	4
18	73730GT	CONN, RECEP, 12 WAY, DEUTSCH, DT, GRAY/FLANGE (SENSORS)	2
19	128203GT	SWITCH TOGGLE ASSY SPDT 2P MOM (RECOVERY SWITCH)	1
20	1274168GT	NUT,NYLOCK,10-32,A,ZAG	10
21	1253185GT	WASHER,FLAT,#10,USS,ZAG	10
22	30997GT	CORROSION INHIBITOR,FOAM	1
23	1277169GT	GASKET GBOX ALC600	1

306.1 Ground Control Box - Internal

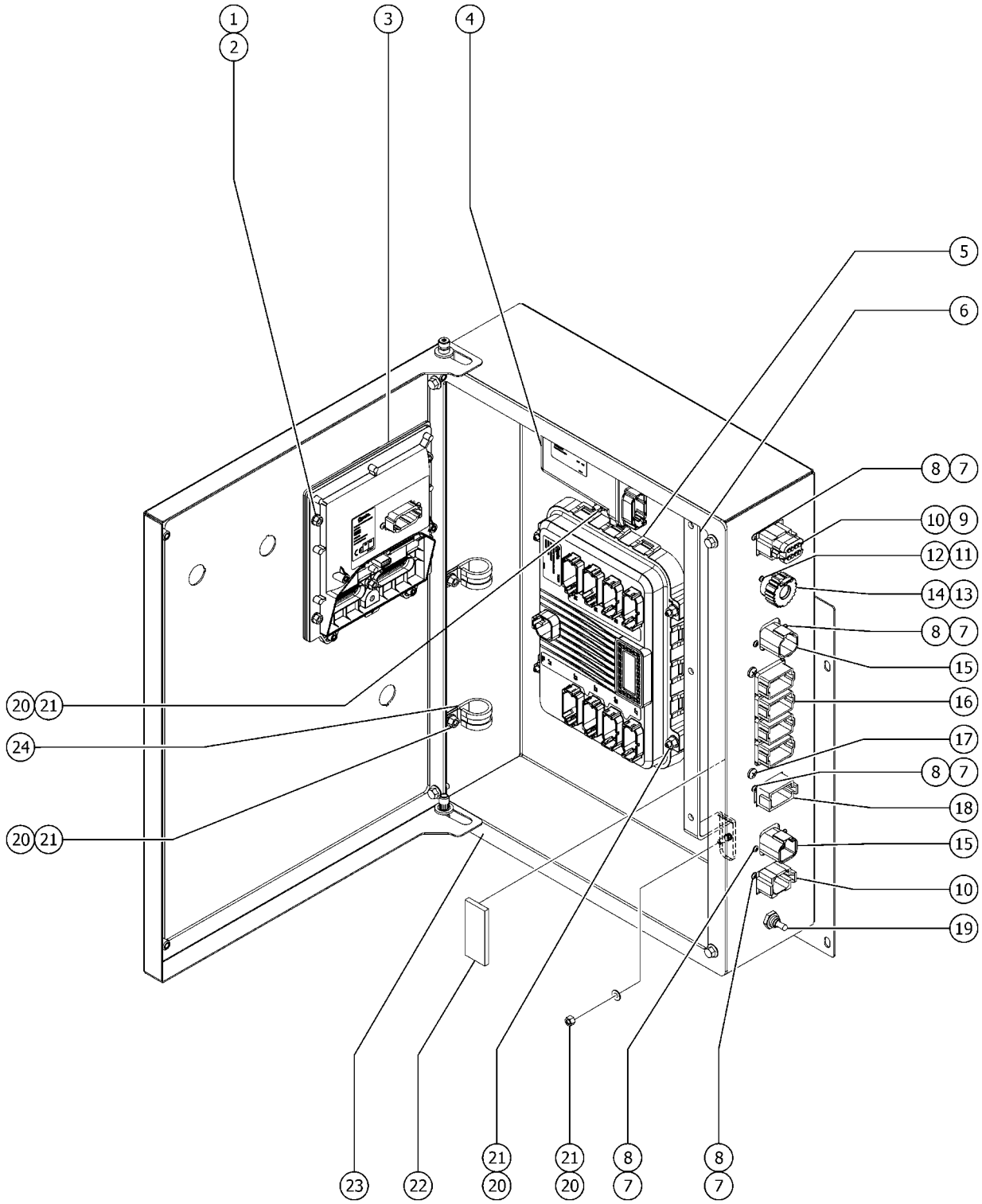

Item	*Part No.*	*Description*	*Qty.*
24	18666GT	CLAMP,1.00,#16 X 1/4,RUB CUSH	2

307.1 Turntable Components and Swivel Drive Assembly

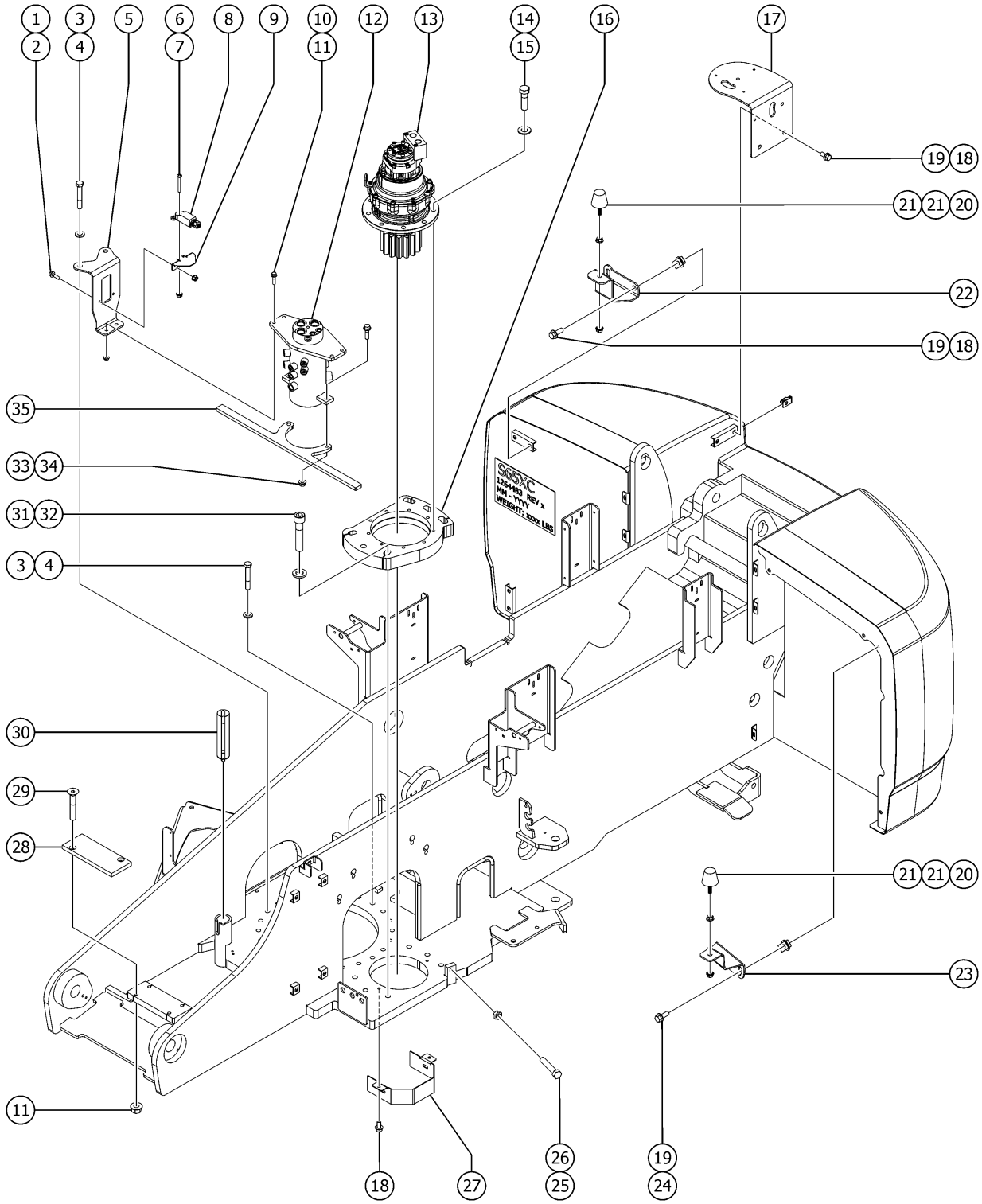

Item	Part No.	Description	Qty.
1	824079GT	SCREW,HHF,1/4-20X1,8,ZAG	2
2	1277924GT	NUT,NYLOCK FLG,1/4-20,F,ZAG	2
3	1256170GT	SCREW,HHC,5/8-11X4,8,ZAG	24
4	1256182GT	WASHER,FLAT,5/8,F436,HRD,ZAG	24
5	1255720GT	FORMING,HYD SWIVEL BRACKET	2
6	824216GT	SCREW, PHPM, 10-32 X 1.5, ZAG	2
7	1264261GT	NUT,SERRATED,10-32,ZAG	2
8	88356-13103GT	SWITCH,LIMIT,W/RLLR ARM,NO/NC	1
8-	119067GT	CONN, RECEP, 4 WAY, DEUTSCH, DT, ENDCAP	
8-	60443GT	LOCK, RECEP 4WAY, 14-18GA	
8-	73713GT	TERMINAL, PIN, DT, 14-18 AWG, NICKEL, 0.095-0.150 OD, DEUTSCH, STRIP	
8-	73725GT	BOOT,DTSCH,DTP4-BT	
8-	19491GT	CONTACTOR,LIMIT SWITCH	
8-	97128GT	ROLLER ARM,LIMIT SWITCH***	
9	1255722GT	FORMING,DRIVE ENABLE LIMIT SW	1
10	824092GT	SCREW, HHF, 3/8-16 X 1.5, 8, ZAG	4
11	1274322GT	NUT,NYLOCK FLG,3/8-16,F,ZAG	6
12	1280390GT	SWIVEL, HYD 8 PORT	1
12-	94937GT	SEAL KIT,8-PORT SWIVEL	
12-	T106954GT	SEAL, O-RING LIP	
12-	T106955GT	SEAL, POLY, CHAMFER	
12-	T106957GT	SEAL, CAP, NOTCHED	
12-	T106961GT	SEAL, O-RING ENERGIZER	
12-	T106962GT	SEAL, CAP, NOTCHED	
13	1264680GT	SWING DRIVE ASSEMBLY CE only (European models)	1
13-	1274106GT	PINION GEAR, SWING DRIVE	
13-	1274107GT	HYDRAULIC MOTOR, SWING DRIVE	
13-	1274108GT	CB VALVE ASSY, SWING DRIVE	

307.1 Turntable Components and Swivel Drive Assembly

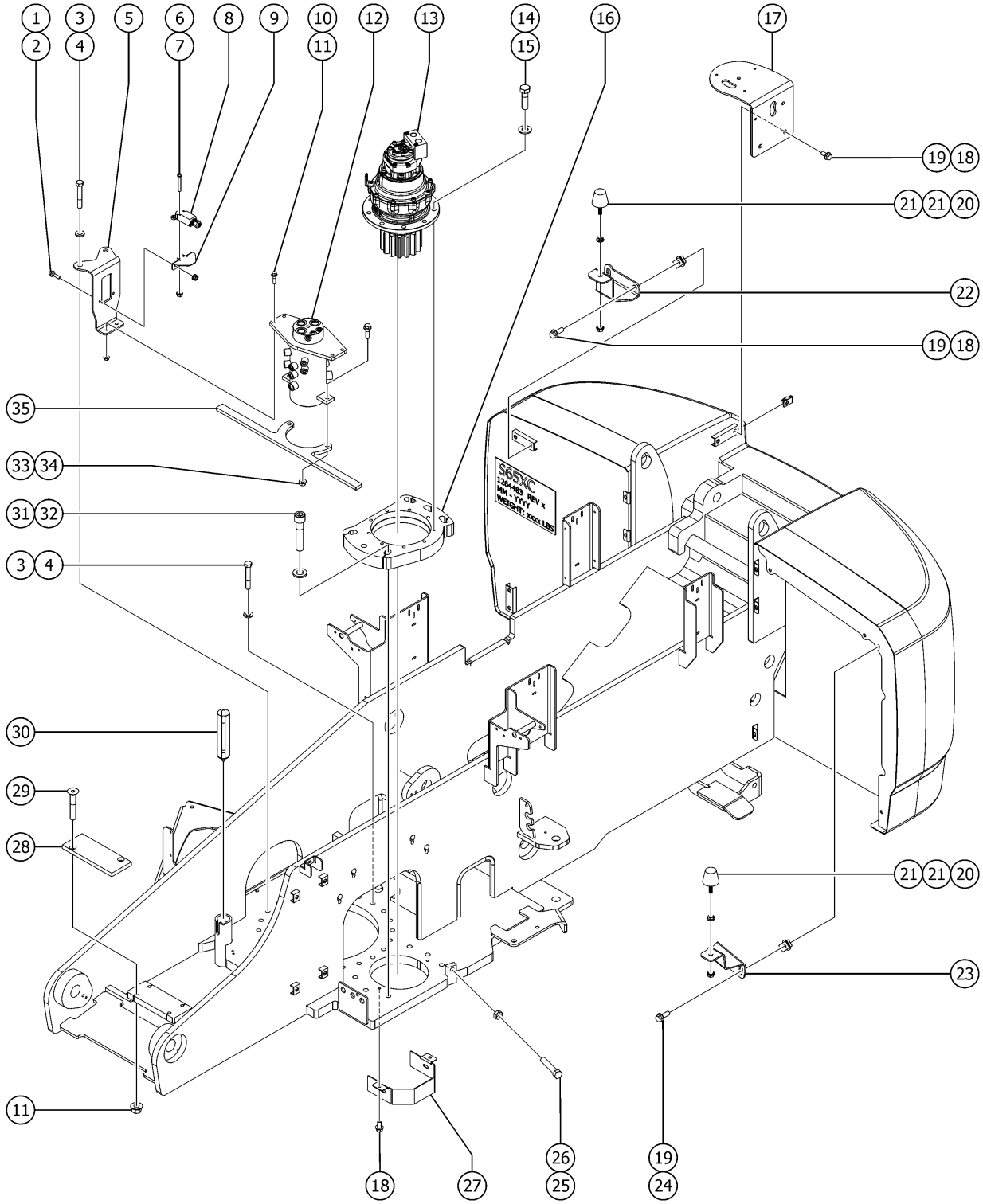

Item	Part No.	Description	Qty.
13-	1274109GT	SEAL KIT, TORQUE HUB, SWING DRIVE	
13-	1274110GT	SEAL KIT, BRAKE, SWING DRIVE	
13-	1274111GT	KIT, FRICTION DIS, SWING DRIVE	
13-	1274112GT	SERVICE KIT, BRAKE SPRING, SWING DRIVE	
13-	1274113GT	O-RING, BRAKE MOTOR, SWING DRIVE	
13-	1274114GT	REBUILD KIT, BRAKE, SWING DRIVE	
13A	1255768GT	SWING DRIVE ASSEMBLY USA and Canadian models	1
13A-	1315824GT	BEARING/SEAL KIT (1255768)	
13A-	1255769GT	SEAL KIT, SWING BRAKE	
13A-	1255770GT	KIT, FRICTION DISC	
13A-	1255771GT	KIT, BRAKE SPRING	
13A-	1255772GT	KIT, SWING BRAKE REBUILD	
13A-	1255773GT	BRAKE TUBING	
13A-	139308GT	SWING MOTOR COMPLETE***	
13A-	139309GT	CBV ASSEMBLY***	
13A-	139323GT	VALVE,COUNTERBAL,CBCA-LIN***	
13A-	58304GT	SHAFT,OUTPUT	
14	1256168GT	SCREW,HHC,1/2-13X1.75,8,ZAG	9
15	825353GT	WASHER,FLAT,1/2,SAE,HRD,ZAG	9
16	77671GT	PLATE,BACKLASH ADJUSTMENT MACH	1
17	1253796GT	FORMING, LIGHT/BEACON BRKT, LH	1
17B	1253795GT	FORMING, LIGHT/BEACON BRKT, RH	1
18	824089GT	SCREW, HHF, 3/8-16 X .75, 8, ZAG	8
19	29868GT	SPRING CLIP,3/8-16,.05-.20X.73,ZAG	10
20	1261277GT	RUBBER BUMPER, 1.25 X 1.25 IN	2
21	1255805GT	NUT,SERRATED,5/16-18,8,ZAG	4
22	1259002GT	FORMING, TS COVER BUMPER	1
23	1259001GT	FORMING, ES COVER BUMPER	1

307.1 Turntable Components and Swivel Drive Assembly

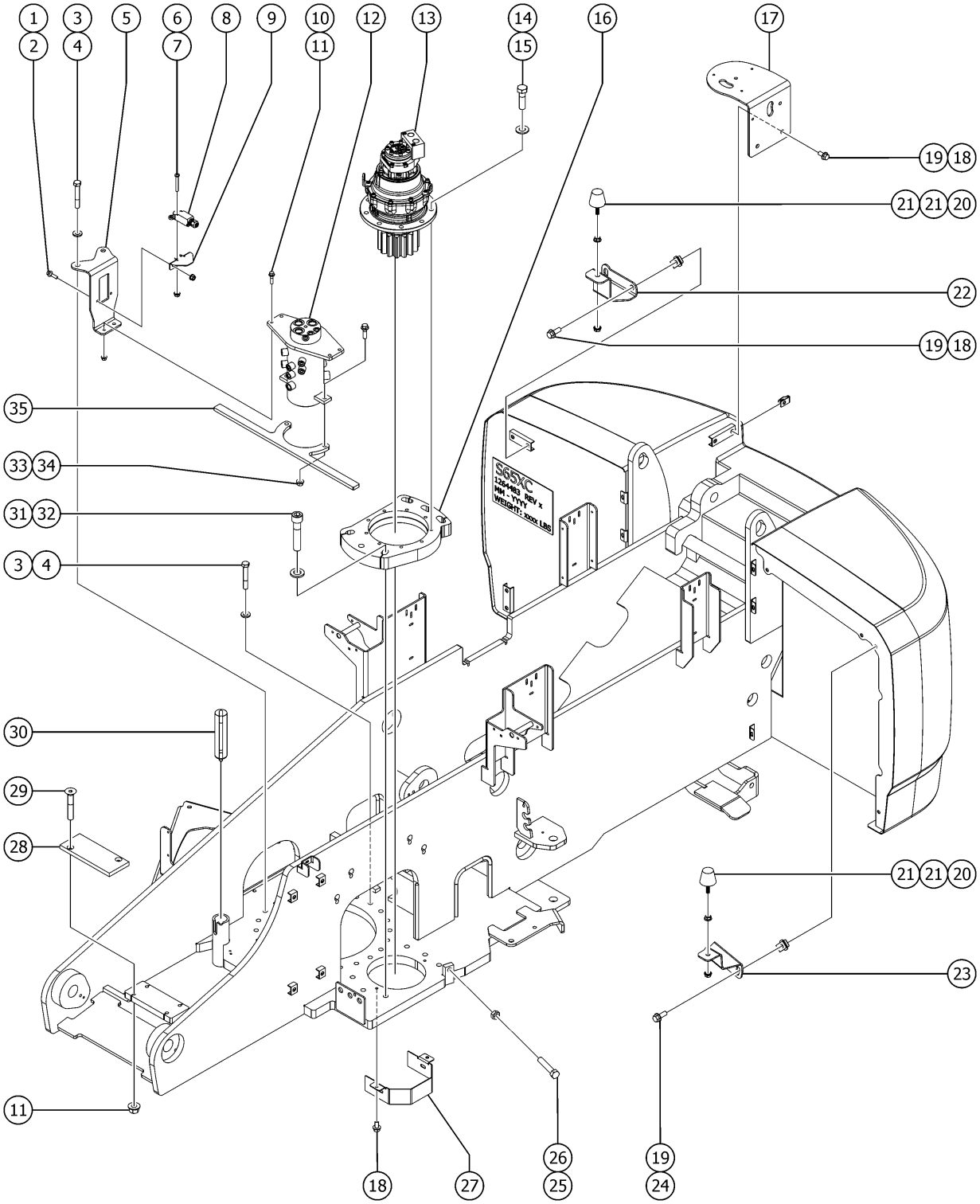

Item	Part No.	Description	Qty.
24	824090GT	SCREW,HHF,3/8-16X1,8,ZAG	4
25	1256846GT	SCREW,HEX TAP,3/4-10X4,8,ZAG	1
26	1256837GT	NUT,JAM,3/4-10,A, ZAG	1
27	77879GT	FORMING,PINION GUARD	1
28	161607GT	WEAPAD, BOOM REST	1
29	1256842GT	SCREW,FHS,3/8-16X2.25,F835,ZAG	2
30	81834GT	WELDMENT,TRANSPORT LOCK	1
31	1257223GT	SCREW,SHC,3/4-10X3.75,A574,ZAG	6
32	1256863GT	WASHER,FLAT,.75,F436,HRD,ZAG	6
33	1274172GT	NUT,NYLOCK FLG,1/2-13,G,ZAG	2
34	826171GT	SCREW,HHF,1/2-13X1.75,ZAG	2
35	1270151GT	HYDRAULIC SWIVEL SUPPORT	1

308.1 Turntable Covers - Hydraulic Tank Side

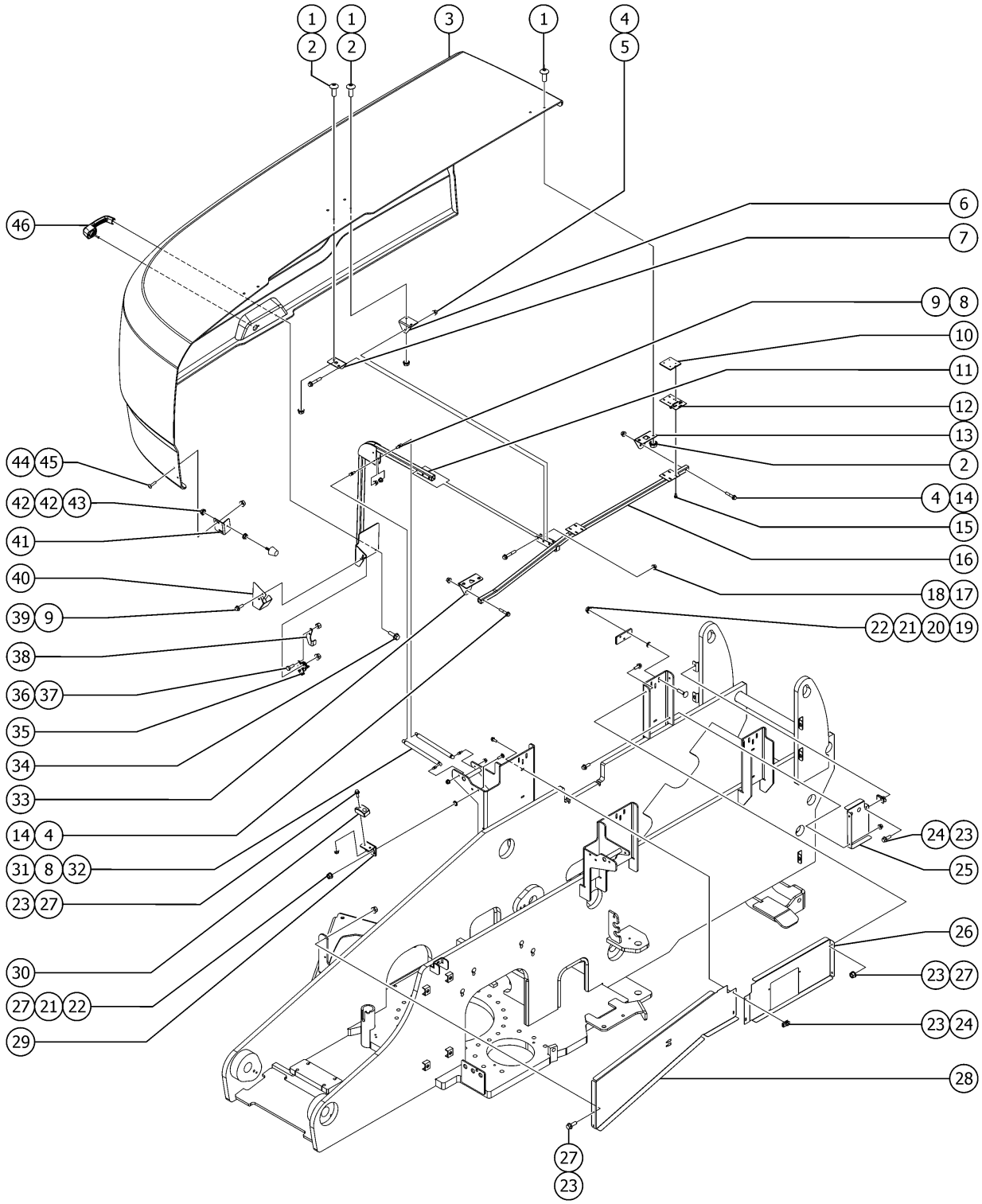

Item	Part No.	Description	Qty.
1	1261836GT	SCREW, THM, TORX, 3/8-16X1,SS	8
2	1257628GT	NUT,SERRATED,3/8-16,ZAG	8
3	1281974GT	ASSY, TS SWING CHASSIS COVER S65XC (includes items 1, 2, 3-, 4-7, 10, 12-16, 31, 33, 34 and 41-46)	
3-	1304649GT	MACHINED, COVER, SWING CHASSIS replaced by 1265999GT, (for S-65XC)	1
3-	1265999GT	COVER, SWING CHASSIS, TANK SIDE	1
4	1274322GT	NUT,NYLOCK FLG,3/8-16,F,ZAG	3
5	1256856GT	SCREW,HHF,3/8-16X2.5,8,ZAG	1
6	1253831GT	MOUNT, COVER SUPPORT CTR 93DEG	1
7	1253830GT	MOUNT, COVER SUPPORT CTR 86DEG	1
8	33555GT	BALL STUD**	4
9	824028GT	NUT,TL FLG,5/16-18,G,ZAG	4
10	1258724GT	SUPPORT, TAPPED HINGE	2
11	1255986GT	WLDMT, TS LOWER COVER SUPPORT	1
12	1278912GT	HINGE,.375X.120THK.,SLOTTED	2
13	1258723GT	MOUNT, COVER SUPPORT FRONT	1
14	1253478GT	SCREW,HHF,3/8-16X2,8,ZAG	2
15	1256855	SCREW,HHF,1/4-20X.625,8,ZAG	8
16	1256767GT	WLDMT, TS UPPER COVER SUPPORT	1
17	824029GT	NUT, TL FLG, 3/8-16, G, ZAG	2
18	1256693GT	SCREW,HHF,3/8-16X2.25,8,ZAG	2
19	1256679GT	NUT,SERRATED,1/4-20,8,ZAG	6
20	77778GT	PLATE,HINGE SUPPORT,BLUE PAINT	2
21	238135GT	PUSHNUT RETAINER, 1/4" X 1/2"OD, ZINC	8
22	1256127GT	BOLT,CARRIAGE,1/4-20X1",GR 5,ZAG	8
23	824078GT	SCREW,HHF,1/4-20X.75,8,ZAG	12
24	56912GT	SPRING CLIP,1/4-20,.025-.15X.54,ZAG	4
25	1253819GT	FORMING, BULKHEAD, TS FRONT	1
26	1273343GT	FORMING, BULKHEAD, S60 TS FRONT	1

308.1 Turntable Covers - Hydraulic Tank Side

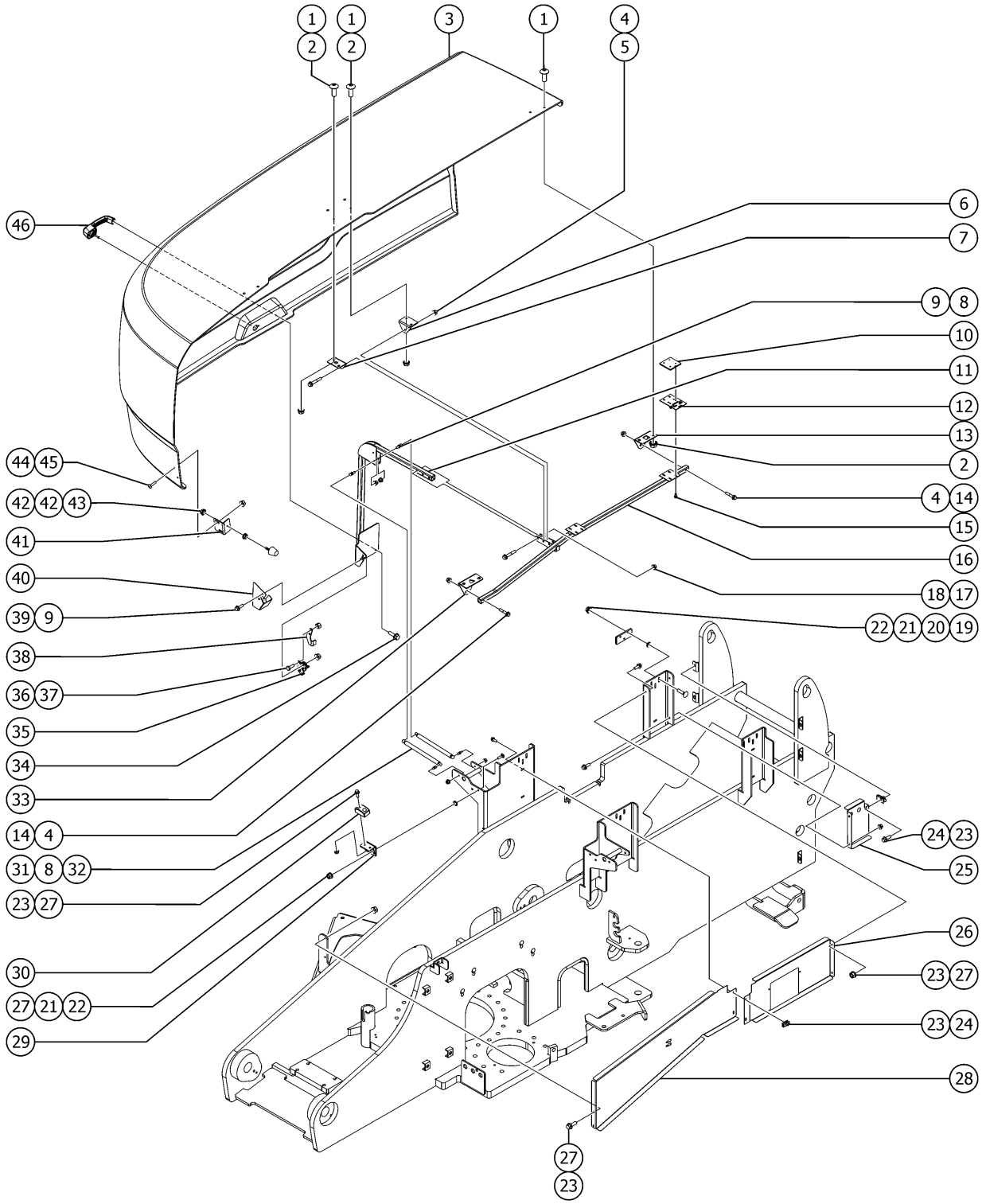

Item	Part No.	Description	Qty.
27	1277924GT	NUT,NYLOCK FLG,1/4-20,F,ZAG	10
28	1273342GT	FORMING, BULKHEAD, S60 TS REAR	1
29	1260162GT	FORMING, TS COVER CONTACT	1
30	1261266GT	BUMPER, COVER SUPPORT	1
31	28301GT	GAS STRUT,250 LBS FORCE***	2
32	1274167GT	NUT,NYLOCK FLG,5/16-18,F,ZAG	2
33	1258722GT	MOUNT, COVER SUPPORT REAR	1
34	231532GT	SCREW,HHF,M6-1.0X20,DIN6921,10.9,ZAB	2
35	215254GT	LATCH,ROTARY,ENGINE COVER	1
36	824059GT	SCREW, HHC, 1/4-20 X .75, 8, ZAG	2
37	824027GT	NUT, TL FLG, 1/4-20, G, ZAG	2
38	1262210GT	FORMING, LATCH TRIGGER, TS	1
39	1255763GT	SCREW,HHF,5/16-18X1.5,8,ZAG	2
40	1261244GT	FORMING,LATCH GUARD,TS	1
41	1254625GT	BRACKET, BUMPER	1
42	1255805GT	NUT,SERRATED,5/16-18,8,ZAG	2
43	1261277GT	RUBBER BUMPER, 1.25 X 1.25 IN	1
44	1261837GT	SCREW, THM, TORX, M6X25, ZAB	2
45	1283013GT	NUT,NYLOCK FLG,M6-1.0,DIN6926,10,ZAB	2
46	1256054GT	HANDLE,YELLOW LOCKING,CODE 455 includes item 34	1
46B	83093GT	KEY SINGLE*** sold separately	
46C	37947GT	KEYS,10 PACK*** sold separately	

309.1_Turntable Covers - Engine Side

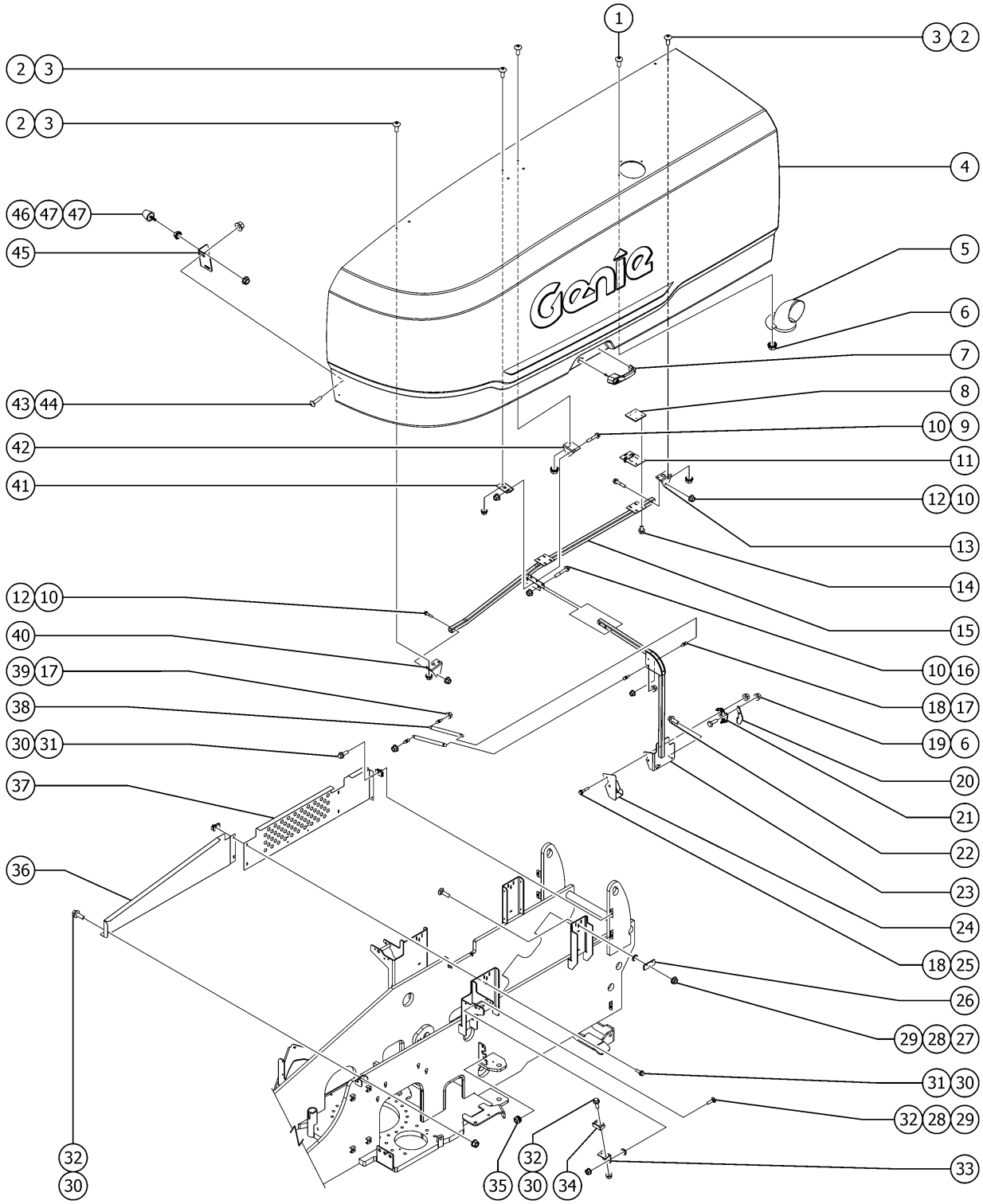

Item	Part No.	Description	Qty.
1	1261835GT	SCREW, THM, TORX, 1/4-20X1,SS	3
2	1261836GT	SCREW, THM, TORX, 3/8-16X1,SS	8
3	1257628GT	NUT,SERRATED,3/8-16,ZAG	8
4	1253271GT	ASSY ES SWING CHASSIS COVER (includes items 1-15, 22, 38, 40-47)	1
4-	1253264GT	COVER, SWING CHASSIS, ES	
5	101964GT	WELDMENT,EXHAUST TUBE	1
6	824027GT	NUT, TL FLG, 1/4-20, G, ZAG	5
7	1256054GT	HANDLE,YELLOW LOCKING,CODE 455 includes 231532	1
7A	231532GT	SCREW,HHF,M6-1.0X20,DIN6921,10.9,ZAB	
7B	83093GT	KEY SINGLE*** sold separately	
7C	37947GT	KEYS,10 PACK*** sold separately	
8	1258724GT	SUPPORT, TAPPED HINGE	2
9	1256856GT	SCREW,HHF,3/8-16X2.5,8,ZAG	1
10	824029GT	NUT, TL FLG, 3/8-16, G, ZAG	5
11	1278912GT	HINGE,.375X.120THK.,SLOTTED	2
12	1253478GT	SCREW,HHF,3/8-16X2,8,ZAG	2
13	1258723GT	MOUNT, COVER SUPPORT FRONT	1
14	1256855GT	SCREW,HHF,1/4-20X.625,8,ZAG	8
15	1256771GT	WLDMT, ES UPPER COVER SUPPORT	1
16	1256693GT	SCREW,HHF,3/8-16X2.25,8,ZAG	2
17	33555GT	BALL STUD**	4
18	824028GT	NUT,TL FLG,5/16-18,G,ZAG	4
19	824059GT	SCREW, HHC, 1/4-20 X .75, 8, ZAG	2
20	1262211GT	FORMING, LATCH TRIGGER, ES	1
21	215254GT	LATCH,ROTARY,ENGINE COVER	1
22	231532GT	SCREW,HHF,M6-1.0X20,DIN6921,10.9,ZAB	2
23	1255987GT	WLDMT, ES LOWER COVER SUPPORT	1
24	1261245GT	FORMING,LATCH GUARD,ES	1

309.1_Turntable Covers - Engine Side

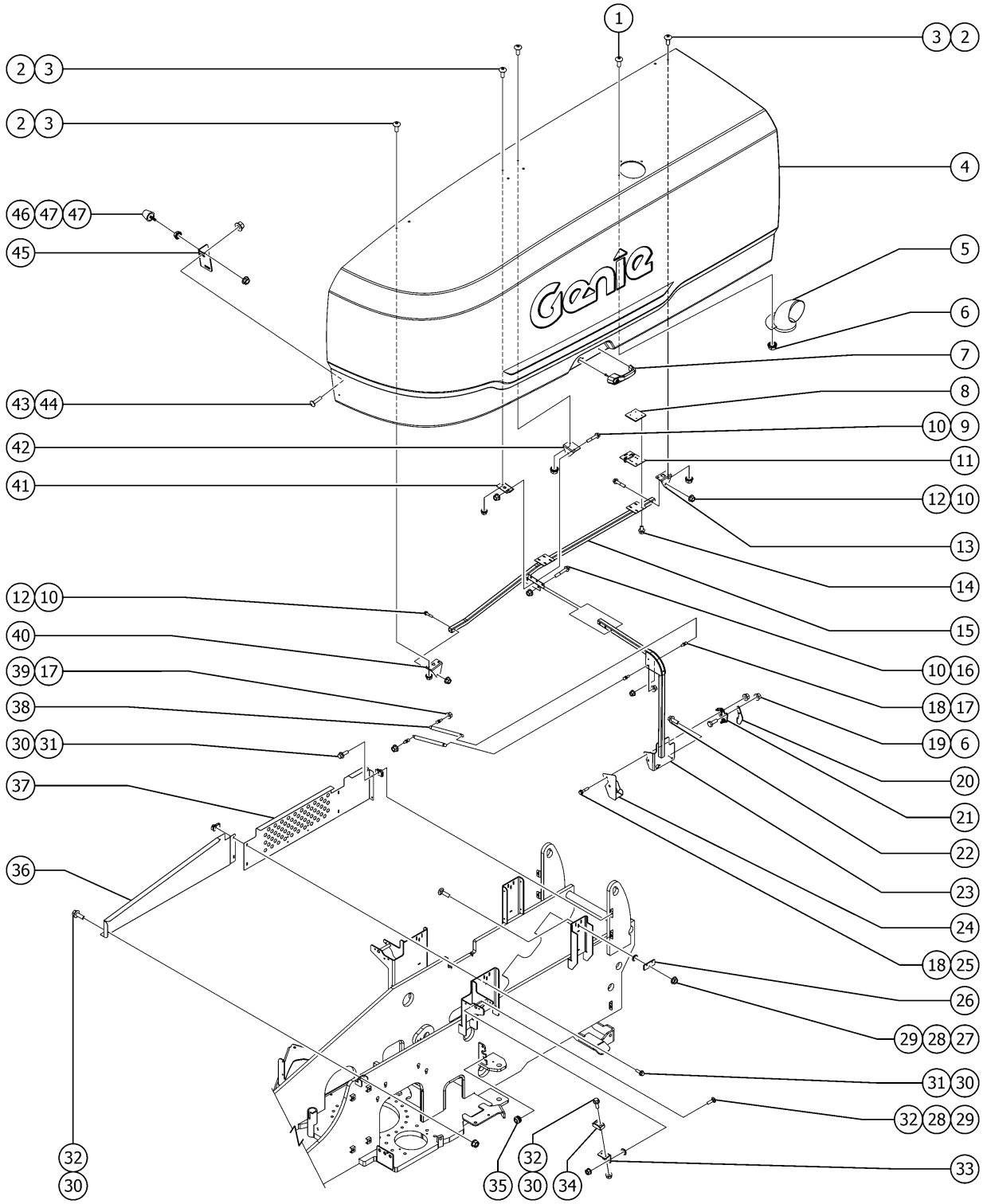

Item	Part No.	Description	Qty.
25	1255763GT	SCREW,HHF,5/16-18X1.5,8,ZAG	2
26	77778GT	PLATE,HINGE SUPPORT,BLUE PAINT	2
27	1256679GT	NUT,SERRATED,1/4-20,8,ZAG	6
28	238135GT	PUSHNUT RETAINER, 1/4" X 1/2"OD, ZINC	8
29	1256127GT	BOLT,CARRIAGE,1/4-20X1",GR 5,ZAG	8
30	824078GT	SCREW,HHF,1/4-20X.75,8,ZAG	9
31	56912GT	SPRING CLIP,1/4-20,.025-.15X.54,ZAG	4
32	1277924GT	NUT,NYLOCK FLG,1/4-20,F,ZAG	7
33	1260163GT	FORMING, ES COVER CONTACT	1
34	1261266GT	BUMPER, COVER SUPPORT	1
35	61189GT	GROMMET,RUBBER .75 X .38 X1.13	2
36	1273345GT	FORMING, BULKHEAD, S60 ES REAR	1
37	1273344GT	FORMING, BULKHEAD, S60 ES FRONT	1
38	28301GT	GAS STRUT,250 LBS FORCE***	2
39	1274167GT	NUT,NYLOCK FLG,5/16-18,F,ZAG	2
40	1258722GT	MOUNT, COVER SUPPORT REAR	1
41	1253830GT	MOUNT, COVER SUPPORT CTR 86DEG	1
42	1253831GT	MOUNT, COVER SUPPORT CTR 93DEG	1
43	1261837GT	SCREW, THM, TORX, M6X25, ZAB	2
44	231513GT	NUT,TL FLG,M6-1.0,DIN6927,10,Z	2
45	1254625GT	BRACKET, BUMPER	1
46	1261277GT	RUBBER BUMPER, 1.25 X 1.25 IN	1
47	1255805GT	NUT,SERRATED,5/16-18,8,ZAG	2

310.1 Wire Harness Diagram

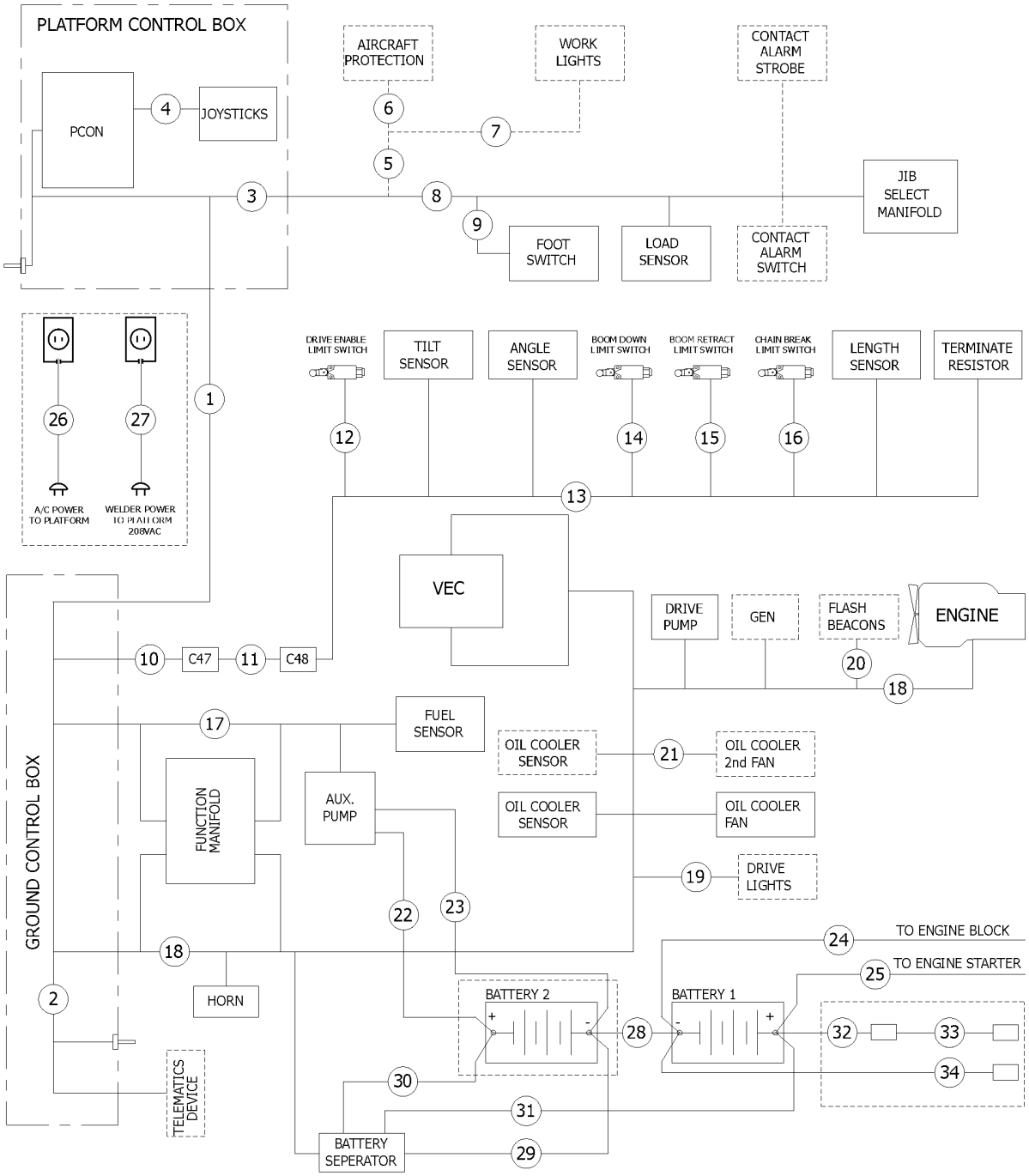

Item	Part No.	Description	Qty.
A	1269735GT	HARNESS, ENCLOSURE WELDER	1
1	1278879GT	CABLE BOOM S65XC (Refer to 310_101) S-65 XC	1
1-	1280487-SGT	CABLE, COMPOSITE, J1939, 11C, 10/14/16/18(INCH)	996 Inches
1A	1280885GT	CABLE BOOM S60XC (Refer to 310_101A)S-60 XC	1
2	1290501GT	HARNESS, GBOX, ALC600, TELEMATICS 2.0 (Refer to 310_102)	1
3	1274448GT	HARNESS PCON ALC600 (Refer to 310_103)	1
3-	1269732GT	HARNESS, SWITCH, PROX, PCON (Refer to 310_103A)	1
4	1269719GT	HARNESS JOYSTICK ALC600 (Refer to 310_104)	1
5	1269734GT	HARNESS, PROX, MANIFOLD, PLAT (Refer to 310_105)	1
6	1269721GT	HARNESS, PROX SENSOR,ACP (Refer to 310_106)	1
7	1269720GT	HARNESS, LIGHTS, WORK (Refer to 310_107)	1
8	1277951GT	HARNESS, JIB SELECT (Refer to 310_108)	1
9	227618GT	ASSEMBLY,FOOTSWITCH (Refer to 310_109)	1
10	1287629GT	HARNESS, BOOM SENSORS, GBOX SD (Refer to 310_110) to SN S65XCH-45870	1
10A	1294541GT	HARNESS BOOM SENSORS GBOX SD (Refer to 310_110A) from SN S65XCH-45871	1
11	1287630GT	HARNESS, BOOM SENSORS,LINK (Refer to 310_111)	1
12	1280871GT	HARNESS, LST10, DRIVE ENABLE LIMIT SWITCH (Refer to 310_112) to SN S65XCH-45870	1
12A	1294573GT	HARNESS, LST10, S60/65XC (Refer to 310_112A) from SN S65XCH-45871	1
13	1287631GT	HARNESS, BOOM SENSORS,BOOM SD (Refer to 310_113)	1
14	1280872GT	HARNESS, LST3S, BOOM DOWN LIMIT SWITCH (Refer to 310_114) to SN S65XCH-45870	1
14A	1294563GT	HARNESS, LST3S, S60/65XC (Refer to 310_114A) from SN S65XCH-45871	1
15	1269714GT	HARNESS, LSB1RS, S80/85 (Refer to 310_115)	1
16	1269717GT	HARNESS, LSB2S, S80/85 (Refer to 310_116)	1
17	1278863GT	HARNESS S60/65XC FUNCTION, MANIFOLD (Refer to 310_117)	1
18	1278859GT	HARNESS S60/65XC DEUTZ 2.9 (Refer to 310_118) (For Deutz 2.9T engine)	1
18A	1280847GT	HARNESS S60/65XC ENGINE DEUTZ TD 2011 (Refer to 310_118A) (For Deutz TD2011 engine) to SN S65XCH-45870	1
18A-	1294547GT	HARNESS S60/65XC ENGINE DEUTZ TD 2011 (Refer to 310_118AA) (For Deutz TD2011 engine) from SN S65XCH-45871	1

310.1 Wire Harness Diagram

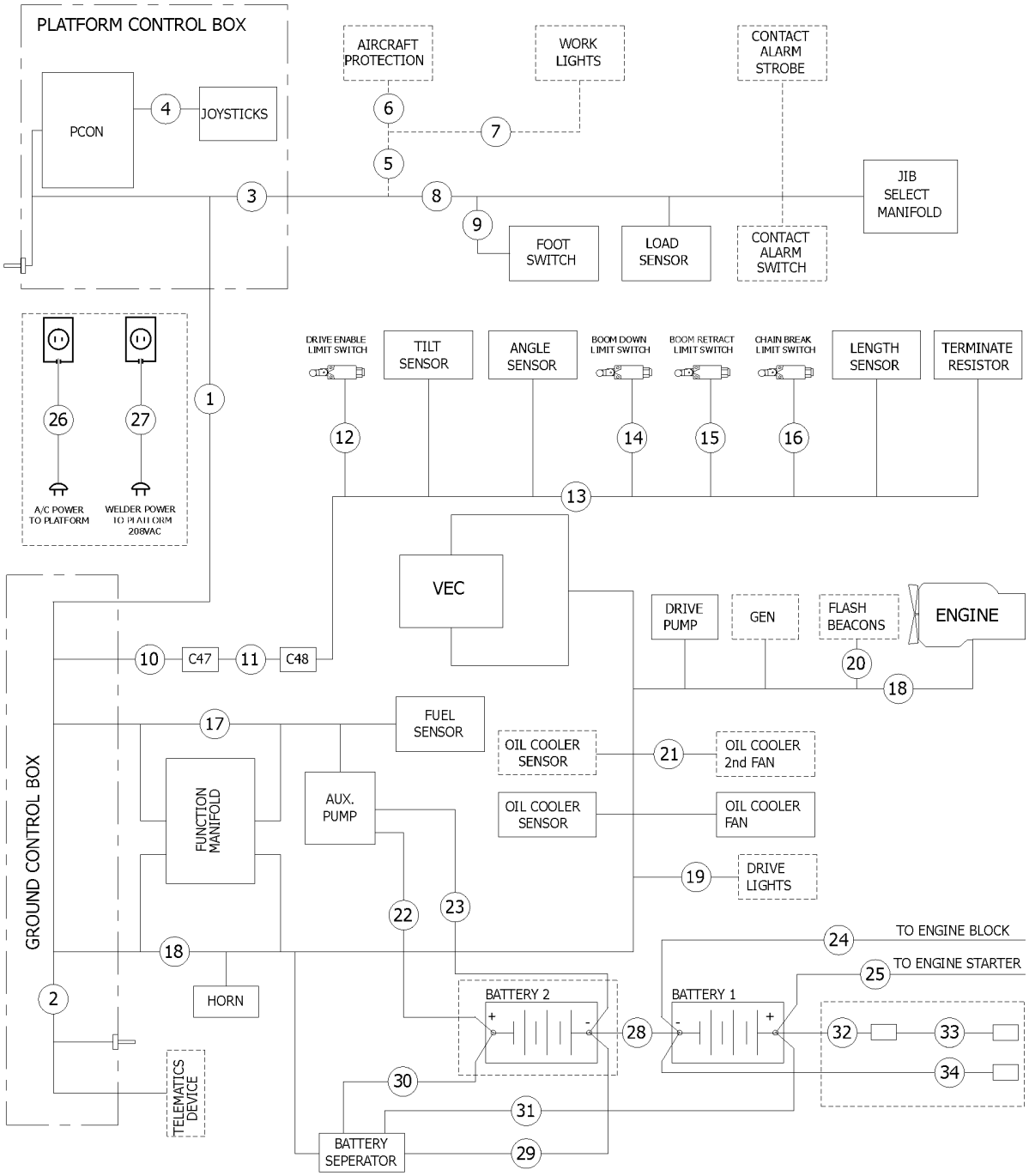

Item	Part No.	Description	Qty.
18B	1279902GT	HARNESS, ENGINE, FORD (Refer to 310_118B) (For Ford MSG425 T4 engine)	1
18C	1283339GT	HARNESS, ENGINE, PERKINS 404D (Refer to 310_118C) (For Perkins 404D-22 engine)	1
18D	1283340GT	HARNESS, ENGINE, PERKINS 404F (Refer to 310_118D) (For Perkins 404F-22 engine)	1
19	1269724GT	HARNESS, LIGHTS, DRIVE (Refer to 310_119)	1
20	1269729GT	HARNESS,BEACONS,FLASHING (Refer to 310_120)	1
21	1283555GT	HARNESS,OIL COOLER,LIFTPOWER (Refer to 310_121)	1
22	121619GT	HARNESS,BATT2 TO APU(+),S80 (Refer to 310_122)	1
23	121622GT	HARNESS,BATT2 TO APU(-),S80 (Refer to 310_123)	1
24	1291410GT	CABLE, BATTERY, NEG, S60/65 (Refer to 310_124)	1
24-	1291411GT	CABLE, JUMPER, GROUND, ENG (Refer to 310_124A)	1
25	88801GT	BATTERY CABLE,POSITIVE,RED (Refer to 310_125)	1
26	139731GT	HARNESS,AC POWER TO PLAT JIB (Refer to 310_126)	1
27A	106115GT	WIRE CABLE 8 GA/4 CON.SO S60XC	936 inches
27B	106115GT	WIRE CABLE 8 GA/4 CON.SO S65XC	1008 inches
28	106555GT	HARNESS,GND BATT 1 TO BATT 2 (Refer to 310_128) from SN S65XCH-45871	1
29	88831GT	HARNESS,16 GA SEPERATOR TO GRD (Refer to 310_129) from SN S65XCH-45871	1
30	106554GT	HARNESS,8GA BATT 2 TO SEPARATR (Refer to 310_130) from SN S65XCH-45871	1
31	88804GT	HARNESS,APU+ TO BATT 2 (Refer to 310_131) from SN S65XCH-45871	1
32	1269060GT	CABLE, RED 2/0, 20" (Refer to 310_132) from SN S65XCH-45871	1
32-	101681GT	BOOT,BATTERY CABLE TERM,LG RED for 1269060	
33	1269051GT	CABLE ASSY, RED 2/0 (Refer to 310_133) from SN S65XCH-45871	1
34	1269061GT	CABLE ASSY, BLACK 2/0 (Refer to 310_134) from SN S65XCH-45871	1

310.101 Cable Boom S65XC

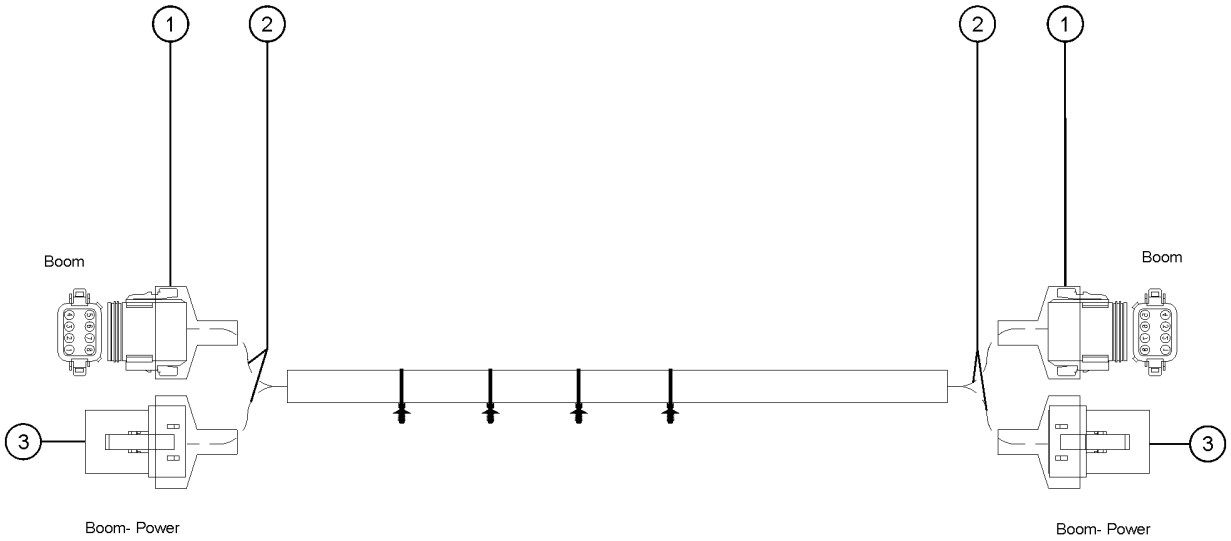

310.101 Cable Boom S65XC

Item	Part No.	Description	Qty.
-	1278879GT	CABLE BOOM S65XC	1
-	1280487-SGT	CABLE, COMPOSITE, J1939, 11C, 10/14/16/18(INCH)	996 Inches
1	119060GT	CONN, PLUG, 8 WAY, DEUTSCH, DT, ENDCAP/ GRAY	2
1-	60433GT	LOCK,PLUG 8 WAY, 14-18GA	2
2	20973GT	WIRE LOOM,3/8 POLY SLIT	24 Inches
3	60527GT	CONN, PLUG, 4 WAY, DEUTSCH, DTP	2
3-	60528GT	LOCK,PLUG 4 WAY,12-14GA***	2

310.101A Cable Boom S60XC

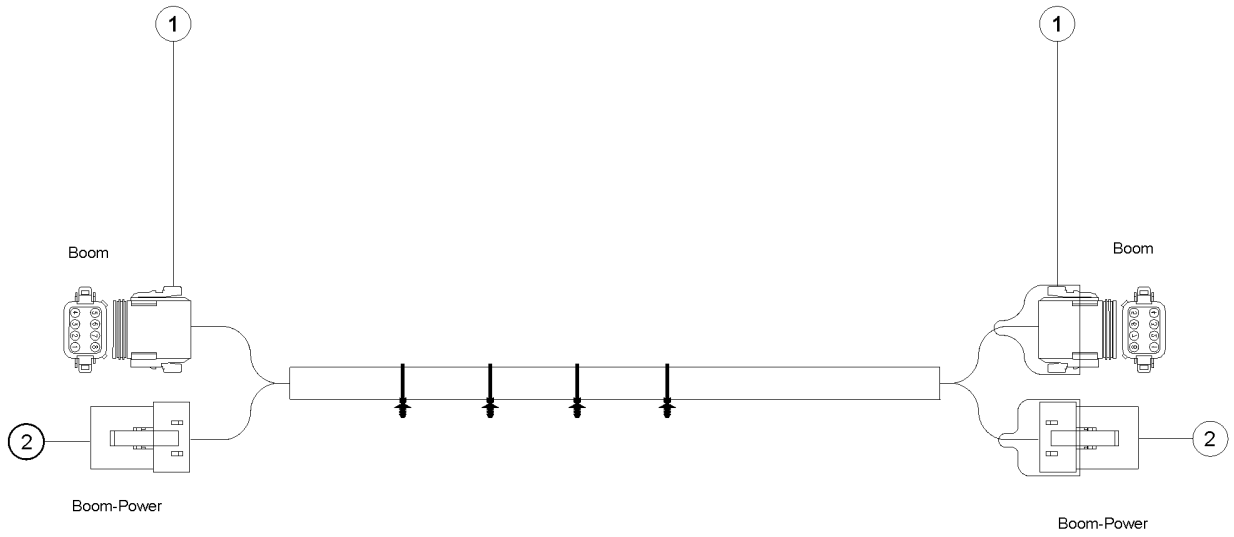

310.101A Cable Boom S60XC

Item	*Part No.*	*Description*	*Qty.*
-	1280885GT	CABLE BOOM S60XC	1
1	119060GT	CONN, PLUG, 8 WAY, DEUTSCH, DT, ENDCAP/ GRAY	2
1-	60433GT	LOCK,PLUG 8 WAY, 14-18GA	2
2	60527GT	CONN, PLUG, 4 WAY, DEUTSCH, DTP	2
2-	60528GT	LOCK,PLUG 4 WAY,12-14GA***	2

310.102 Harness, Gbox, ALC600, Telematics

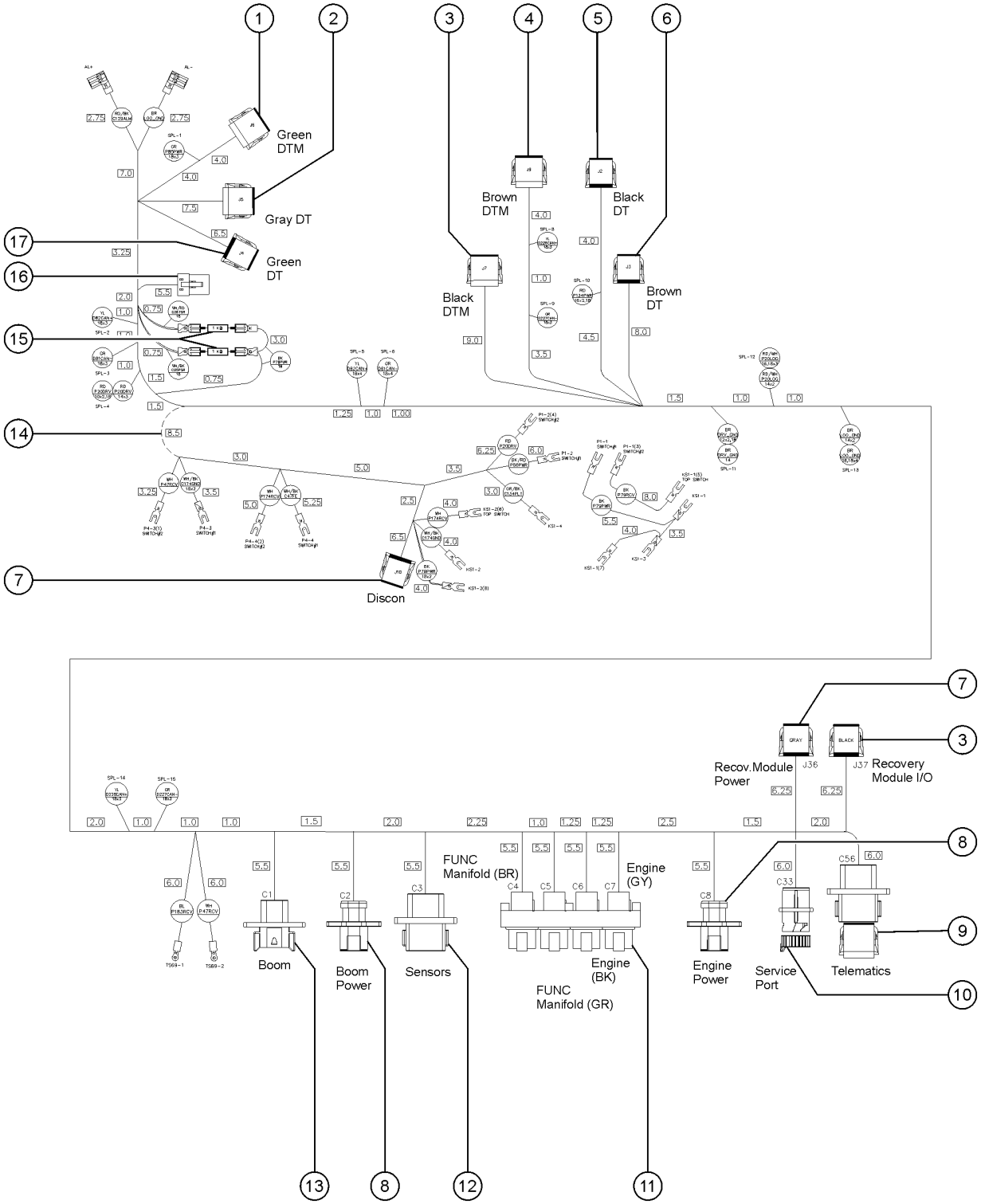

310.102 Harness, Gbox, ALC600, Telematics

Item	Part No.	Description	Qty.
-	1290501GT	HARNESS, GBOX, ALC600, TELEMATICS 2.0	1
1	1258100GT	CONN,PLUG 12D WAY DTM 18-20GA	1
1-	88332GT	LOCK,PLUG 12 WAY DTM 18-20GA	1
2	119061GT	CONN, PLUG, 12 WAY, DEUTSCH, DT, GRAY	1
2-	60435GT	LOCK, PLUG 12WAY, 14-18GA, GRN	1
3	106780GT	CONN, PLUG, 12 WAY, DEUTSCH, DTM, BLACK, KEY-B	2
3-	88332GT	LOCK,PLUG 12 WAY DTM 18-20GA	2
4	822250GT	CONN,PLUG 12C WAY DTM 18-20GA	1
4-	88332GT	LOCK,PLUG 12 WAY DTM 18-20GA	1
5	119062GT	CONN, PLUG, 12 WAY, DEUTSCH, DT, BLACK	1
5-	60435GT	LOCK, PLUG 12WAY, 14-18GA, GRN	1
6	119064GT	CONN PLUG 12 WAY ENDCAP DT BR	1
6-	60435GT	LOCK, PLUG 12WAY, 14-18GA, GRN	1
7	88331GT	CONN, PLUG, 12 WAY, DEUTSCH, DTM, GRAY, KEY-A	2
7-	88332GT	LOCK,PLUG 12 WAY DTM 18-20GA	2
8	73717GT	CONN, RECEP, 4 WAY, DEUTSCH, DTP, FLANGE	1
8-	60526GT	LOCK,RECEP 4 WAY,12-14GA	1
9	73730GT	CONN, RECEP, 12 WAY, DEUTSCH, DT, GRAY/FLANGE	2
10	1272122GT	CONN, RECEP, 5 WAY, DEUTSCH, HD10	1
11	73736GT	CONN,RECEP 48 WAY,4 X 12	1
11-	54255GT	LOCK, RECEP 12WAY, 14-18GA	1
12	73730GT	CONN, RECEP, 12 WAY, DEUTSCH, DT, GRAY/FLANGE	1
12-	54255GT	LOCK, RECEP 12WAY, 14-18GA	1
13	87755GT	CONN, RECEP, 8 WAY, DEUTSCH, DT, GRAY/FLANGE	1
13-	60447GT	LOCK,RECEP 8 WAY,14-18GA	1
14	94652GT	WIRE LOOM,1/2DIA.SLIT HI-TEMP*	8.5 Inches
15	1289592GT	RESISTOR, 1K, 25W to SN S65XCH-45770 (no longer produced for this harness)	2

310.102 Harness, Gbox, ALC600, Telematics

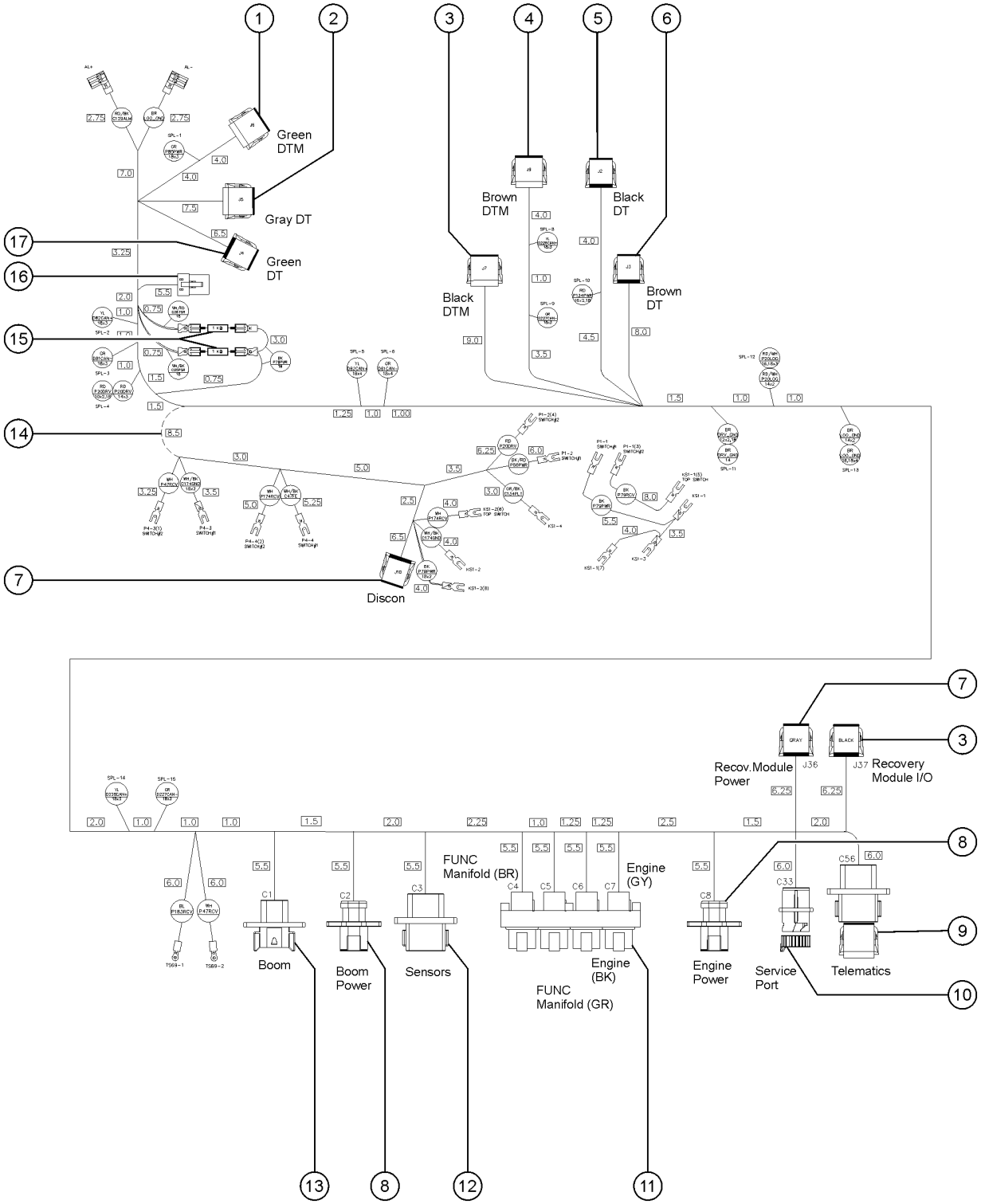

Item	*Part No.*	*Description*	*Qty.*
16	60527GT	CONN, PLUG, 4 WAY, DEUTSCH, DTP	2
16-	60528GT	LOCK,PLUG 4 WAY,12-14GA***	1
17	119063GT	CONN PLUG 12 WAY ENDCAP DT GR	1
17-	60435GT	LOCK, PLUG 12WAY, 14-18GA, GRN	1

310.103 Harness PCON ALC600

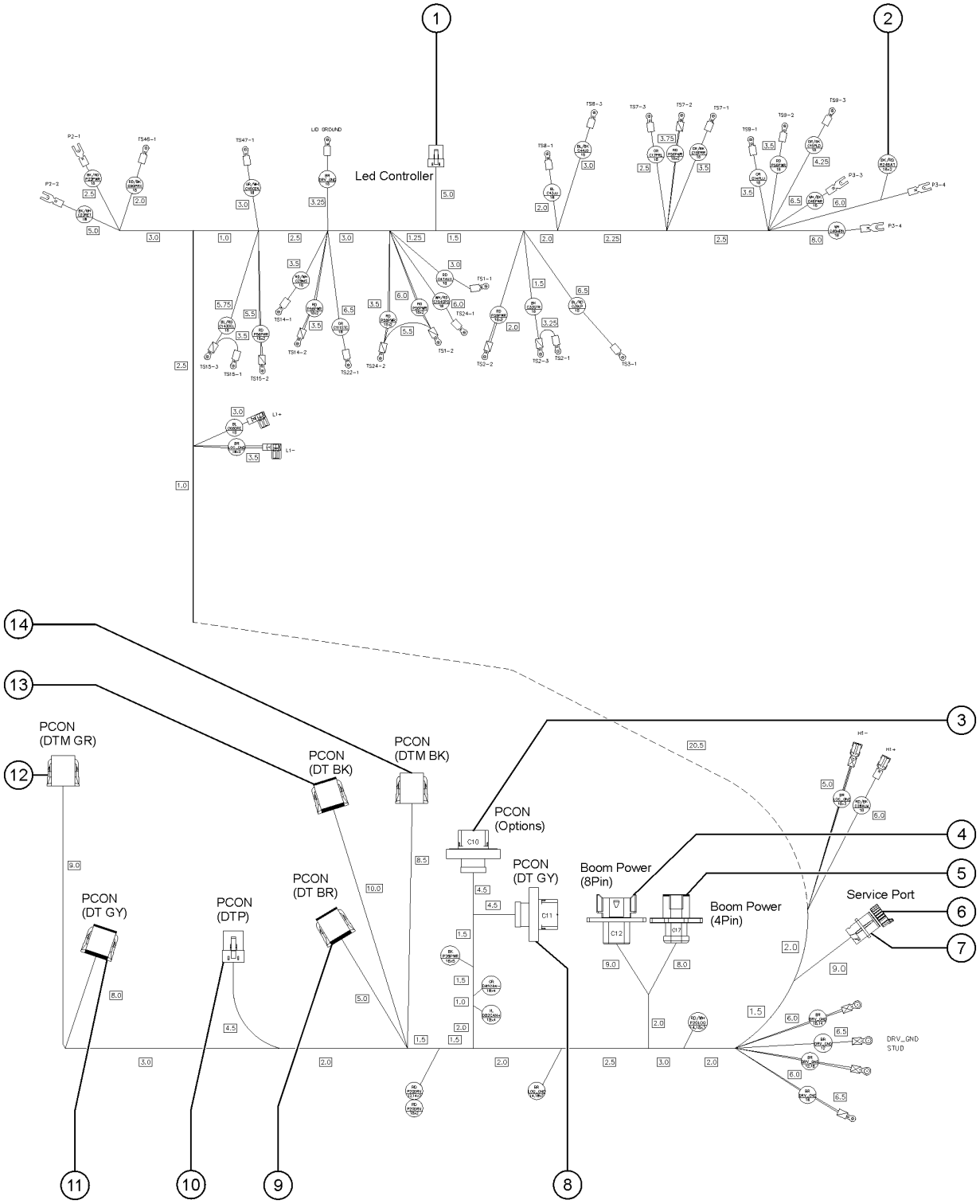

Item	Part No.	Description	Qty.
-	1274448GT	HARNESS PCON ALC600	1
1	110654GT	CONN, PLUG, 8 WAY, MOLEX	1
2	56445GT	DIODE,6 AMP 200 PIV,REEL	
3	226948GT	CONN, RECEP, 18 WAY, DEUTSCH, DTV, BLACK/FLANGE	1
3-	226388GT	LOCK,SECONDARY,DEUT,WV-18P	1
4	87755GT	CONN, RECEP, 8 WAY, DEUTSCH, DT, GRAY/FLANGE	1
4-	60447GT	LOCK,RECEP 8 WAY,14-18GA	1
5	73717GT	CONN, RECEP, 4 WAY, DEUTSCH, DTP, FLANGE	1
5-	60526GT	LOCK,RECEP 4 WAY,12-14GA	1
6	1272123GT	DUST CAP, RECEPTACLE, 5 WAY, CIRCULAR	1
7	1272122GT	CONN, RECEP, 5 WAY, DEUTSCH, HD10	1
8	1265862GT	CONN, RECEP, 18 WAY, DEUTSCH, DTV, GRAY/FLANGE	1
8-	226388GT	LOCK,SECONDARY,DEUT,WV-18P	1
9	119064GT	CONN PLUG 12 WAY ENDCAP DT BR	1
9-	60435GT	LOCK, PLUG 12WAY, 14-18GA, GRN	1
10	60527GT	CONN, PLUG, 4 WAY, DEUTSCH, DTP	1
10-	60528GT	LOCK,PLUG 4 WAY,12-14GA***	1
11	119061GT	CONN, PLUG, 12 WAY, DEUTSCH, DT, GRAY	1
11-	60435GT	LOCK, PLUG 12WAY, 14-18GA, GRN	1
12	822250GT	CONN,PLUG 12C WAY DTM 18-20GA	1
12-	88332GT	LOCK,PLUG 12 WAY DTM 18-20GA	1
13	119062GT	CONN, PLUG, 12 WAY, DEUTSCH, DT, BLACK	1
13-	60435GT	LOCK, PLUG 12WAY, 14-18GA, GRN	1
14	106780GT	CONN, PLUG, 12 WAY, DEUTSCH, DTM, BLACK, KEY-B	1
14-	88332GT	LOCK,PLUG 12 WAY DTM 18-20GA	1

310.103A Harness, Switch, PROX, PCON

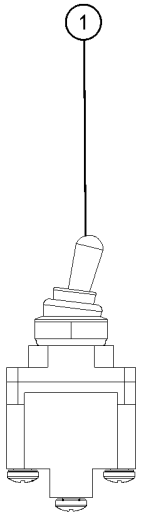

310.103A Harness, Switch, PROX, PCON

Item	*Part No.*	*Description*	*Qty.*
-	1269732GT	HARNESS, SWITCH, PROX, PCON	1
1	128203GT	SWITCH TOGGLE ASSY SPDT 2P MOM	1

310.104 Harness Joystick ALC600

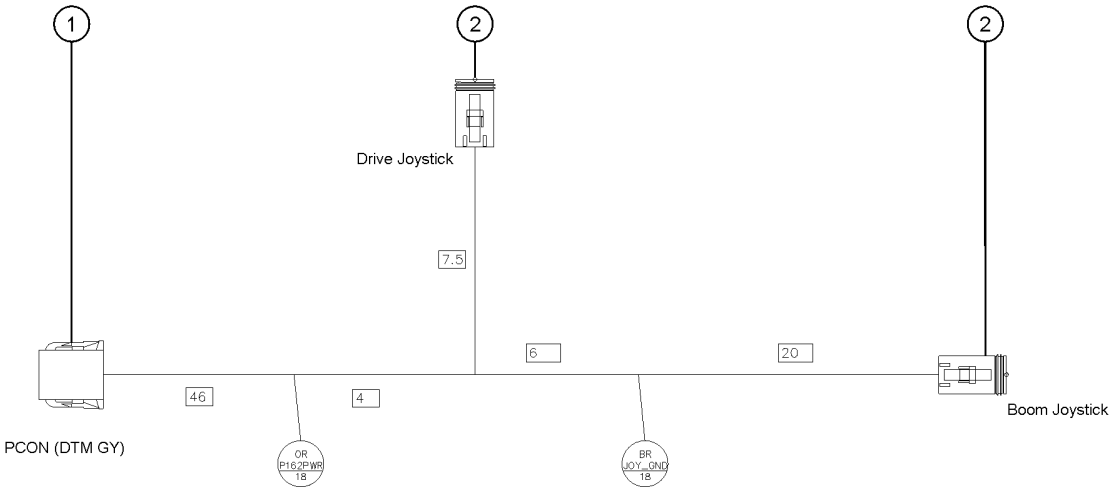

Item	*Part No.*	*Description*	*Qty.*
-	1269719GT	HARNESS JOYSTICK ALC600	1
1	88331GT	CONN, PLUG, 12 WAY, DEUTSCH, DTM, GRAY, KEY-A	1
1-	88332GT	LOCK,PLUG 12 WAY DTM 18-20GA	1
2	99343GT	CONNECTOR,PLUG 6 WAY 18-20 GA	2
2-	99344GT	LOCK,PLUG 6 WAY 18-20GA	2

310.105 Harness, PROX, Manifold, Plat

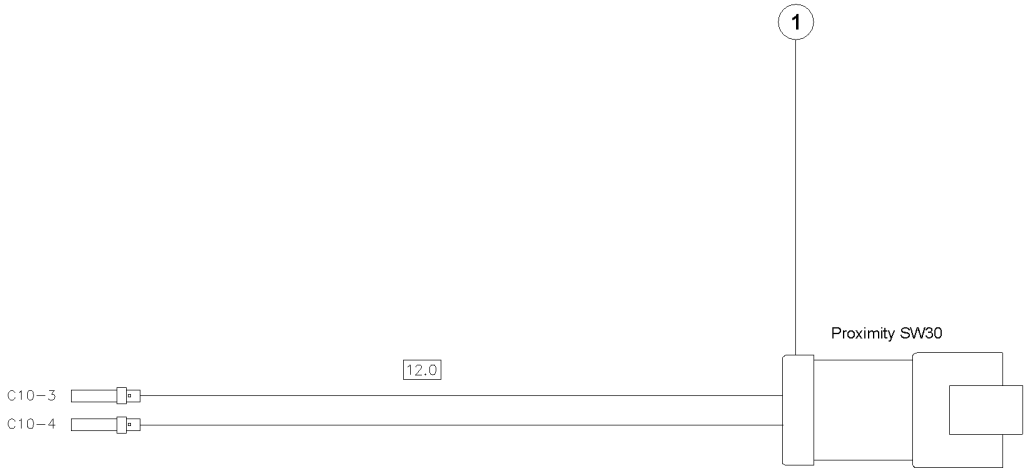

Item	*Part No.*	*Description*	*Qty.*
-	1269734GT	HARNESS, PROX, MANIFOLD, PLAT	1
1	119065GT	CONN, RECEP, 2 WAY, DEUTSCH, DT	1
1-	60439GT	CONN, RECEP, 2 WAY, DEUTSCH, DT, LOCK	1

310.106 Harness, PROX Sensor, ACP

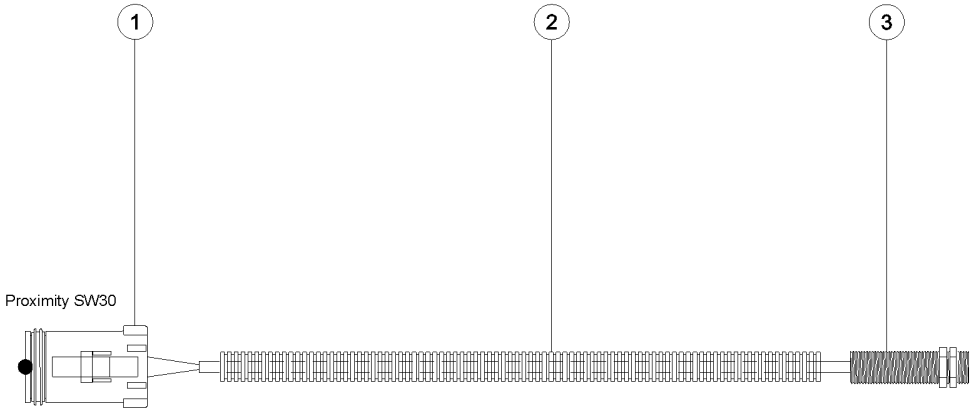

310.106 Harness, PROX Sensor, ACP

Item	*Part No.*	*Description*	*Qty.*
-	1269721GT	HARNESS, PROX SENSOR,ACP	1
1	119056GT	CONN, PLUG, 2 WAY, DEUTSCH, DT, ENDCAP	1
1-	60425GT	CONN, PLUG, 2 WAY, DEUTSCH, DT, LOCK	1
2	99087GT	WIRE LOOM,1/4 DIA. SLIT	44 Inches
3	27391GT	PROXIMITY SENSOR***	1

310.107 Harness, Plights, Work

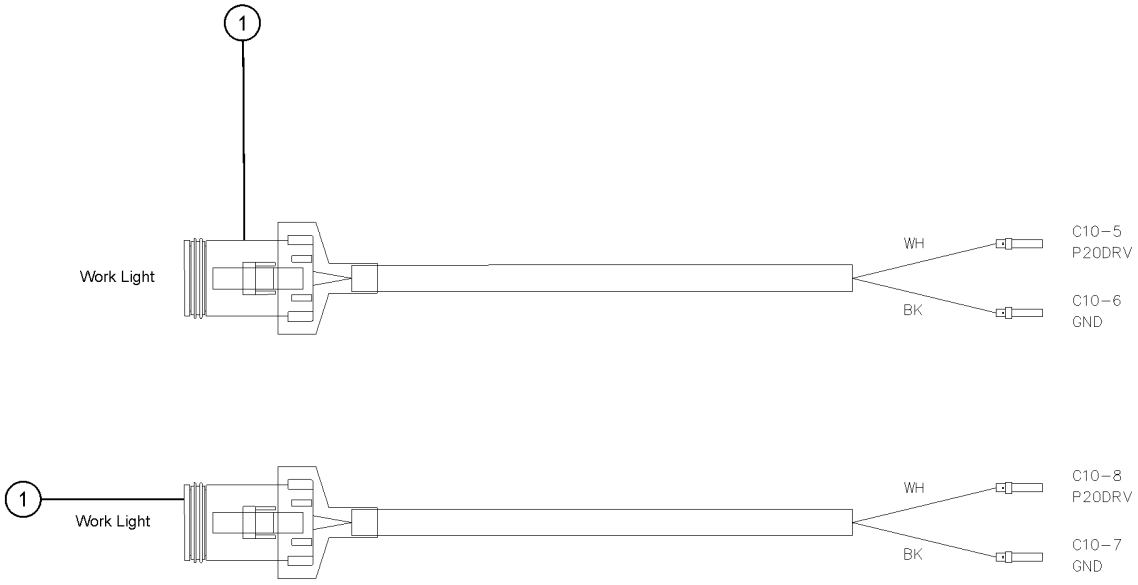

Item	*Part No.*	*Description*	*Qty.*
-	1269720GT	HARNESS, LIGHTS, WORK	1
1	119056GT	CONN, PLUG, 2 WAY, DEUTSCH, DT, ENDCAP	2
1-	60425GT	CONN, PLUG, 2 WAY, DEUTSCH, DT, LOCK	2

310.108 Harness, Jib Select

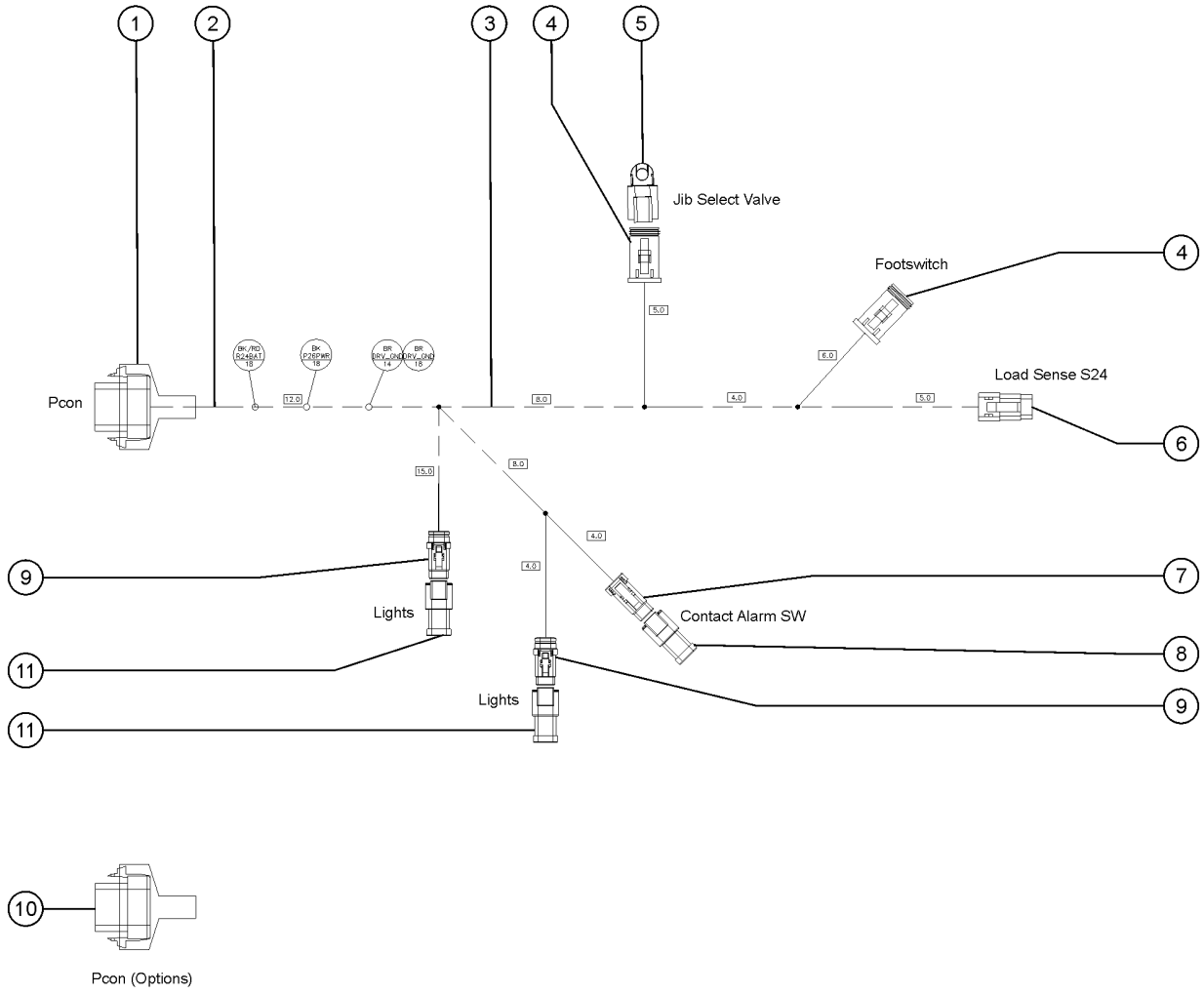

310.108 Harness, Jib Select

Item	Part No.	Description	Qty.
-	1277951GT	HARNESS, JIB SELECT	1
1	226389GT	CONN, PLUG, 18 WAY, DEUTSCH, DTV, GRAY	1
1-	226390GT	LOCK,PLUG, 18WAY, DSCH, WV-18S	1
2	75640GT	WIRE LOOM,3/4 DIA.	12 Inches
3	20973GT	WIRE LOOM,3/8 POLY SLIT	50 Inches
4	119056GT	CONN, PLUG, 2 WAY, DEUTSCH, DT, ENDCAP	2
4-	60425GT	CONN, PLUG, 2 WAY, DEUTSCH, DT, LOCK	2
5	229110GT	CONN, RECEP, 2 WAY, DEUTSCH, DT, CAP	1
6	99343GT	CONNECTOR,PLUG 6 WAY 18-20 GA	1
6-	99344GT	LOCK,PLUG 6 WAY 18-20GA	1
7	1277904GT	CONN, PLUG, 4 WAY, DEUTSCH, DTM	1
7-	1277905GT	CONN, PLUG, 4 WAY, DEUTSCH, DTM, LOCK	1
8	1277906GT	CONN, RECEP, 4 WAY, DTM	1
9	T110954GT	CONN,PLUG 3 WAY DTM, 16-24GA	2
9-	T110955GT	LOCK,PLUG 3 WAY DTM, 16-24GA	2
10	226947GT	CONN, PLUG, 18 WAY, DEUTSCH, DTV, BLACK	1
10-	226390GT	LOCK,PLUG, 18WAY, DSCH, WV-18S	1
11	T112536GT	CONN, RECEP 3 WAY DTM, 16-24 GA	2

310.109 Assembly, Foot Switch

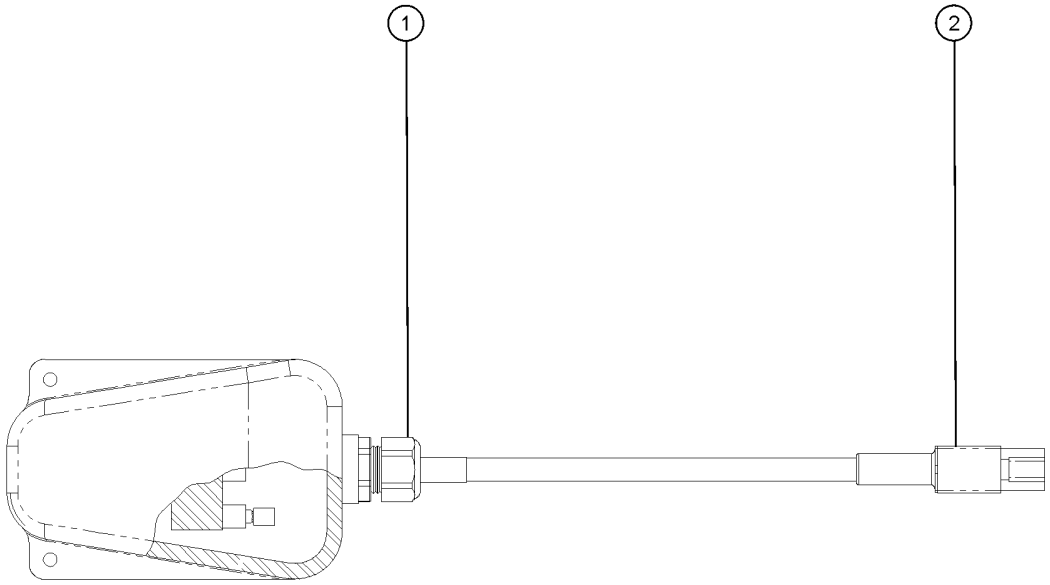

310.109 Assembly, Foot Switch

Item	*Part No.*	*Description*	*Qty.*
-	227618GT	ASSEMBLY,FOOTSWITCH	1
1	33576GT	CONN,SQZ,1/2NPT,.170-.450	1
2	119065GT	CONN, RECEP, 2 WAY, DEUTSCH, DT	1
2-	60439GT	CONN, RECEP, 2 WAY, DEUTSCH, DT, LOCK	1

310.110 Harness, Boom Sensor, GBOX

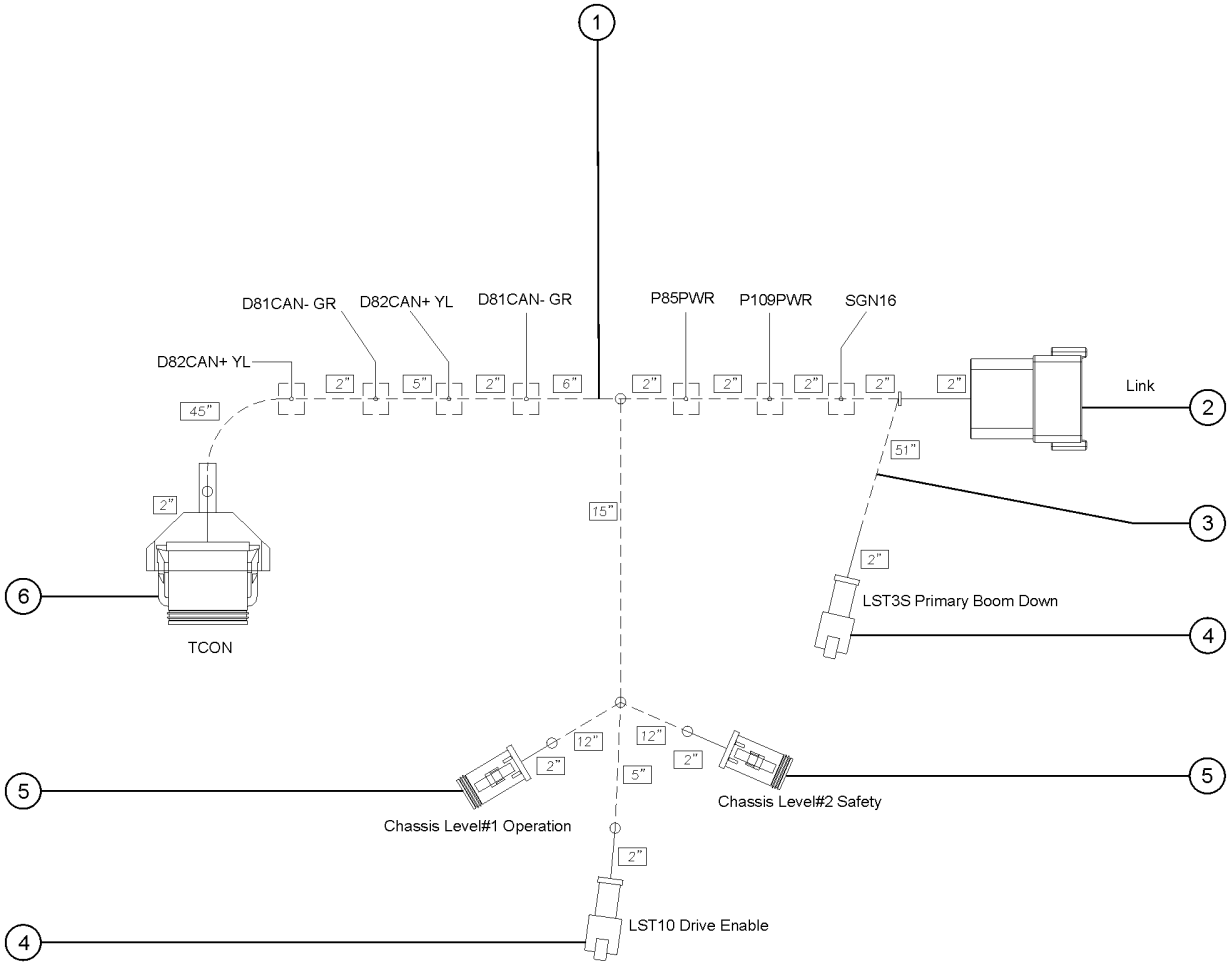

Item	Part No.	Description	Qty.
-	1287629GT	HARNESS, BOOM SENSORS, GBOX SD	1
1	39908GT	WIRE LOOM,1/2 DIA.	83 Inches
2	119070GT	CONN,RECEP 12 WAY ENDCAP DT	1
2-	54255GT	LOCK, RECEP 12WAY, 14-18GA	1
3	20973GT	WIRE LOOM,3/8 POLY SLIT	80 Inches
4	119065GT	CONN, RECEP, 2 WAY, DEUTSCH, DT	2
4-	60439GT	CONN, RECEP, 2 WAY, DEUTSCH, DT, LOCK	2
5	119058GT	CONN, PLUG, 4 WAY, DEUTSCH, DT, ENDCAP	2
5-	60429GT	LOCK, PLUG 4WAY, 14-18GA	2
6	119061GT	CONN, PLUG, 12 WAY, DEUTSCH, DT, GRAY	1
6-	60435GT	LOCK, PLUG 12WAY, 14-18GA, GRN	1

310.110A Harness Boom Sensor Gbox SD

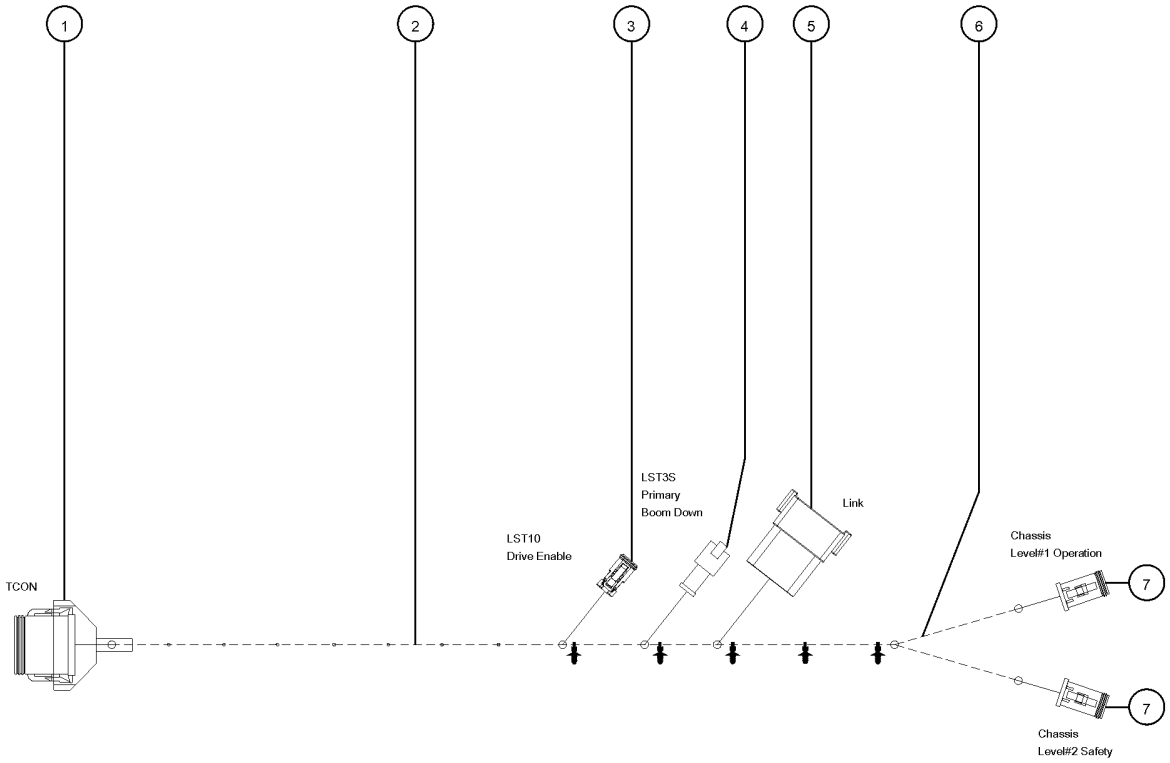

Item	Part No.	Description	Qty.
-	1294541GT	HARNESS BOOM SENSORS GBOX SD	
1	119061GT	CONN, PLUG, 12 WAY, DEUTSCH, DT, GRAY	1
1-	60435GT	LOCK, PLUG 12WAY, 14-18GA, GRN	1
2	75640GT	WIRE LOOM,3/4 DIA.	78 Inches
3	119056GT	CONN, PLUG, 2 WAY, DEUTSCH, DT, ENDCAP	1
3-	60425GT	CONN, PLUG, 2 WAY, DEUTSCH, DT, LOCK	1
4	119065GT	CONN, RECEP, 2 WAY, DEUTSCH, DT	1
4-	60439GT	CONN, RECEP, 2 WAY, DEUTSCH, DT, LOCK	1
5	54254GT	CONN, RECEP 12WAY, 14-18GA	1
5-	54255GT	LOCK, RECEP 12WAY, 14-18GA	1
6	20973GT	WIRE LOOM,3/8 POLY SLIT	16 Inches
7	119058GT	CONN, PLUG, 4 WAY, DEUTSCH, DT, ENDCAP	2
7-	60429GT	LOCK, PLUG 4WAY, 14-18GA	2

310.111 Harness, Boom Sensor, Link

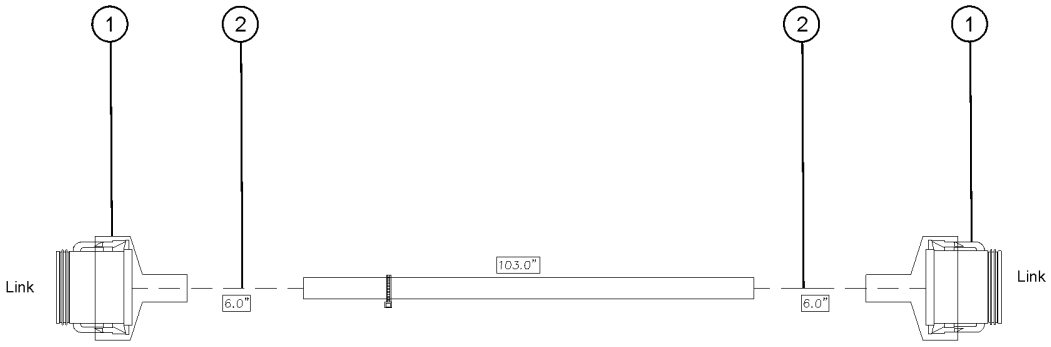

310.111 Harness, Boom Sensor, Link

Item	*Part No.*	*Description*	*Qty.*
-	1287630GT	HARNESS, BOOM SENSORS,LINK	1
1	119062GT	CONN, PLUG, 12 WAY, DEUTSCH, DT, BLACK	2
1-	60435GT	LOCK, PLUG 12WAY, 14-18GA, GRN	2
1B	1284724GT	BOOT, RECEP, 12 WAY, DT, GY for 119062	2
2	75640GT	WIRE LOOM,3/4 DIA.	12 Inches

310.112 Harness, Drive Enable Limit Switch

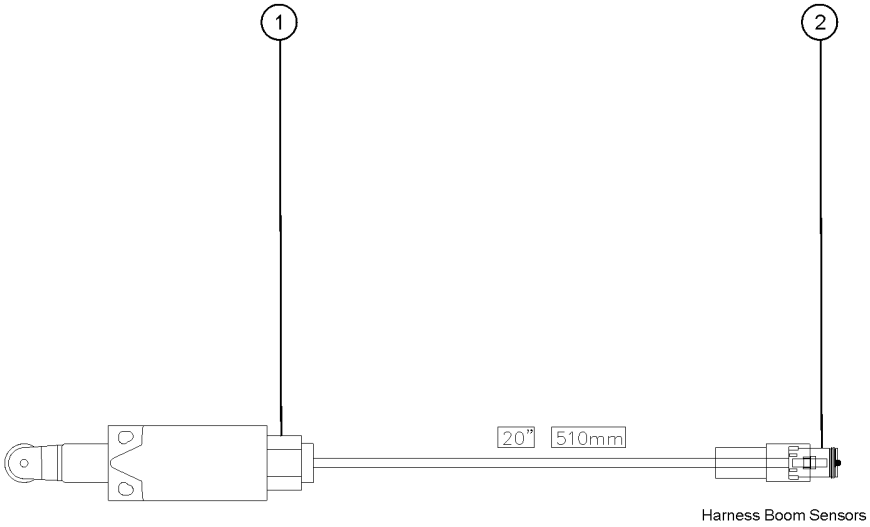

310.112 Harness, Drive Enable Limit Switch

Item	*Part No.*	*Description*	*Qty.*
-	1280871GT	HARNESS, LST10, DRIVE ENABLE LIMIT SWITCH	1
1	88356-13103GT	SWITCH,LIMIT,W/RLLR ARM,NO/NC	1
2	119056GT	CONN, PLUG, 2 WAY, DEUTSCH, DT, ENDCAP	1
2-	60425GT	CONN, PLUG, 2 WAY, DEUTSCH, DT, LOCK	1

310.112A Harness, LST10, S60/65XC

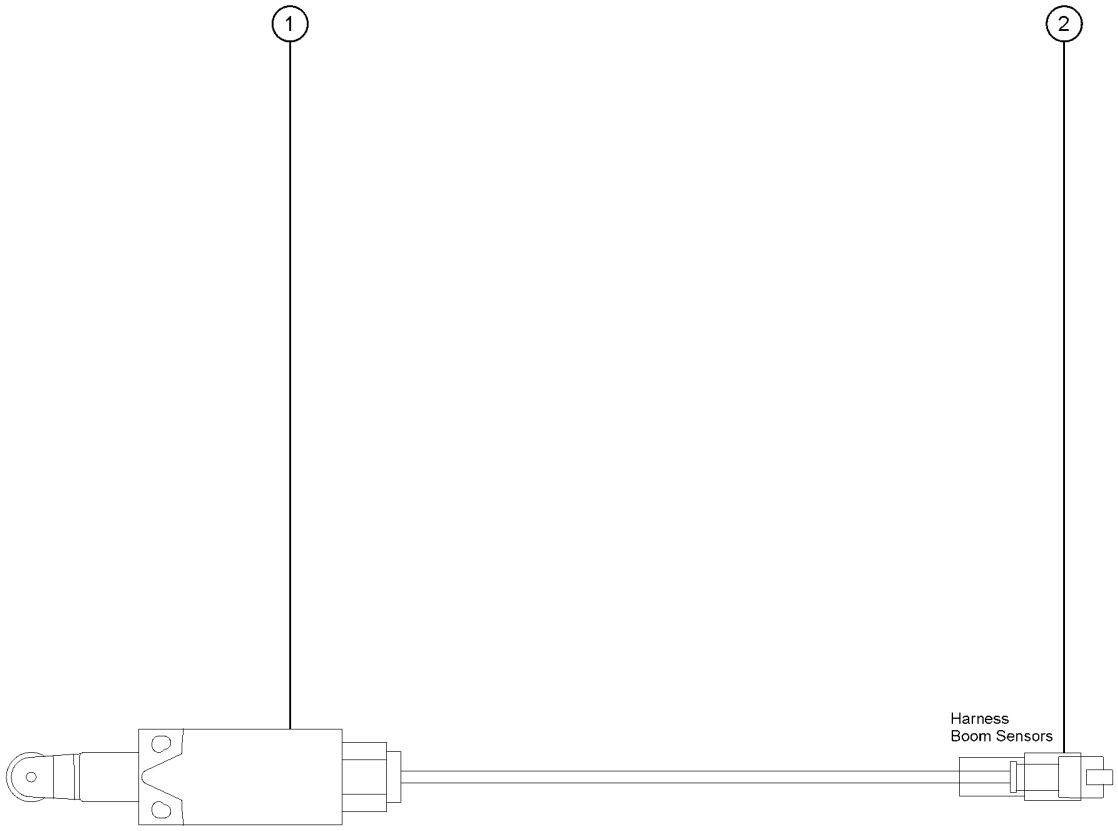

310.112A Harness, LST10, S60/65XC

Item	Part No.	Description	Qty.
-	1294573GT	HARNESS, LST10, S60/65XC	1
1	88356-13103GT	SWITCH,LIMIT,W/RLLR ARM,NO/NC	1
2	119065GT	CONN, RECEP, 2 WAY, DEUTSCH, DT	1
2-	60439GT	CONN, RECEP, 2 WAY, DEUTSCH, DT, LOCK	1

310.113 Harness, Boom Sensor, Boom

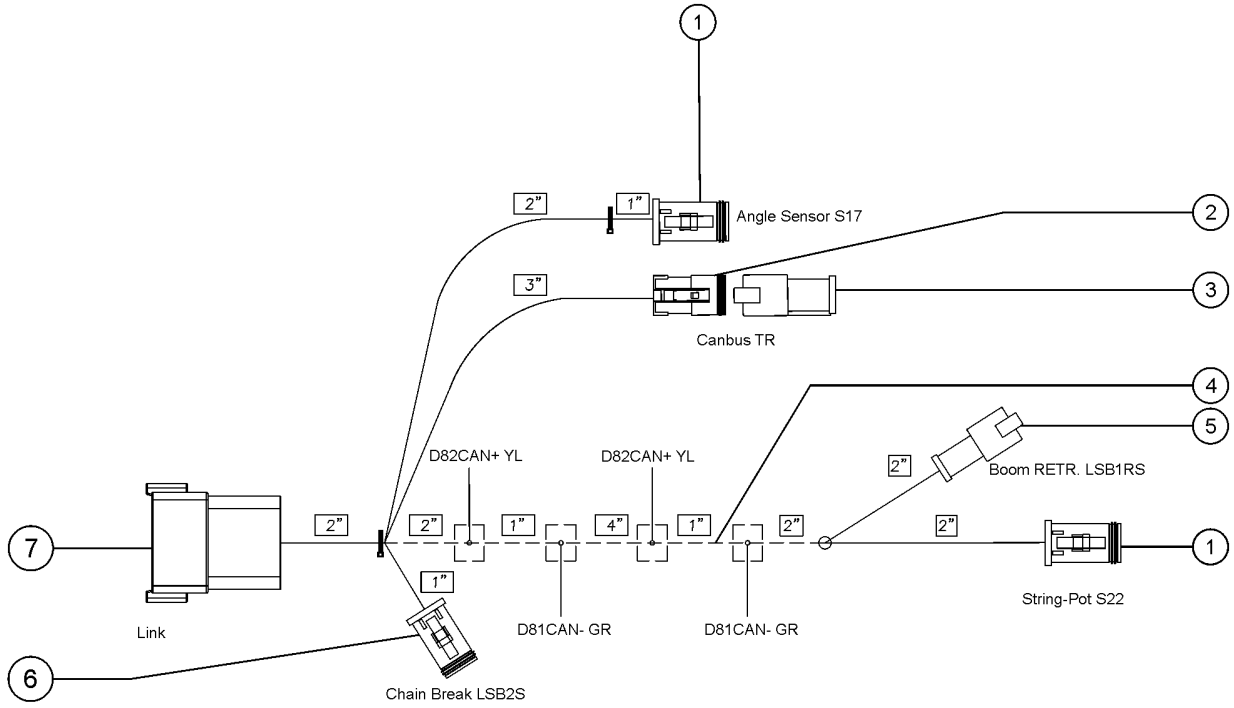

Item	Part No.	Description	Qty.
-	1287631GT	HARNESS, BOOM SENSORS,BOOM SD	1
1	119058GT	CONN, PLUG, 4 WAY, DEUTSCH, DT, ENDCAP	2
1-	60429GT	LOCK, PLUG 4WAY, 14-18GA	2
2	119057GT	CONN, PLUG, 3 WAY, DEUTSCH, DT, ENDCAP	1
2-	60459GT	LOCK,PLUG 3 WAY,SAE J1939	1
3	60452GT	CONN, RECEP, 3 WAY, DEUTSCH, DT, J1939/120OHM	1
4	39908GT	WIRE LOOM,1/2 DIA.	12 Inches
5	119065GT	CONN, RECEP, 2 WAY, DEUTSCH, DT	1
5-	60439GT	CONN, RECEP, 2 WAY, DEUTSCH, DT, LOCK	1
6	119056GT	CONN, PLUG, 2 WAY, DEUTSCH, DT, ENDCAP	1
6-	60425GT	CONN, PLUG, 2 WAY, DEUTSCH, DT, LOCK	1
7	119070GT	CONN,RECEP 12 WAY ENDCAP DT	1
7-	54255GT	LOCK, RECEP 12WAY, 14-18GA	1

310.114 Harness, LST3S, Boom Down Limit Switch

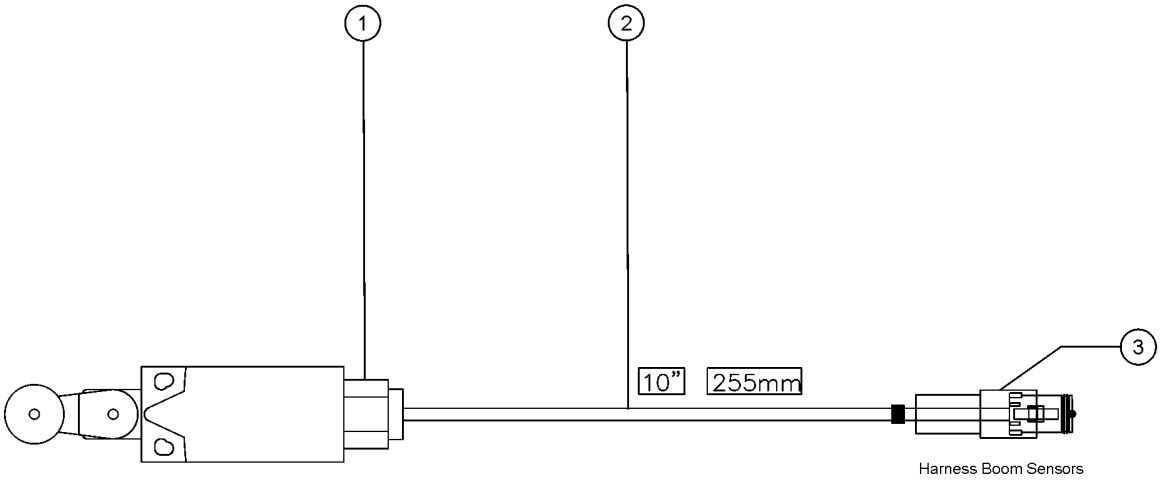

310.114 Harness, LST3S, Boom Down Limit Switch

Item	*Part No.*	*Description*	*Qty.*
-	1280872GT	HARNESS, LST3S, BOOM DOWN LIMIT SWITCH	1
1	88356-11103GT	SWITCH,LIMIT,W/RLR ARM,NO/NC	1
2	73814GT	CONN,DSCH,BOOT,DT2S-BT	1
3	119056GT	CONN, PLUG, 2 WAY, DEUTSCH, DT, ENDCAP	1
3-	60425GT	CONN, PLUG, 2 WAY, DEUTSCH, DT, LOCK	1

310.114A Harness, LST3S, S60/65XC

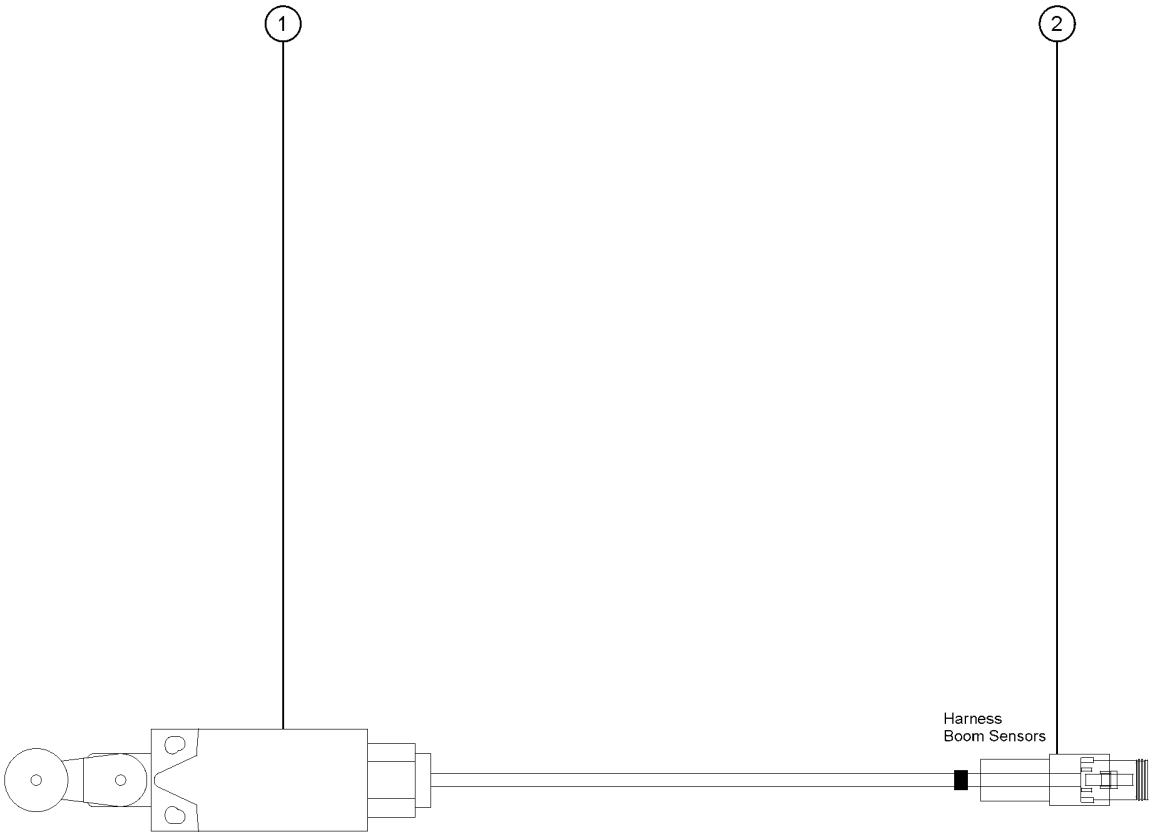

310.114A Harness, LST3S, S60/65XC

Item	Part No.	Description	Qty.
-	1294563GT	HARNESS, LST3S, S60/65XC	1
1	88356-11103GT	SWITCH,LIMIT,W/RLR ARM,NO/NC	1
2	119065GT	CONN, RECEP, 2 WAY, DEUTSCH, DT	1
2-	60425GT	CONN, PLUG, 2 WAY, DEUTSCH, DT, LOCK	1

310.115 Harness, LSB1RS

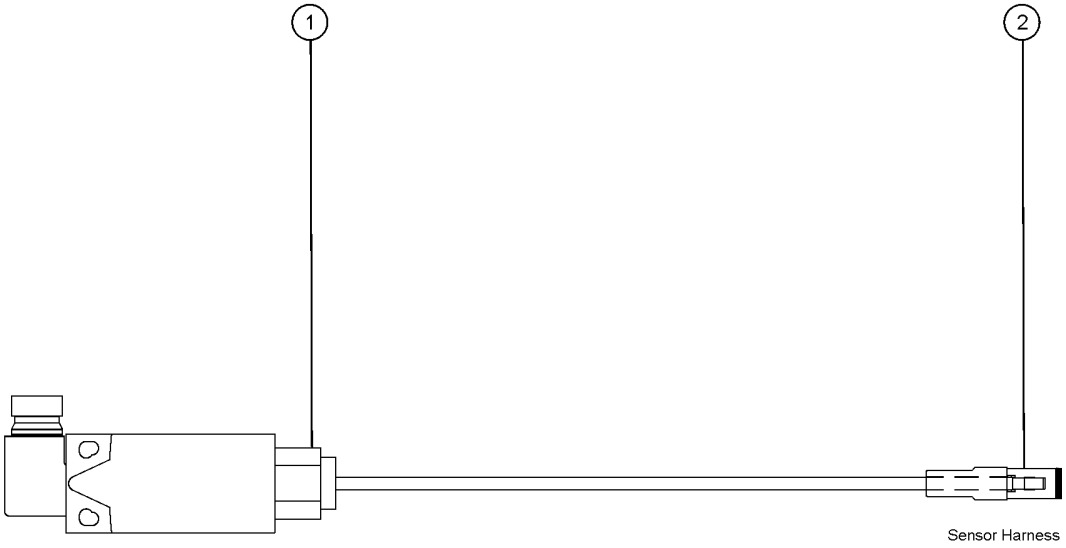

310.115 Harness, LSB1RS

Item	*Part No.*	*Description*	*Qty.*
-	1269714GT	HARNESS, LSB1RS, S80/85	1
1	88356-32163GT	SWITCH,LIMIT,TABULATED,BLUE	1
2	119761GT	CONN PLUG 2 WAY EXTEND DT	1
2-	60425GT	CONN, PLUG, 2 WAY, DEUTSCH, DT, LOCK	1

310.116 Harness, LSB2S

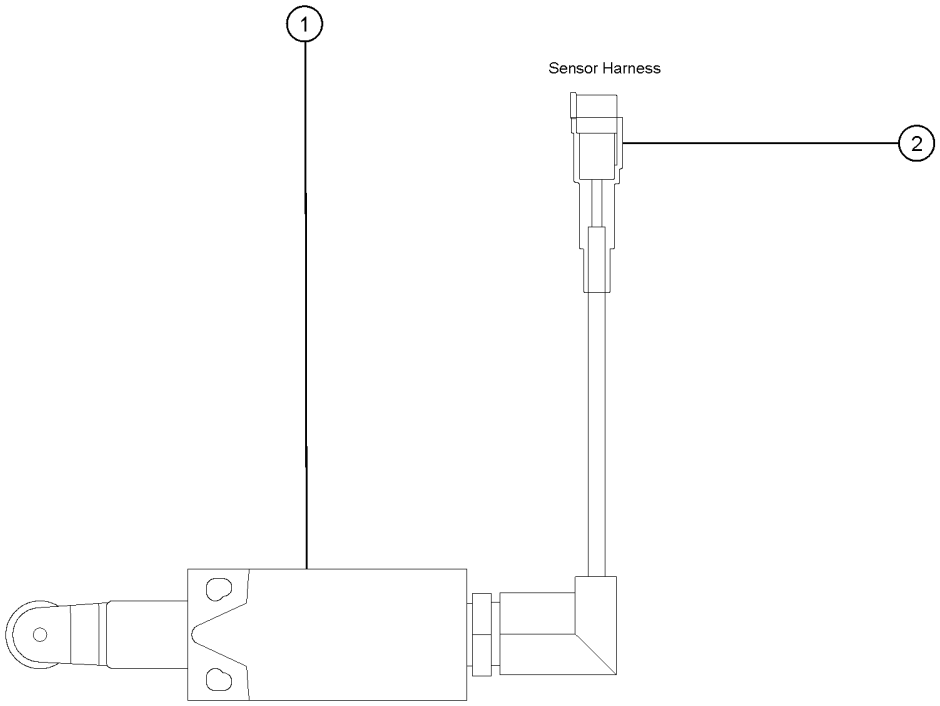

310.116 Harness, LSB2S

Item	*Part No.*	*Description*	*Qty.*
-	1269717GT	HARNESS, LSB2S, S80/85	1
1	88356-13107GT	SWITCH,LIMIT,TABULATE,BLUE	1
2	119065GT	CONN, RECEP, 2 WAY, DEUTSCH, DT	1
2-	60439GT	CONN, RECEP, 2 WAY, DEUTSCH, DT, LOCK	1

310.117 Harness S60/65XC Function, Manifold

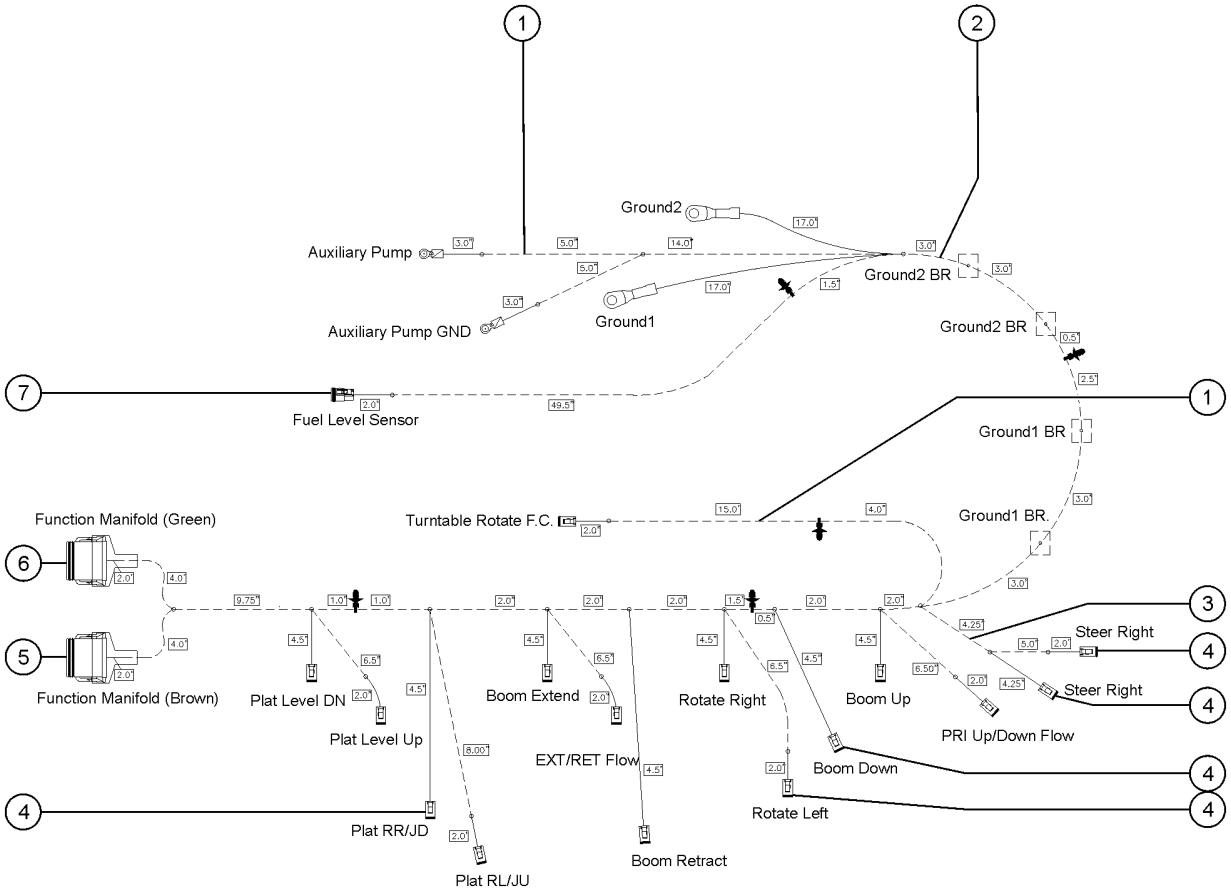

310.117 Harness S60/65XC Function, Manifold

Item	Part No.	Description	Qty.
-	1278863GT	HARNESS S60/65XC FUNCTION, MANIFOLD	1
1	99087GT	WIRE LOOM,1/4 DIA. SLIT	75.75 Inches
2	75640GT	WIRE LOOM,3/4 DIA.	38.75 Inches
3	20973GT	WIRE LOOM,3/8 POLY SLIT	12 Inches
4	119056GT	CONN, PLUG, 2 WAY, DEUTSCH, DT, ENDCAP	15
4-	60425GT	CONN, PLUG, 2 WAY, DEUTSCH, DT, LOCK	15
5	119064GT	CONN PLUG 12 WAY ENDCAP DT BR	1
5-	60435GT	LOCK, PLUG 12WAY, 14-18GA, GRN	1
6	119063GT	CONN PLUG 12 WAY ENDCAP DT GR	1
6-	60435GT	LOCK, PLUG 12WAY, 14-18GA, GRN	1
7	60426GT	CONN,PLUG 3 WAY, 14-18GA	1
7-	60427GT	CONN, PLUG, 3 WAY, DEUTSCH, DT, LOCK	1

310.118 Harness, S60/65XC Deutz 2.9

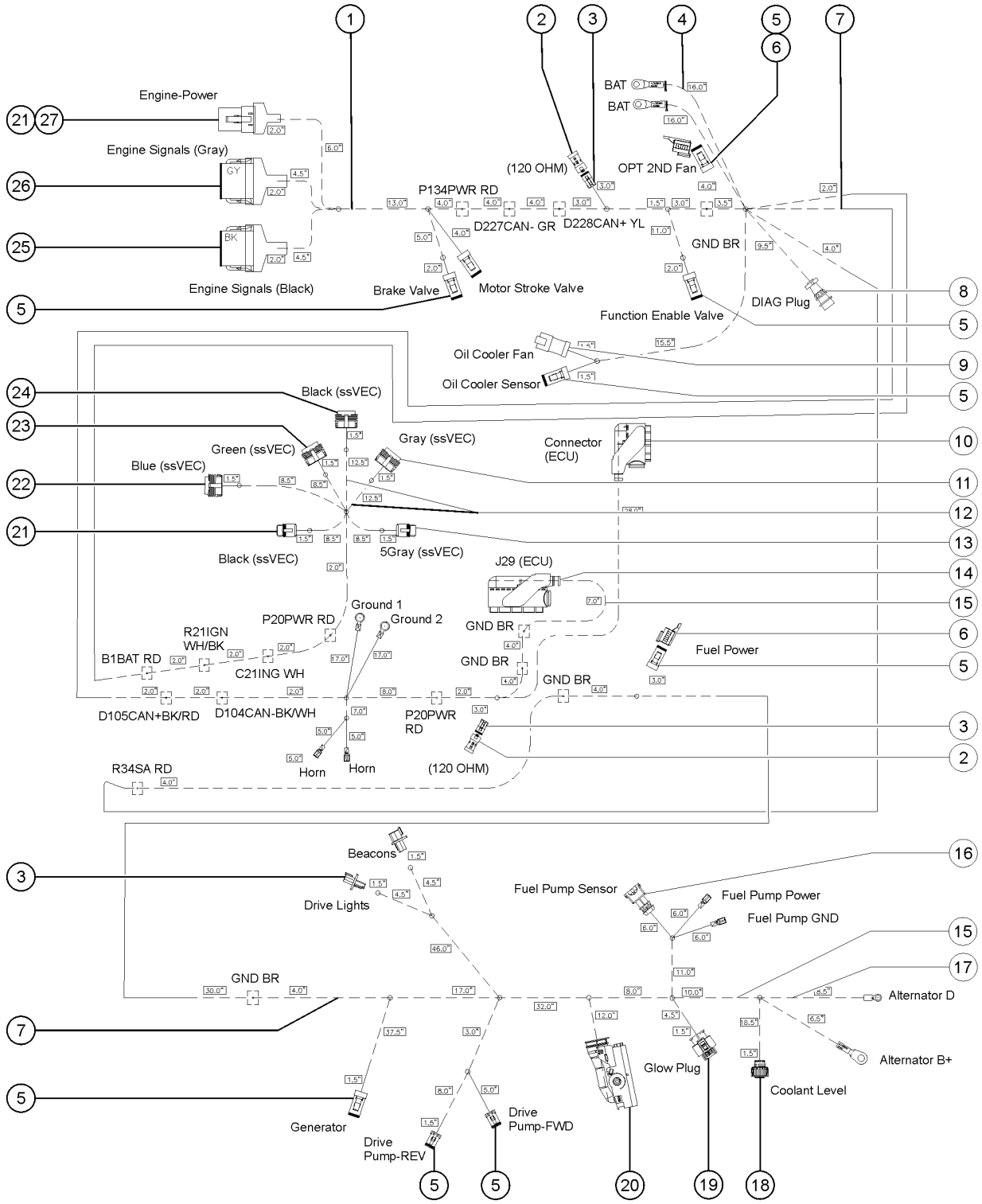

310.118 Harness, S60/65XC Deutz 2.9

Item	Part No.	Description	Qty.
-	1278859GT	HARNESS S60/65XC DEUTZ 2.9	1
-	94652GT	WIRE LOOM,1/2DIA.SLIT HI-TEMP*	9 Inches
1	101191GT	WIRE LOOM,1"DIA.SLIT,HI TEMP to SN S65XCH-46139	65 Inches
1B	101191GT	WIRE LOOM,1"DIA.SLIT,HI TEMP from SN S65XCH-46140	77 Inches
2	60452GT	CONN, RECEP, 3 WAY, DEUTSCH, DT, J1939/120OHM	3
3	119057GT	CONN, PLUG, 3 WAY, DEUTSCH, DT, ENDCAP	2
3-	60459GT	LOCK,PLUG 3 WAY,SAE J1939	
4	20973GT	WIRE LOOM,3/8 POLY SLIT to SN S65XCH-46139	232 Inches
4B	20973GT	WIRE LOOM,3/8 POLY SLIT from SN S65XCH-46140	255 Inches
5	119065GT	CONN, RECEP, 2 WAY, DEUTSCH, DT	2
5-	60439GT	CONN, RECEP, 2 WAY, DEUTSCH, DT, LOCK	2
6	119056GT	CONN, PLUG, 2 WAY, DEUTSCH, DT, ENDCAP	8
6-	60425GT	CONN, PLUG, 2 WAY, DEUTSCH, DT, LOCK	8
7	150103GT	WIRE LOOM,1.25"NYLON,HIGH TEMP	123 Inches
8	822448GT	CONN,REC,CANN TR 12WAY,SIZE14	1
9	229110GT	CONN, RECEP, 2 WAY, DEUTSCH, DT, CAP	1
10	822464GT	CONN,8WAY CBT MALE,BLACK	1
10-	822466GT	LOCK,8WAY CBT TP2 SEALED	1
11	822465GT	CONN,8WAY CBT MALE,GRAY	1
11-	822466GT	LOCK,8WAY CBT TP2 SEALED	1
12	822462GT	CONN, PLUG, 8 WAY, EATON, METRI-PACK 150, BLUE	1
12-	822466GT	LOCK,8WAY CBT TP2 SEALED	1
13	822438GT	CONN KIT,RECEP 60POS,AMP MQS 1.5	1
14	822439GT	CONN KIT,94POS,AMP MQS1.5/MCP2.8	1

310.118 Harness, S60/65XC Deutz 2.9

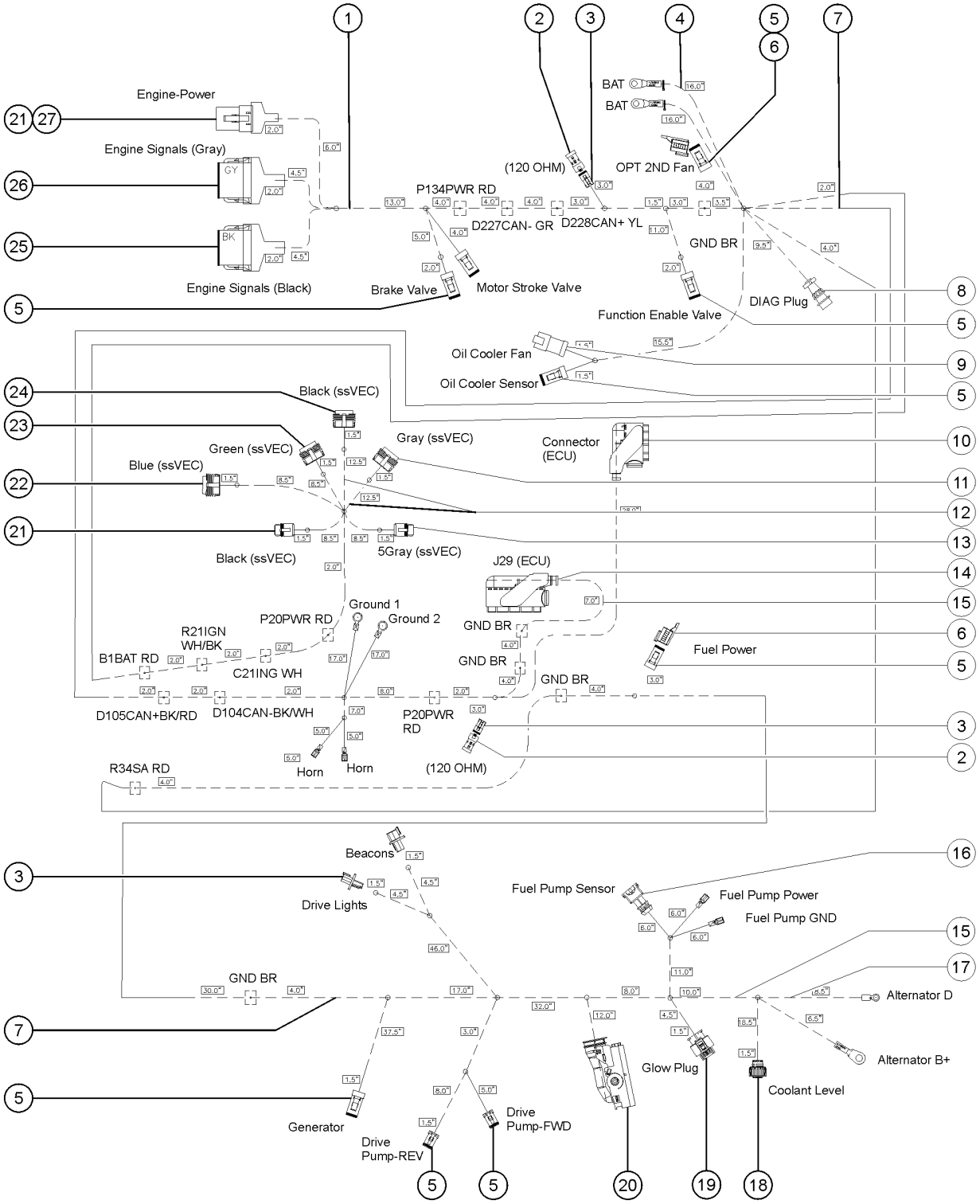

310.118 Harness, S60/65XC Deutz 2.9

Item	Part No.	Description	Qty.
15	1261898GT	WIRE LOOM 3/4 DIA SLIT HI TEMP	50 Inches
16	99087GT	WIRE LOOM,1/4 DIA. SLIT to SN S65XCH-46139	9 Inches
16B	99087GT	WIRE LOOM,1/4 DIA. SLIT from SN S65XCH-46140	29 Inches
17	56687GT	CONN, RECEP, 2 WAY, AMP, JR-PWR	1
18	822445GT	CONN,CIRC. AMP 4WAY,BLACK	1
19	822442GT	CONN,REC 2 WAY,AMP 8MM NGI, BLACK	1
20	822436GT	CONN,RECEP 62POS,AMP MCP1.5K/2.8	1
21	1269704GT	CONNECTOR, RECEP, 2WAY, FL	1
21-	60439GT	CONN, RECEP, 2 WAY, DEUTSCH, DT, LOCK	1
22	75629GT	CONN,RECEP 3 WAY,W/FLANGE	1
22-	60441GT	CONN, RECEP, 3 WAY, DEUTSCH, DT, LOCK	1
23	822467GT	CONN,2WAY CBT MALE,BLACK	1
23-	822469GT	LOCK,2WAY CBT TP2 SEALED	
24	822468GT	CONN,2WAY CBT MALE,GRAY	1
24-	822469GT	LOCK,2WAY CBT TP2 SEALED	
25	822463GT	CONN,8WAY CBT MALE,GREEN	1
25-	822466GT	LOCK,8WAY CBT TP2 SEALED	
26	119062GT	CONN, PLUG, 12 WAY, DEUTSCH, DT, BLACK	1
26-	60435GT	LOCK, PLUG 12WAY, 14-18GA, GRN	1
27	119061GT	CONN, PLUG, 12 WAY, DEUTSCH, DT, GRAY	1
27-	60435GT	LOCK, PLUG 12WAY, 14-18GA, GRN	1
28	60527GT	CONN, PLUG, 4 WAY, DEUTSCH, DTP	1
28-	60428GT	CONN, PLUG 4WAY, 14-18GA	1

310.118A Harness, S60/65XC Engine Deutz TD 2011

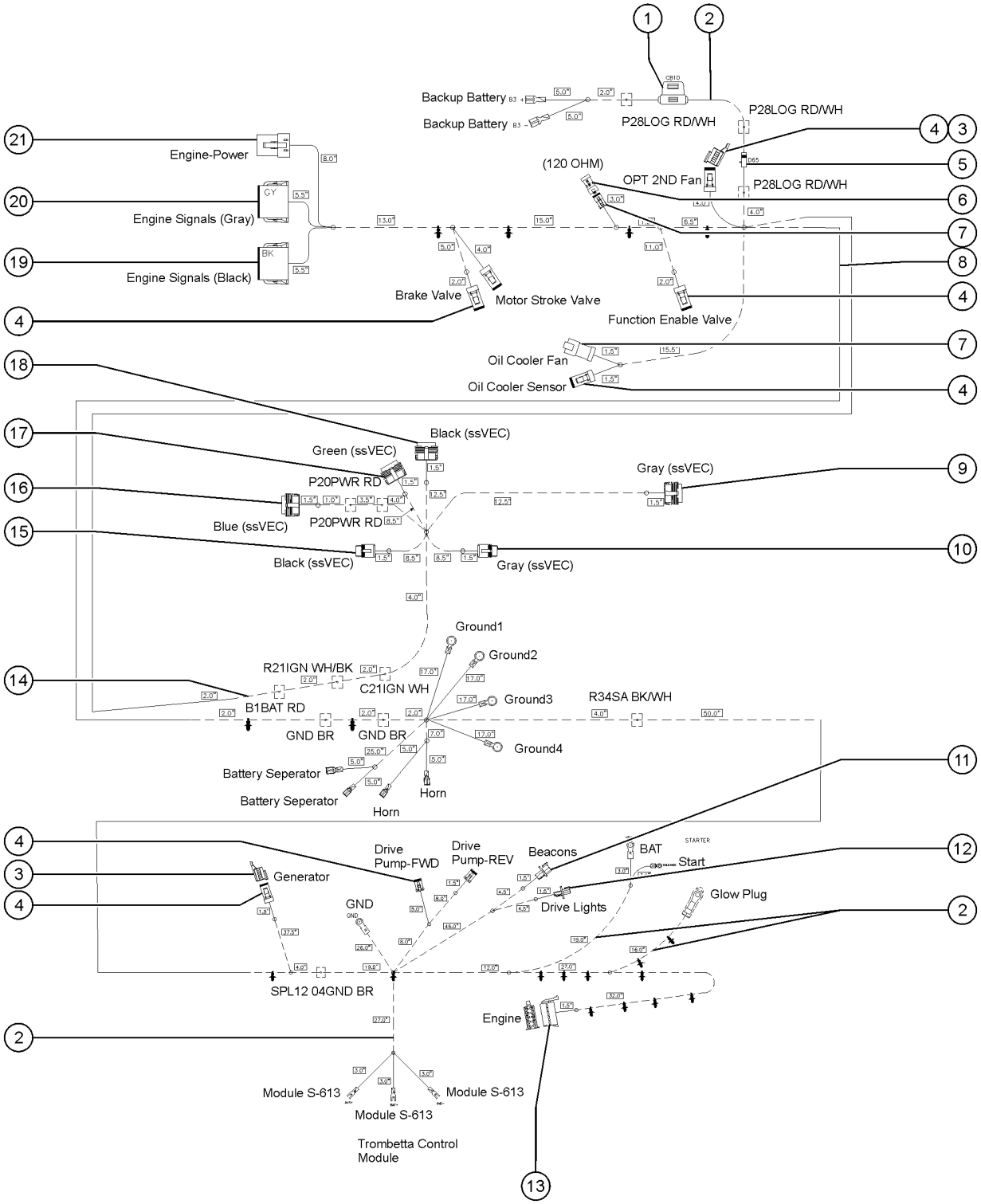

310.118A Harness, S60/65XC Engine Deutz TD 2011

Item	Part No.	Description	Qty.
-	1280847GT	HARNESS S60/65XC ENGINE DEUTZ TD 2011	1
1	1285583GT	CIRCUIT BREAKER 10A	1
1-	121657GT	FUSE HOLDER,ATC 1-20 AMPS	1
2	20973GT	WIRE LOOM,3/8 POLY SLIT	207.5 Inches
3	229110GT	CONN, RECEP, 2 WAY, DEUTSCH, DT, CAP	2
4	119056GT	CONN, PLUG, 2 WAY, DEUTSCH, DT, ENDCAP	8
4-	60425GT	CONN, PLUG, 2 WAY, DEUTSCH, DT, LOCK	8
5	1279599GT	DIODE,SCHOTTKY 20A,P600	1
6	60452GT	CONN, RECEP, 3 WAY, DEUTSCH, DT, J1939/120OHM	1
7	119065GT	CONN, RECEP, 2 WAY, DEUTSCH, DT	1
7-	60439GT	CONN, RECEP, 2 WAY, DEUTSCH, DT, LOCK	1
8	150103GT	WIRE LOOM,1.25"NYLON,HIGH TEMP	134 Inches
9	822465GT	CONN,8WAY CBT MALE,GRAY	1
9-	822466GT	LOCK,8WAY CBT TP2 SEALED	1
10	822468GT	CONN,2WAY CBT MALE,GRAY	1
10-	822469GT	LOCK,2WAY CBT TP2 SEALED	1
11	75629GT	CONN,RECEP 3 WAY,W/FLANGE	1
11-	60441GT	CONN, RECEP, 3 WAY, DEUTSCH, DT, LOCK	1
12	1269704GT	CONNECTOR, RECEP, 2WAY, FL	1
12-	60439GT	CONN, RECEP, 2 WAY, DEUTSCH, DT, LOCK	1
13	1280592GT	CONNECTOR, 10 WAY, AMP	1
14	101191GT	WIRE LOOM,1"DIA.SLIT,HI TEMP	45 Inches
15	822467GT	CONN,2WAY CBT MALE,BLACK	1
15-	822469GT	LOCK,2WAY CBT TP2 SEALED	1
16	822462GT	CONN, PLUG, 8 WAY, EATON, METRI-PACK 150, BLUE	1
16-	822466GT	LOCK,8WAY CBT TP2 SEALED	1

310.118A Harness, S60/65XC Engine Deutz TD 2011

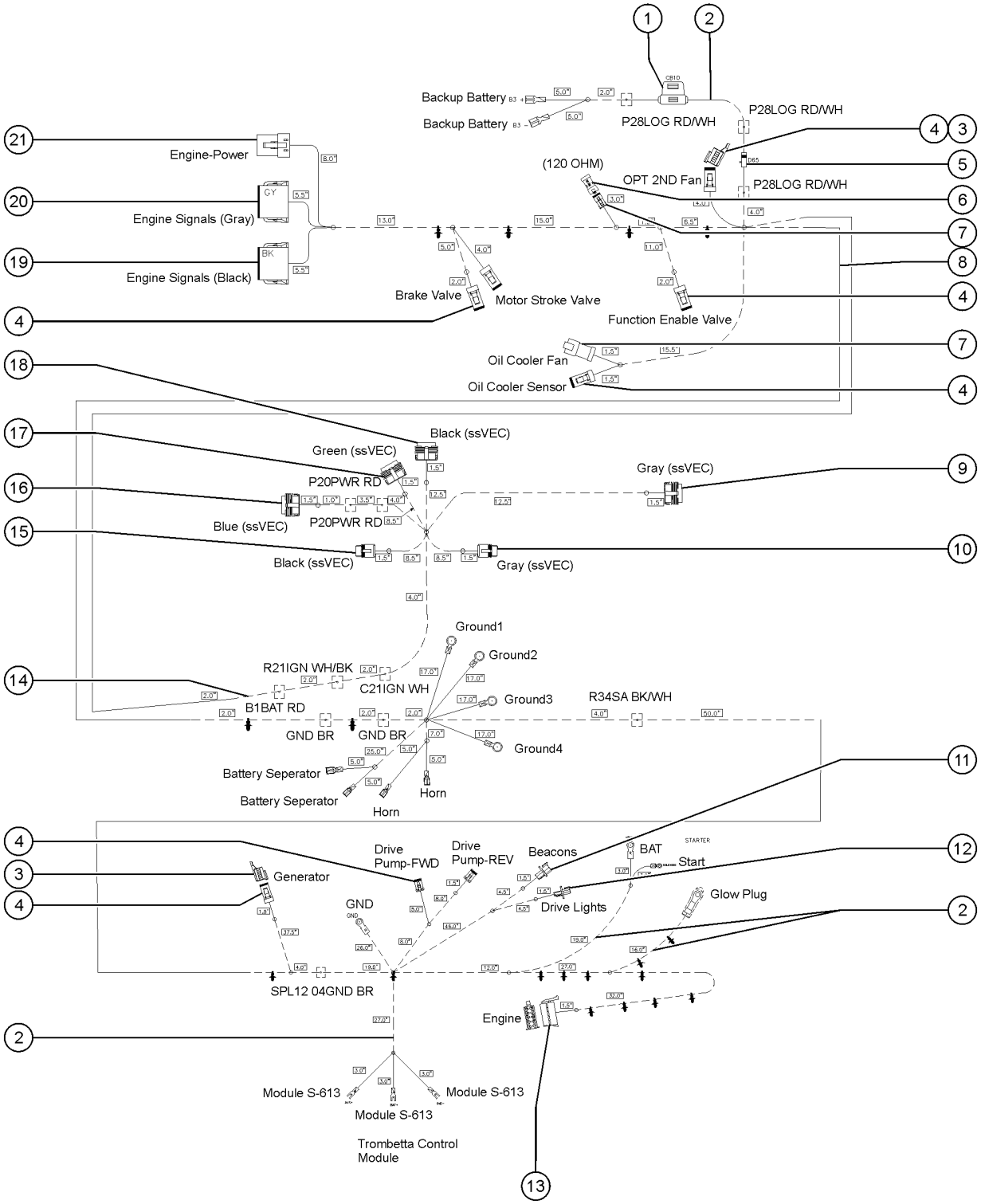

310.118A Harness, S60/65XC Engine Deutz TD 2011

Item	Part No.	Description	Qty.
17	822463GT	CONN,8WAY CBT MALE,GREEN	1
17-	822466GT	LOCK,8WAY CBT TP2 SEALED	1
18	822464GT	CONN,8WAY CBT MALE,BLACK	1
18-	822466GT	LOCK,8WAY CBT TP2 SEALED	1
19	119062GT	CONN, PLUG, 12 WAY, DEUTSCH, DT, BLACK	1
19-	60435GT	LOCK, PLUG 12WAY, 14-18GA, GRN	1
20	119061GT	CONN, PLUG, 12 WAY, DEUTSCH, DT, GRAY	1
20-	60435GT	LOCK, PLUG 12WAY, 14-18GA, GRN	1
21	73720GT	CONN,PLUG 4WAY,12-14GA***	1
21-	60528GT	LOCK,PLUG 4 WAY,12-14GA***	1

310.118AA Harness S60/65XC Engine Deutz TD 2011

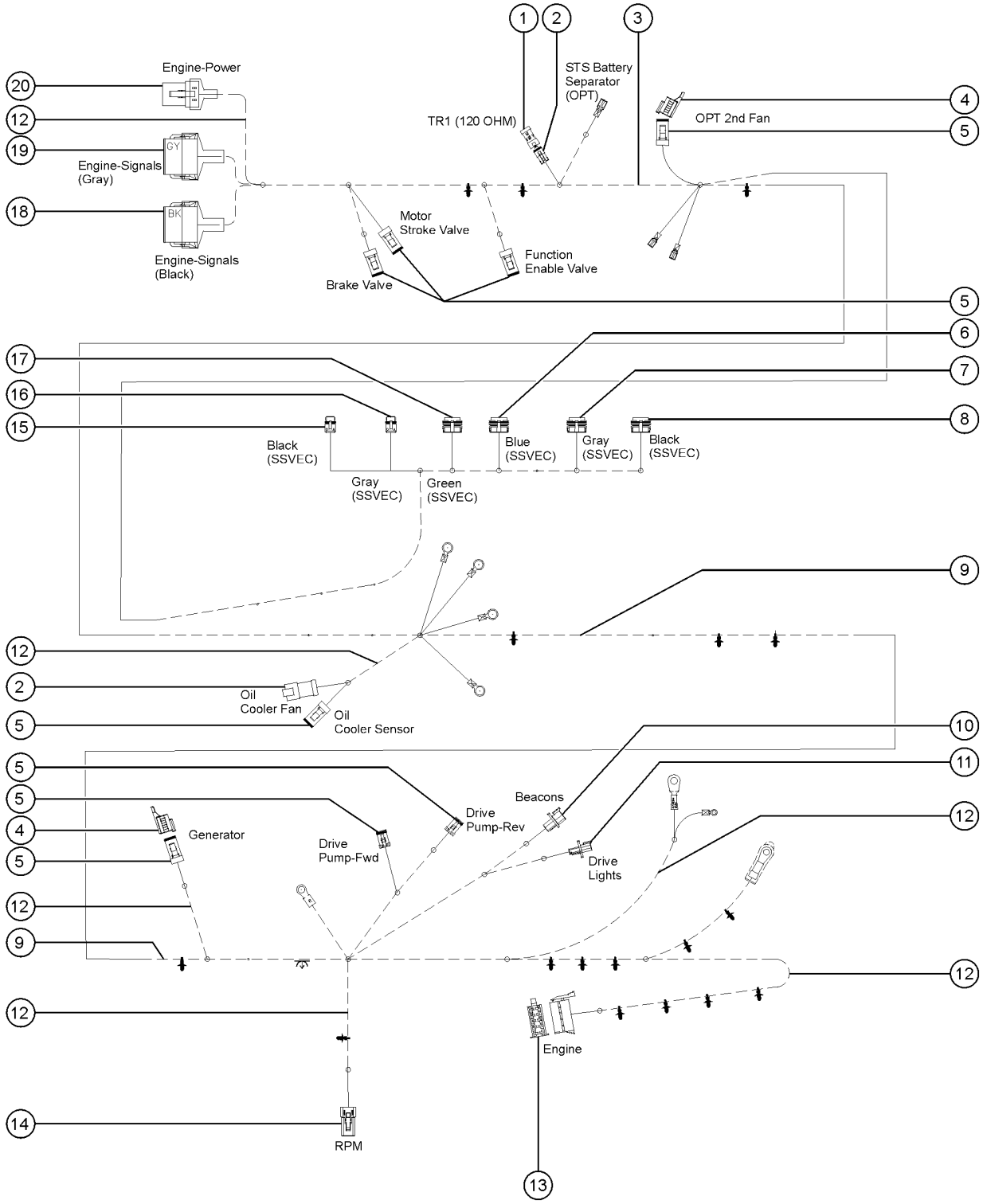

310.118AA Harness S60/65XC Engine Deutz TD 2011

Item	Part No.	Description	Qty.
-	1294547GT	HARNESS S60/65XC ENGINE DEUTZ TD 2011	
1	60452GT	CONN, RECEP, 3 WAY, DEUTSCH, DT, J1939/120OHM	1
2	119065GT	CONN, RECEP, 2 WAY, DEUTSCH, DT	1
2-	60439GT	CONN, RECEP, 2 WAY, DEUTSCH, DT, LOCK	1
3	101191GT	WIRE LOOM,1"DIA.SLIT,HI TEMP	45 Inches
4	229110GT	CONN, RECEP, 2 WAY, DEUTSCH, DT, CAP	2
5	119056GT	CONN, PLUG, 2 WAY, DEUTSCH, DT, ENDCAP	8
5-	60425GT	CONN, PLUG, 2 WAY, DEUTSCH, DT, LOCK	8
6	822462GT	CONN, PLUG, 8 WAY, EATON, METRI-PACK 150, BLUE	1
6-	822466GT	LOCK,8WAY CBT TP2 SEALED	1
7	822465GT	CONN,8WAY CBT MALE,GRAY	1
7-	822466GT	LOCK,8WAY CBT TP2 SEALED	1
8	822464GT	CONN,8WAY CBT MALE,BLACK	1
8-	822466GT	LOCK,8WAY CBT TP2 SEALED	1
9	150103GT	WIRE LOOM,1.25"NYLON,HIGH TEMP	134 Inches
10	75629GT	CONN,RECEP 3 WAY,W/FLANGE	1
10-	60441GT	CONN, RECEP, 3 WAY, DEUTSCH, DT, LOCK	1
11	1269704GT	CONNECTOR, RECEP, 2WAY, FL	1
11-	60439GT	CONN, RECEP, 2 WAY, DEUTSCH, DT, LOCK	1
12	20973GT	WIRE LOOM,3/8 POLY SLIT	136 Inches
13	1280592GT	CONNECTOR, 10 WAY, AMP	1
14	60531GT	CONN,PLUG 2 WAY,12-14GA	1
14-	60532GT	LOCK,PLUG 2 WAY,12-14GA	1
15	822467GT	CONN,2WAY CBT MALE,BLACK	1
15-	822469GT	LOCK,2WAY CBT TP2 SEALED	1
16	822468GT	CONN,2WAY CBT MALE,GRAY	1

310.118AA Harness S60/65XC Engine Deutz TD 2011

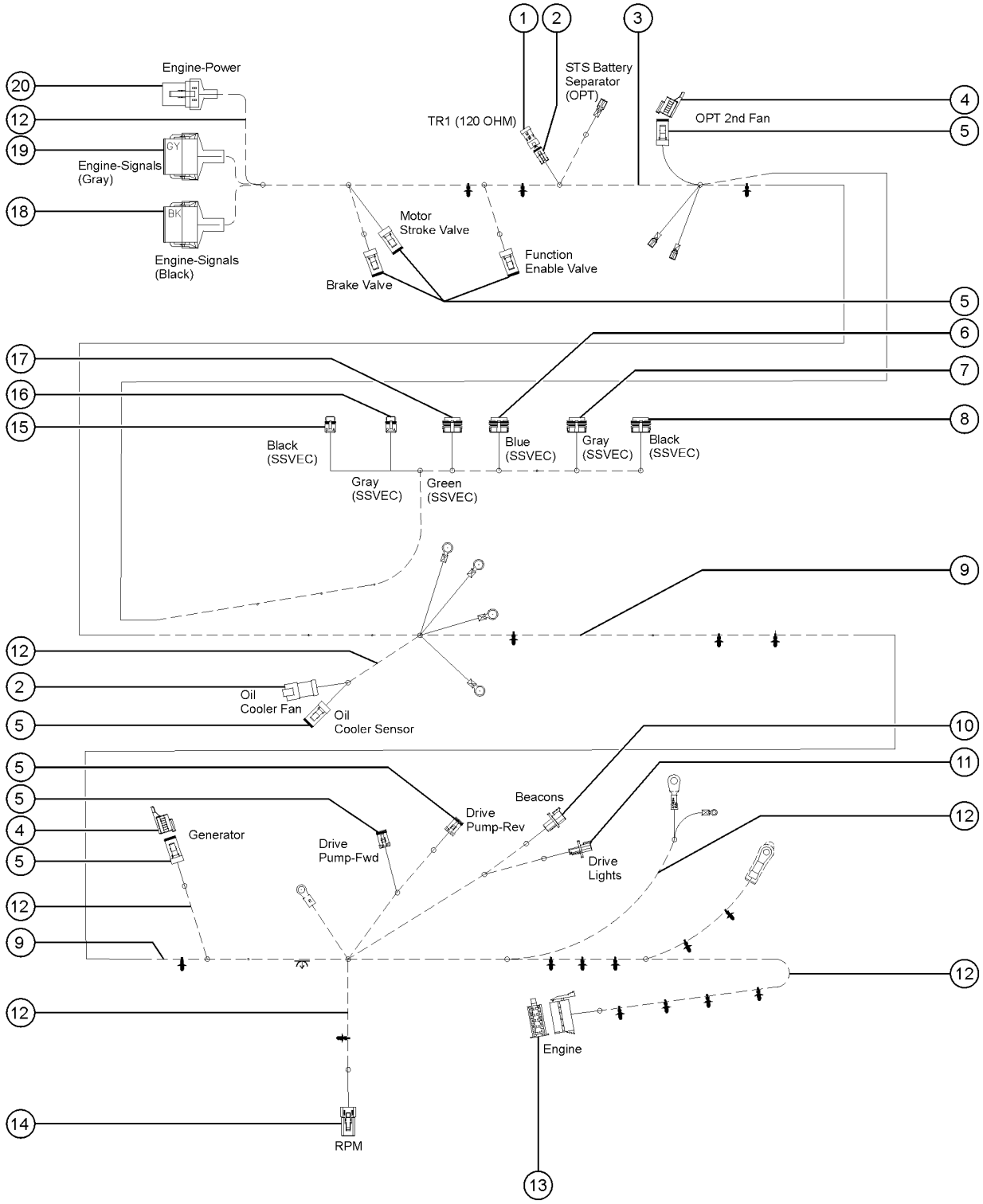

310.118AA Harness S60/65XC Engine Deutz TD 2011

Item	Part No.	Description	Qty.
16-	822469GT	LOCK,2WAY CBT TP2 SEALED	1
17	822463GT	CONN,8WAY CBT MALE,GREEN	1
17-	822466GT	LOCK,8WAY CBT TP2 SEALED	1
18	119062GT	CONN, PLUG, 12 WAY, DEUTSCH, DT, BLACK	1
18-	60435GT	LOCK, PLUG 12WAY, 14-18GA, GRN	1
19	119061GT	CONN, PLUG, 12 WAY, DEUTSCH, DT, GRAY	1
19-	60435GT	LOCK, PLUG 12WAY, 14-18GA, GRN	1
20	60527GT	CONN, PLUG, 4 WAY, DEUTSCH, DTP	1
20-	60528GT	LOCK,PLUG 4 WAY,12-14GA***	1

310.118B Harness, Engine, Ford MSG425 T4

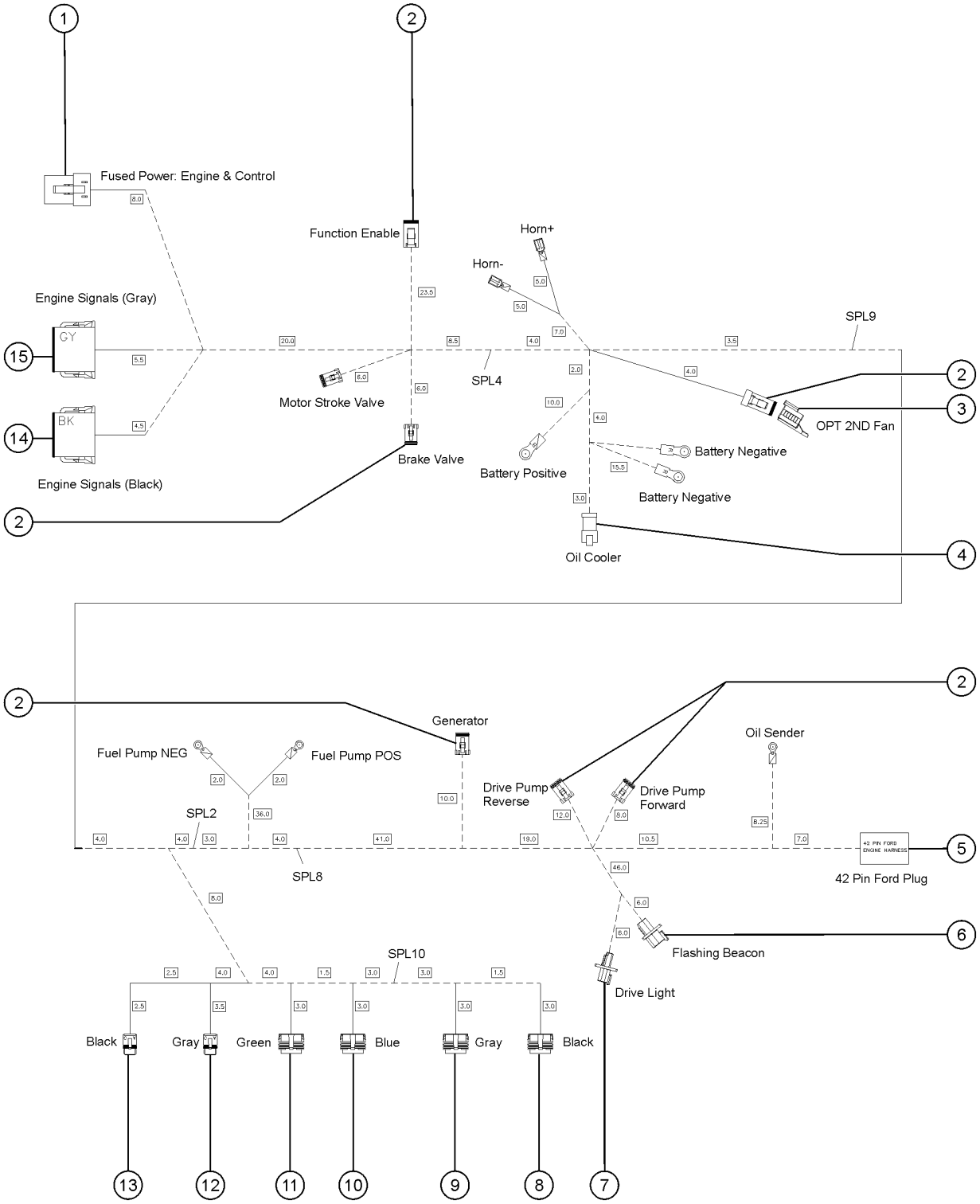

310.118B Harness, Engine, Ford MSG425 T4

Item	Part No.	Description	Qty.
-	1279902GT	HARNESS, ENGINE, FORD	1
1	60527GT	CONN, PLUG, 4 WAY, DEUTSCH, DTP	1
1-	60528GT	LOCK,PLUG 4 WAY,12-14GA***	1
2	119056GT	CONN, PLUG, 2 WAY, DEUTSCH, DT, ENDCAP	8
2-	60425GT	CONN, PLUG, 2 WAY, DEUTSCH, DT, LOCK	8
3	229110GT	CONN, RECEP, 2 WAY, DEUTSCH, DT, CAP	1
4	119067GT	CONN, RECEP, 4 WAY, DEUTSCH, DT, ENDCAP	1
4-	60443GT	LOCK, RECEP 4WAY, 14-18GA	1
5	88756GT	CONN KIT,42 PIN FORD***	1
6	75629GT	CONN,RECEP 3 WAY,W/FLANGE	1
6-	60441GT	CONN, RECEP, 3 WAY, DEUTSCH, DT, LOCK	1
7	1269704GT	CONNECTOR, RECEP, 2WAY, FL	1
7-	60439GT	CONN, RECEP, 2 WAY, DEUTSCH, DT, LOCK	1
8	822464GT	CONN,8WAY CBT MALE,BLACK	1
8-	822466GT	LOCK,8WAY CBT TP2 SEALED	1
9	822465GT	CONN,8WAY CBT MALE,GRAY	1
9-	822466GT	LOCK,8WAY CBT TP2 SEALED	1
10	822462GT	CONN, PLUG, 8 WAY, EATON, METRI-PACK 150, BLUE	1
10-	822466GT	LOCK,8WAY CBT TP2 SEALED	1
11	822463GT	CONN,8WAY CBT MALE,GREEN	1
11-	822466GT	LOCK,8WAY CBT TP2 SEALED	1
12	822468GT	CONN,2WAY CBT MALE,GRAY	1
12-	822469GT	LOCK,2WAY CBT TP2 SEALED	1
13	822467GT	CONN,2WAY CBT MALE,BLACK	1
13-	822469GT	LOCK,2WAY CBT TP2 SEALED	1
14	119062GT	CONN, PLUG, 12 WAY, DEUTSCH, DT, BLACK	1
14-	60441GT	CONN, RECEP, 3 WAY, DEUTSCH, DT, LOCK	1
15	119061GT	CONN, PLUG, 12 WAY, DEUTSCH, DT, GRAY	1

310.118C Harness, Engine, Perkins 404D

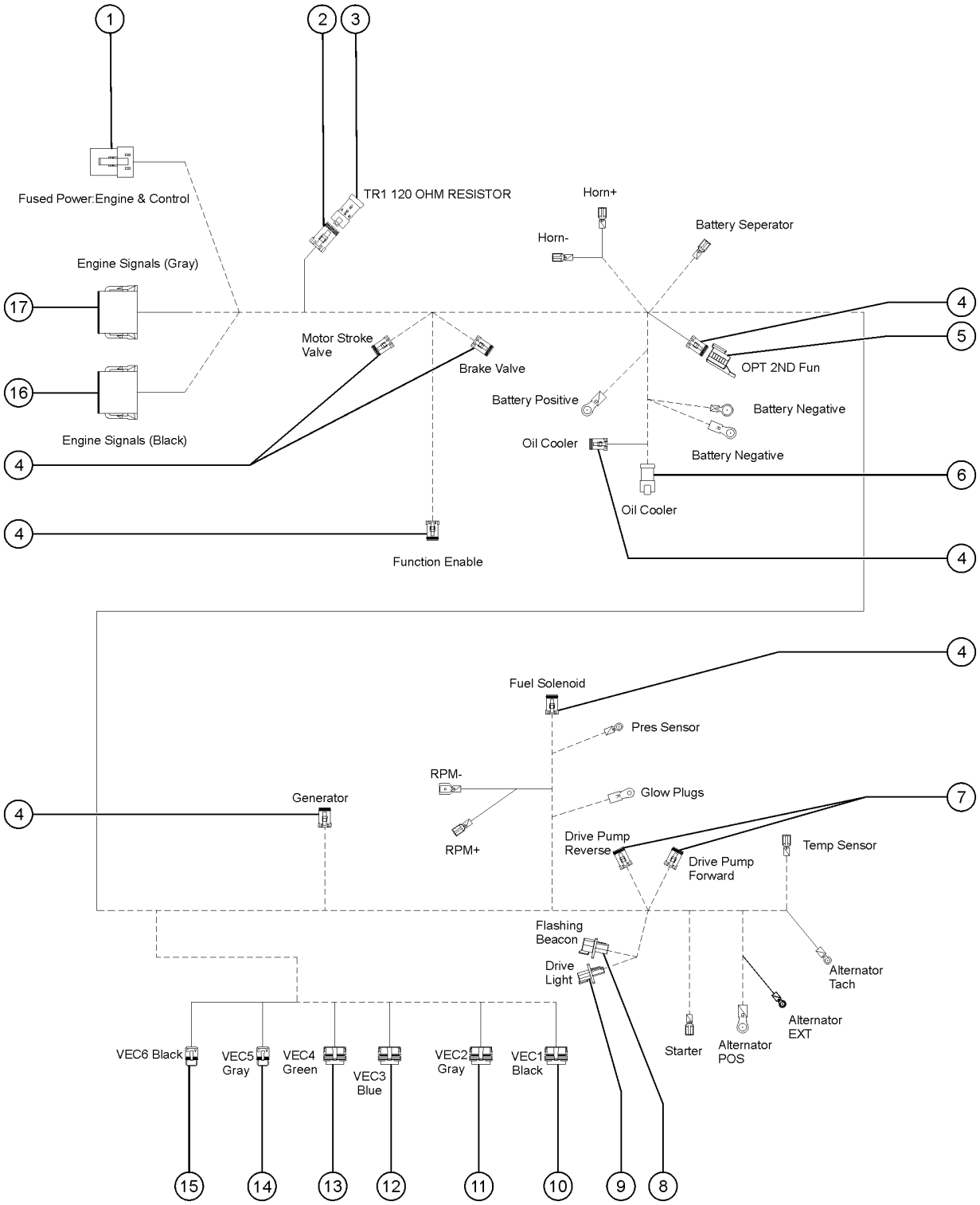

310.118C Harness, Engine, Perkins 404D

Item	Part No.	Description	Qty.
-	1283339GT	HARNESS, ENGINE, PERKINS 404D	1
-	121657GT	FUSE HOLDER,ATC 1-20 AMPS	1
1	60527GT	CONN, PLUG, 4 WAY, DEUTSCH, DTP	1
1-	60528GT	LOCK,PLUG 4 WAY,12-14GA***	1
2	119057GT	CONN, PLUG, 3 WAY, DEUTSCH, DT, ENDCAP	1
2-	60459GT	LOCK,PLUG 3 WAY,SAE J1939	1
3	60452GT	CONN, RECEP, 3 WAY, DEUTSCH, DT, J1939/120OHM	1
4	119056GT	CONN, PLUG, 2 WAY, DEUTSCH, DT, ENDCAP	10
4-	60425GT	CONN, PLUG, 2 WAY, DEUTSCH, DT, LOCK	9
5	229110GT	CONN, RECEP, 2 WAY, DEUTSCH, DT, CAP	1
6	119065GT	CONN, RECEP, 2 WAY, DEUTSCH, DT	1
6-	60439GT	CONN, RECEP, 2 WAY, DEUTSCH, DT, LOCK	1
7	1279599GT	DIODE,SCHOTTKY 20A,P600	1
7-	60425GT	CONN, PLUG, 2 WAY, DEUTSCH, DT, LOCK	1
8	75629GT	CONN,RECEP 3 WAY,W/FLANGE	1
8-	60441GT	CONN, RECEP, 3 WAY, DEUTSCH, DT, LOCK	1
9	1269704GT	CONNECTOR, RECEP, 2WAY, FL	1
9-	60439GT	CONN, RECEP, 2 WAY, DEUTSCH, DT, LOCK	6
10	822464GT	CONN,8WAY CBT MALE,BLACK	1
10-	822466GT	LOCK,8WAY CBT TP2 SEALED	1
11	822465GT	CONN,8WAY CBT MALE,GRAY	1
11-	822466GT	LOCK,8WAY CBT TP2 SEALED	1
12	822462GT	CONN, PLUG, 8 WAY, EATON, METRI-PACK 150, BLUE	1
12-	822466GT	LOCK,8WAY CBT TP2 SEALED	1
13	822463GT	CONN,8WAY CBT MALE,GREEN	1
13-	822466GT	LOCK,8WAY CBT TP2 SEALED	1
14	822468GT	CONN,2WAY CBT MALE,GRAY	1
14-	822469GT	LOCK,2WAY CBT TP2 SEALED	1

310.118C Harness, Engine, Perkins 404D

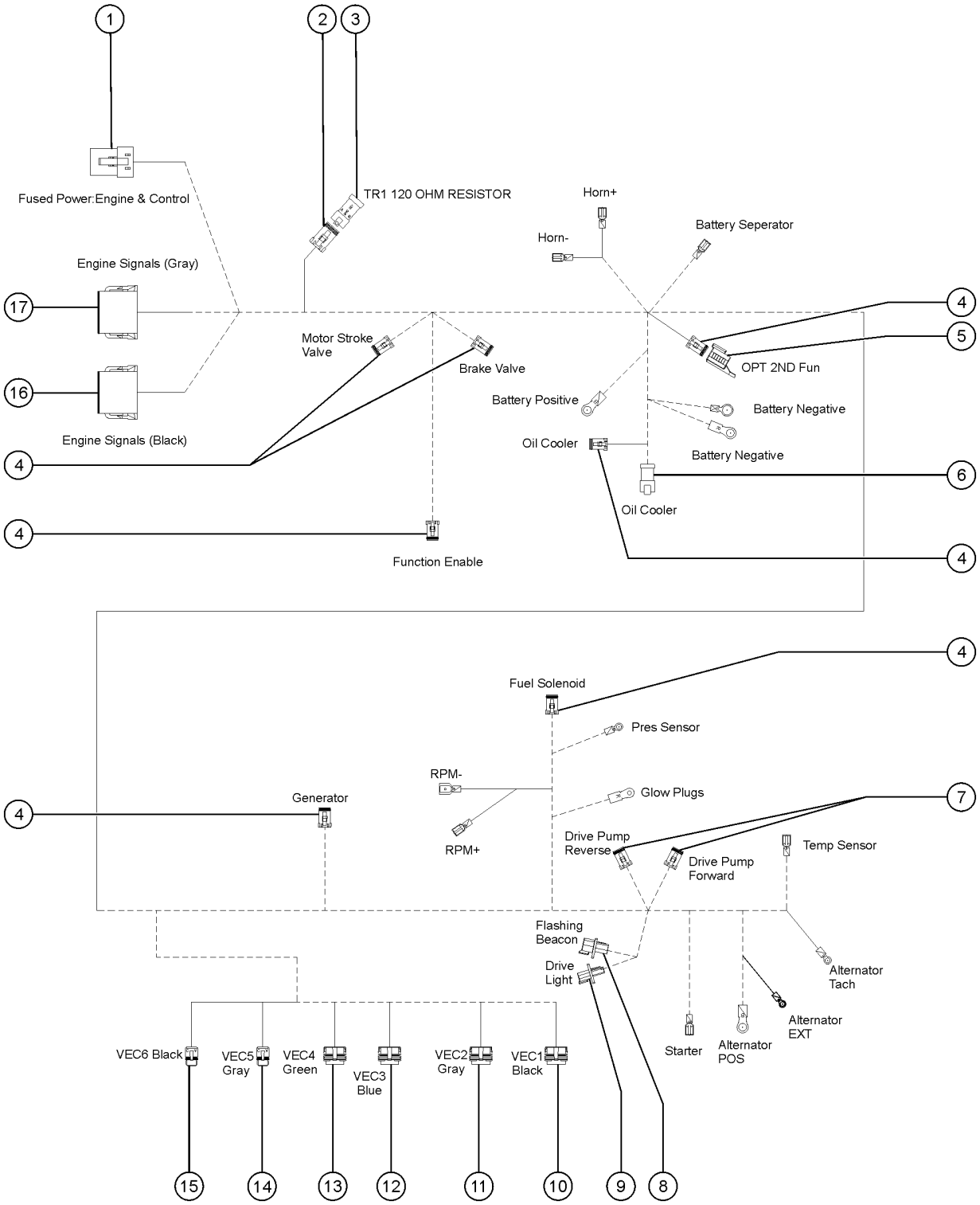

310.118C Harness, Engine, Perkins 404D

Item	Part No.	Description	Qty.
15	822467GT	CONN,2WAY CBT MALE,BLACK	1
15-	822469GT	LOCK,2WAY CBT TP2 SEALED	1
16	119062GT	CONN, PLUG, 12 WAY, DEUTSCH, DT, BLACK	1
16-	60528GT	LOCK,PLUG 4 WAY,12-14GA***	1
17	119061GT	CONN, PLUG, 12 WAY, DEUTSCH, DT, GRAY	1
17-	60528GT	LOCK,PLUG 4 WAY,12-14GA***	1

310.118D Harness, Engine, Perkins CRDI

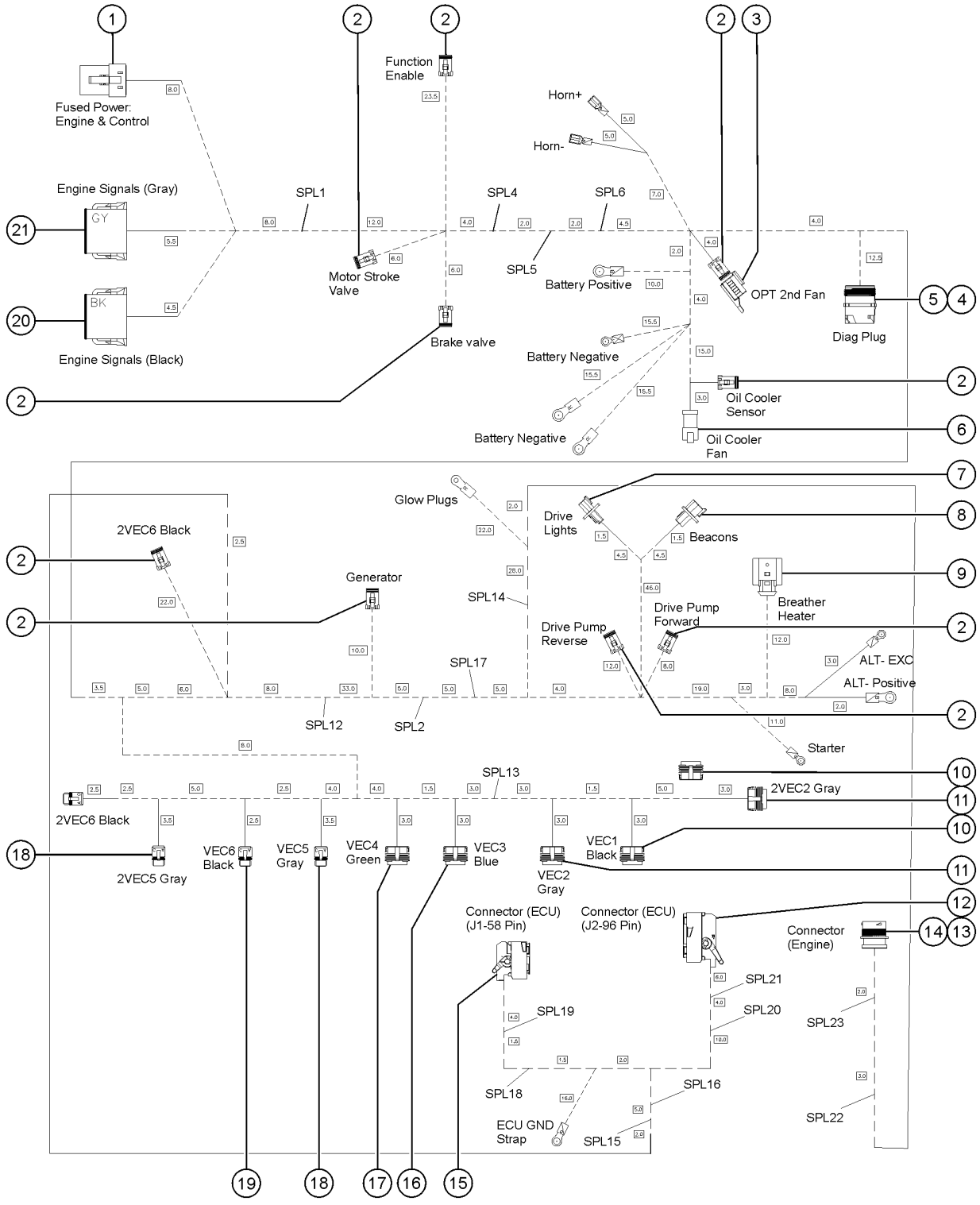

310.118D Harness, Engine, Perkins CRDI

Item	Part No.	Description	Qty.
-	1283340GT	HARNESS, ENGINE, PERKINS 404F	1
1	60527GT	CONN, PLUG, 4 WAY, DEUTSCH, DTP	1
1-	60528GT	LOCK,PLUG 4 WAY,12-14GA***	1
2	119056GT	CONN, PLUG, 2 WAY, DEUTSCH, DT, ENDCAP	9
2-	60425GT	CONN, PLUG, 2 WAY, DEUTSCH, DT, LOCK	9
3	229110GT	CONN, RECEP, 2 WAY, DEUTSCH, DT, CAP	1
4	823053GT	CONN,DUST CAP,RECEP,9-WAY GRAY	1
5	823052GT	CONN,RECEP 9-WAY,FL. GRAY	1
6	119065GT	CONN, RECEP, 2 WAY, DEUTSCH, DT	1
6-	60439GT	CONN, RECEP, 2 WAY, DEUTSCH, DT, LOCK	1
7	1269704GT	CONNECTOR, RECEP, 2WAY, FL	1
7-	60439GT	CONN, RECEP, 2 WAY, DEUTSCH, DT, LOCK	1
8	75629GT	CONN,RECEP 3 WAY,W/FLANGE	1
8-	60441GT	CONN, RECEP, 3 WAY, DEUTSCH, DT, LOCK	1
9	1258096GT	CONN,PLUG,TYCO2.8MM,2-WAY	1
10	822464GT	CONN,8WAY CBT MALE,BLACK	2
10-	822466GT	LOCK,8WAY CBT TP2 SEALED	2
11	822465GT	CONN,8WAY CBT MALE,GRAY	2
11-	822466GT	LOCK,8WAY CBT TP2 SEALED	2
12	1284964GT	CONN, PLUG, 96 WAY	1
12-	1284966GT	LOCK, 1.2MM, TERM POS (96 WAY)	1
13	1284969GT	CONN, PLUG, 47 WAY, EIC	1
14	216388GT	CONN NUT PANEL HDP20 PLASTIC	1
14-	216372GT	LOCKWASHER, RECEP, HDP20	1
15	1284956GT	CONN, PLUG, 58 WAY	1
16	822462GT	CONN, PLUG, 8 WAY, EATON, METRI-PACK 150, BLUE	1
16-	822466GT	LOCK,8WAY CBT TP2 SEALED	1
17	822463GT	CONN,8WAY CBT MALE,GREEN	1

310.118D Harness, Engine, Perkins CRDI

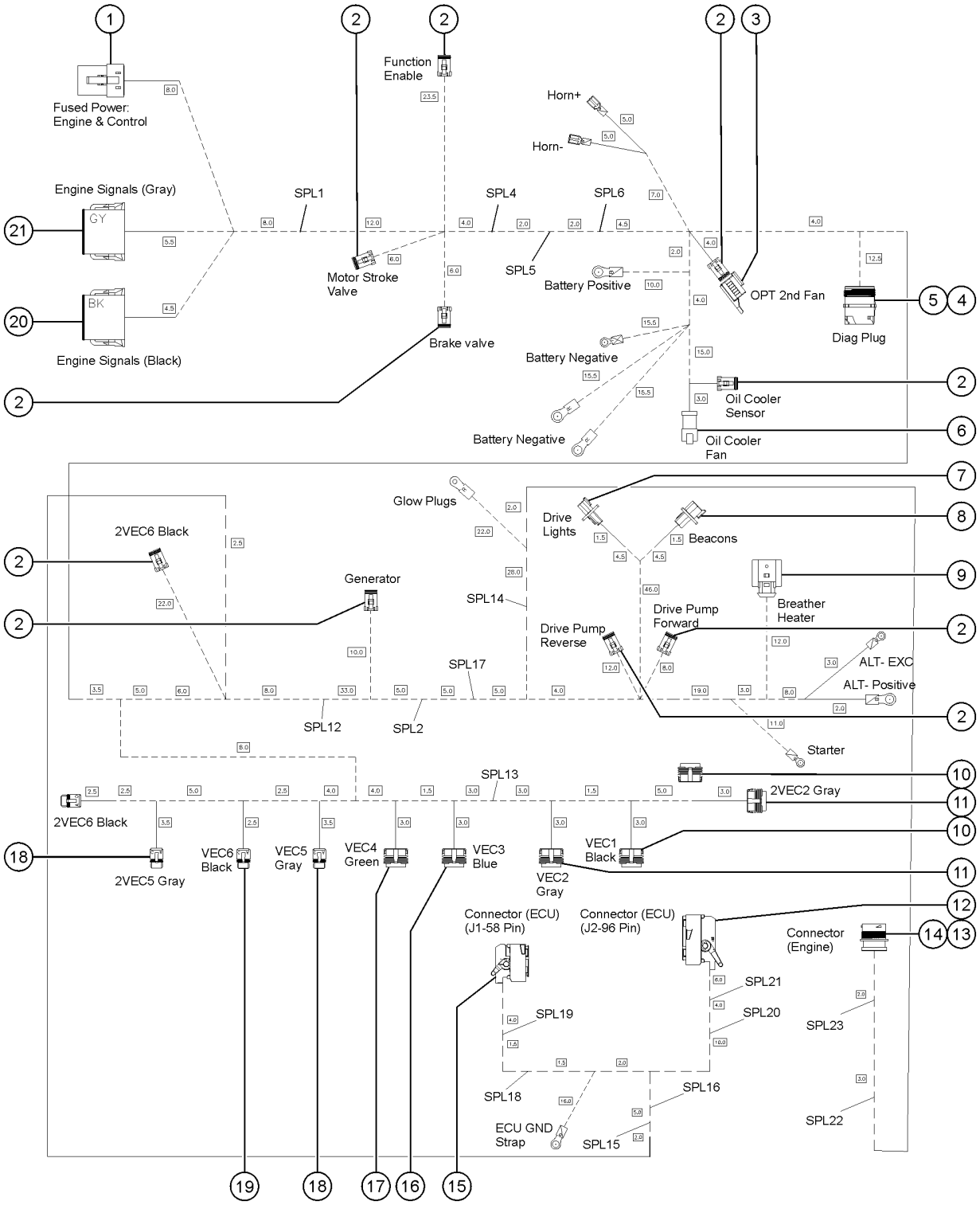

Item	Part No.	Description	Qty.
17-	822466GT	LOCK,8WAY CBT TP2 SEALED	1
18	822468GT	CONN,2WAY CBT MALE,GRAY	1
18-	822469GT	LOCK,2WAY CBT TP2 SEALED	1
19	822467GT	CONN,2WAY CBT MALE,BLACK	1
19-	822469GT	LOCK,2WAY CBT TP2 SEALED	1
20	119062GT	CONN, PLUG, 12 WAY, DEUTSCH, DT, BLACK	1
20-	60435GT	LOCK, PLUG 12WAY, 14-18GA, GRN	1
21	119061GT	CONN, PLUG, 12 WAY, DEUTSCH, DT, GRAY	1
21-	60435GT	LOCK, PLUG 12WAY, 14-18GA, GRN	1

310.119 Harness, Lights, Drive

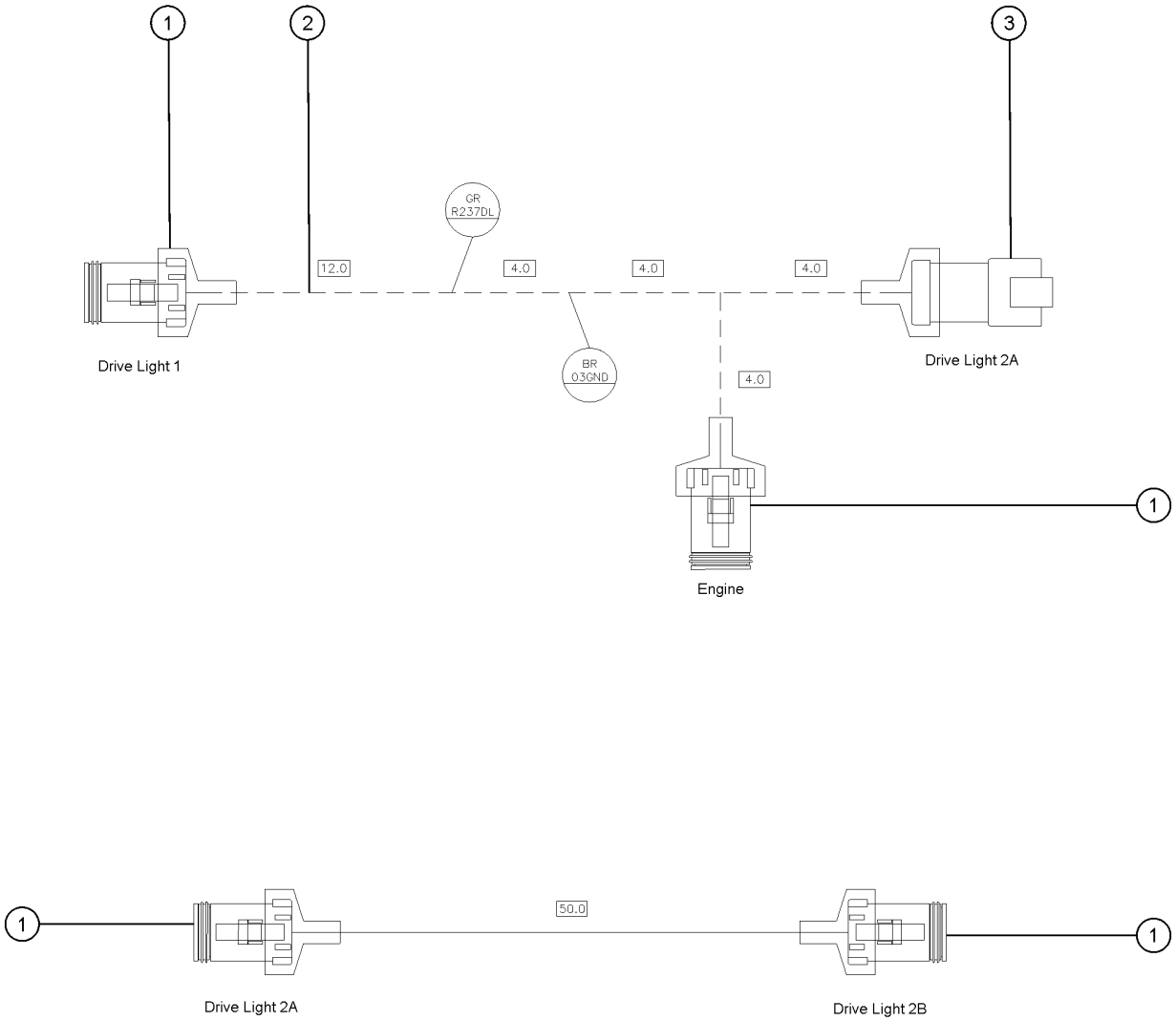

310.119 Harness, Lights, Drive

Item	*Part No.*	*Description*	*Qty.*
-	1269724GT	HARNESS, LIGHTS, DRIVE	1
1	119056GT	CONN, PLUG, 2 WAY, DEUTSCH, DT, ENDCAP	4
1-	60425GT	CONN, PLUG, 2 WAY, DEUTSCH, DT, LOCK	4
2	20973GT	WIRE LOOM,3/8 POLY SLIT	25 Inches
3	119065GT	CONN, RECEP, 2 WAY, DEUTSCH, DT	1
3-	60439GT	CONN, RECEP, 2 WAY, DEUTSCH, DT, LOCK	1

310.120 Harness, Beacons, Flashing

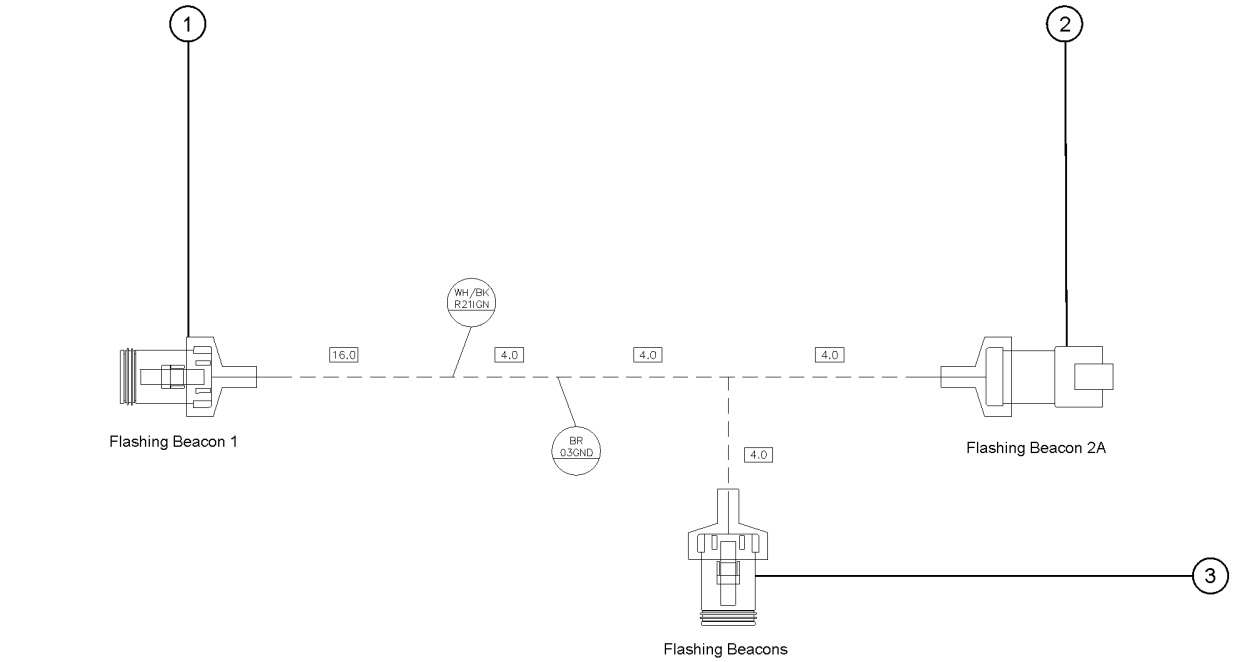



Item	*Part No.*	*Description*	*Qty.*
-	1269729GT	HARNESS,BEACONS,FLASHING	1
1	119056GT	CONN, PLUG, 2 WAY, DEUTSCH, DT, ENDCAP	3
1-	60425GT	CONN, PLUG, 2 WAY, DEUTSCH, DT, LOCK	3
2	119065GT	CONN, RECEP, 2 WAY, DEUTSCH, DT	1
2-	60439GT	CONN, RECEP, 2 WAY, DEUTSCH, DT, LOCK	1
3	119057GT	CONN, PLUG, 3 WAY, DEUTSCH, DT, ENDCAP	1
3-	60427GT	CONN, PLUG, 3 WAY, DEUTSCH, DT, LOCK	1

310.121 Harness, Oil Cooler, Lift Power

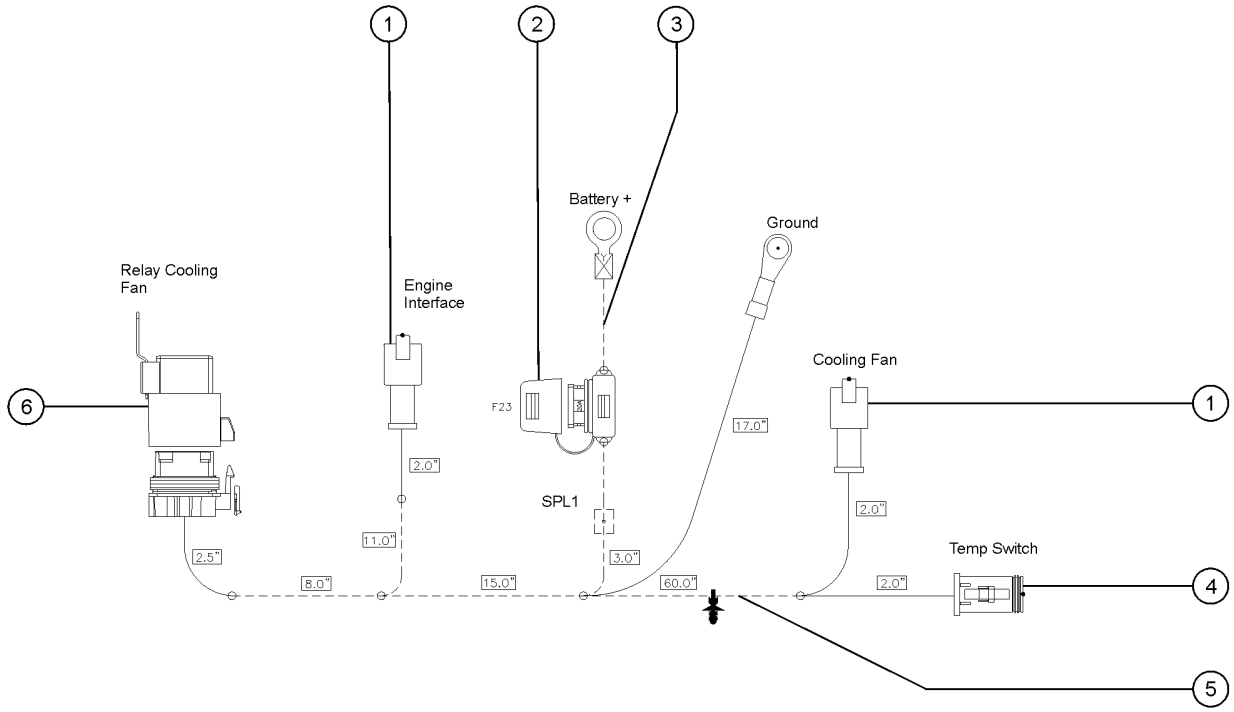

310.121 Harness, Oil Cooler, Lift Power

Item	Part No.	Description	Qty.
-	1283555GT	HARNESS,OIL COOLER,LIFTPOWER	1
1	119065GT	CONN, RECEP, 2 WAY, DEUTSCH, DT	2
1-	60439GT	CONN, RECEP, 2 WAY, DEUTSCH, DT, LOCK	2
2	79015GT	FUSE,20 AMP,ATC	1
2-	67504GT	FUSE HOLDER,ATC 3-30 AMPS	1
3	99087GT	WIRE LOOM,1/4 DIA. SLIT	18 Inches
4	119056GT	CONN, PLUG, 2 WAY, DEUTSCH, DT, ENDCAP	1
4-	60425GT	CONN, PLUG, 2 WAY, DEUTSCH, DT, LOCK	1
5	20973GT	WIRE LOOM,3/8 POLY SLIT	83 Inches
6	60521GT	RELAY,SEALED 30/40 AMP	1
6-	1261815GT	SOCKET,SEALED RELAY,4WAY BLUE	1

310.122 Harness, Batt2 To APU(+)

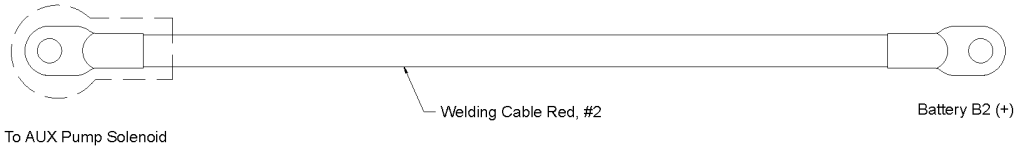

310.122 Harness, Batt2 To APU(+)

Item	Part No.	Description	Qty.
-	121619GT	HARNESS,BATT2 TO APU(+),S80	1

310.123 Harness, Batt2 To APU(-)

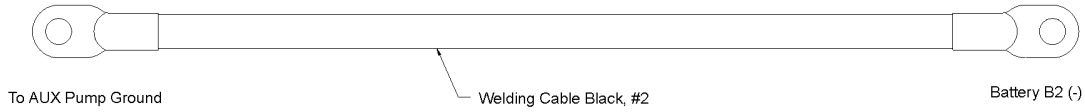

310.123 Harness, Batt2 To APU(-)

Item	Part No.	Description	Qty.
-	121622GT	HARNESS,BATT2 TO APU(-),S80	1

310.124 Cable, Battery, NEG, S60/65

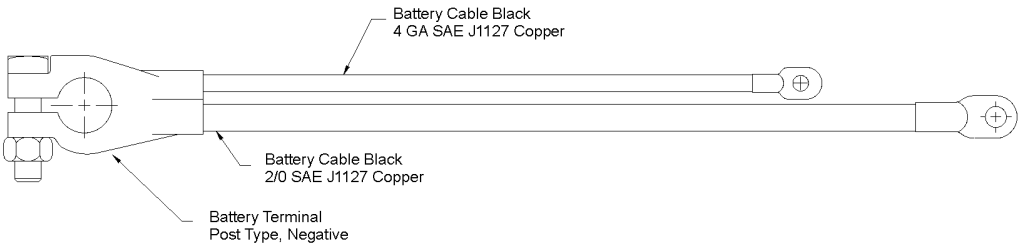

Item	Part No.	Description	Qty.
-	1291410GT	CABLE, BATTERY, NEG, S60/65	1

310.124A Cable, Jumper, Ground, ENG



Item	Part No.	Description	Qty.
-	1291411GT	CABLE, JUMPER, GROUND, ENG	1

310.125 Battery Cable, Positive, RED

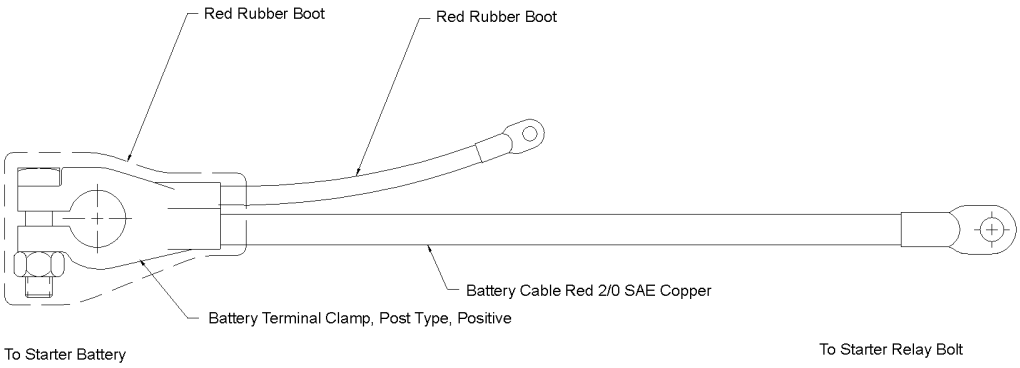

Item	*Part No.*	*Description*	*Qty.*
-	88801GT	BATTERY CABLE,POSITIVE,RED	1

310.126 Harness, AC Power To Plat Jib

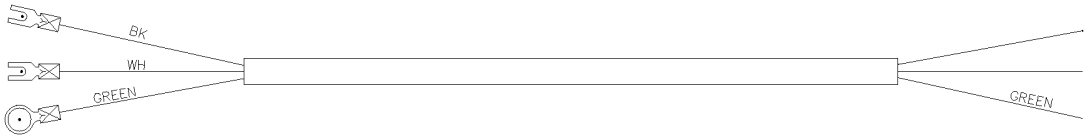

Item	Part No.	Description	Qty.
-	139731GT	HARNESS,AC POWER TO PLAT JIB	1

130.128 Harness, GND BATT 1 to BATT2



130.128 Harness, GND BATT 1 to BATT2

Item	*Part No.*	*Description*	*Qty.*
-	106555GT	HARNESS,GND BATT 1 TO BATT 2	1

310.129 Harness 16GA Separator to GRD



310.129 Harness 16GA Separator to GRD

Item	*Part No.*	*Description*	*Qty.*
-	88831GT	HARNESS,16 GA SEPERATOR TO GRD	1

310.130 Harness, GA BATT to Separatr



Item	Part No.	Description	Qty.
-	106554GT	HARNESS,8GA BATT 2 TO SEPARATR	1

310.131 Harness, APU + to BATT2

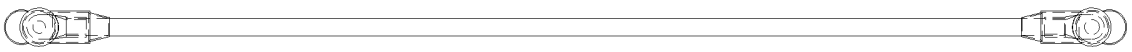

310.131 Harness, APU + to BATT2

Item	*Part No.*	*Description*	*Qty.*
-	88804GT	HARNESS,APU+ TO BATT 2	1

310.132 Cable, Red 2/0, 20"

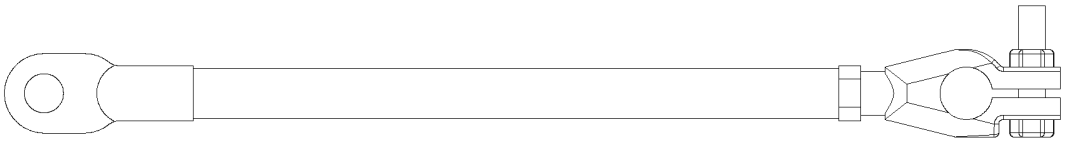

310.132 Cable, Red 2/0, 20"

Item	Part No.	Description	Qty.
-	1269060GT	CABLE, RED 2/0, 20"	1
-	101681GT	BOOT,BATTERY CABLE TERM,LG RED	

310.133 Cable ASSY, Red 2/0



310.133 Cable ASSY, Red 2/0

Item	Part No.	Description	Qty.
-	1269051GT	CABLE ASSY, RED 2/0	1

310.134 Cable ASSY, Black 2/0

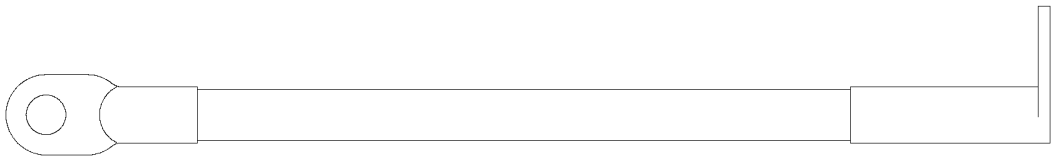

310.134 Cable ASSY, Black 2/0

Item	*Part No.*	*Description*	*Qty.*
-	1269061GT	CABLE ASSY, BLACK 2/0	1

401.1 Function Manifold, to SN S60XCH-45344

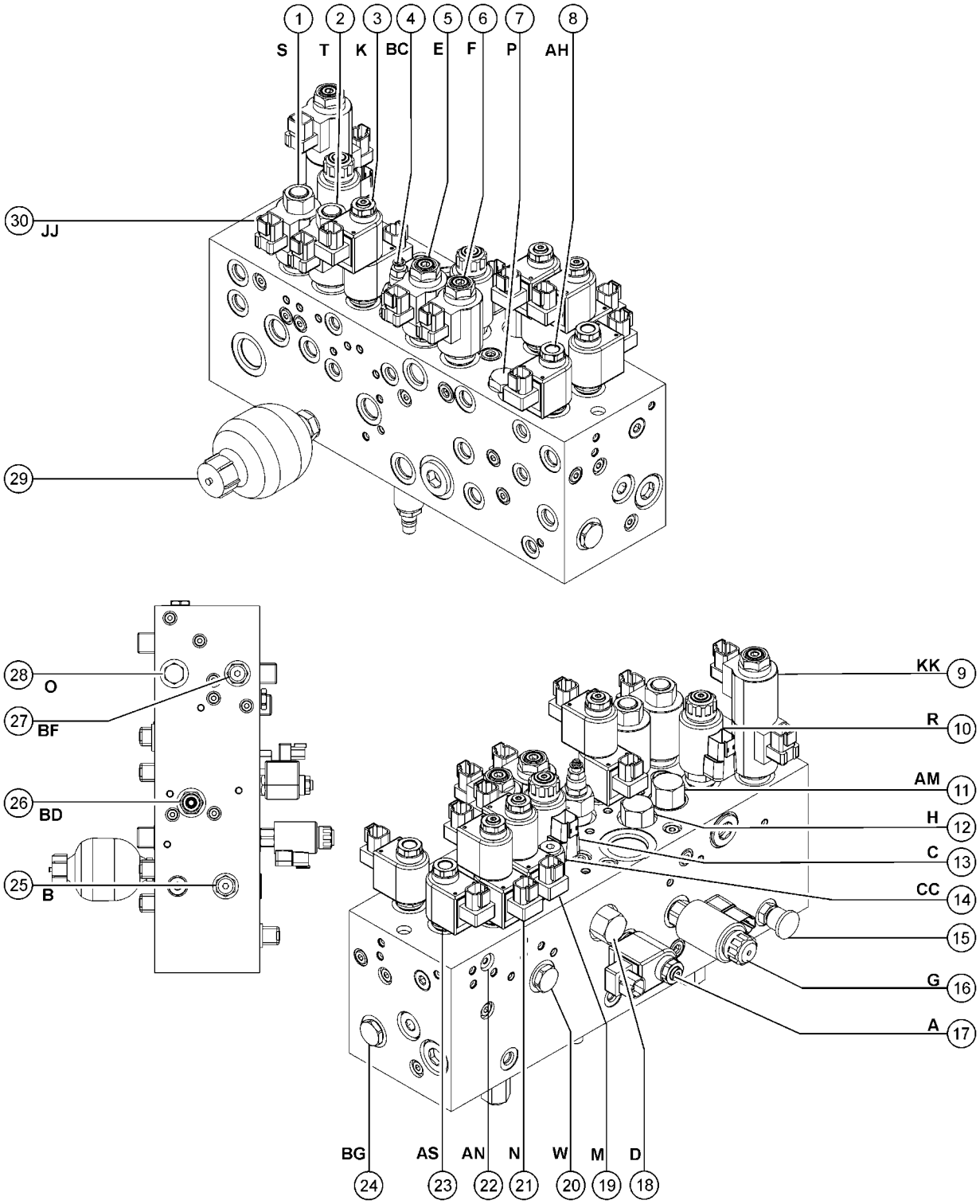

401.1 Function Manifold, to SN S60XCH-45344

Item	Part No.	Description	Qty.
A-	1287485GT	MANIFOLD, FUNCTION, S60/S65 XC (Complete)	
B-	28750GT	O-RING KIT,FIELD SVC,ALL PROD*	
C-	49612GT	O-RING KIT (ORFS FITTINGS)	
D-	33994GT	PLUG AND CAP KIT-SERVICE,37?**	
E-	49613GT	PLUG AND CAP KIT-SERVICE,ORFS*	
F-	1278863GT	HARNESS S60/65XC FUNCTION, MANIFOLD (refer to 310.1)	
1	231034GT	SOLENOID VALVE,3-WAY,2-POS S, Boom up	1
1-	237234GT	SEAL KIT,VALVE	
1-	111778GT	COIL,10V DC(D10,26 WATT)	
1-	119116GT	NUT,COIL (107745)	
2	231034GT	SOLENOID VALVE,3-WAY,2-POS T, Boom down	1
2-	237234GT	SEAL KIT,VALVE	
2-	111778GT	COIL,10V DC(D10,26 WATT)	
2-	119116GT	NUT,COIL (107745)	
3	122645GT	SOLENOID VALVE,SPOOL TYPE K, Turntable rotate	1
3-	122120GT	SEAL KIT, SOLENOID VALVE	
3-	89733GT	COIL SOLENOID VALVE***	
3-	102940GT	NUT,SOLENOID VALVE	
4	1288381GT	VALVE, RELIEVING BC, Oscillate pressure control	1
5	122649GT	VALVE,SOLENOID,NO,POPPET E, Boom retract	1
5-	1274870GT	SEAL KIT, VALVE	
5-	111778GT	COIL,10V DC(D10,26 WATT)	
5-	119116GT	NUT,COIL (107745)	
6	122649GT	VALVE,SOLENOID,NO,POPPET F, Boom Extend	1
6-	1274870GT	SEAL KIT, VALVE	
6-	111778GT	COIL,10V DC(D10,26 WATT)	
6-	119116GT	NUT,COIL (107745)	
7	161538GT	VALVE, CHECK, 65 PSI P, Platfrom level pilot check	1

401.1 Function Manifold, to SN S60XCH-45344

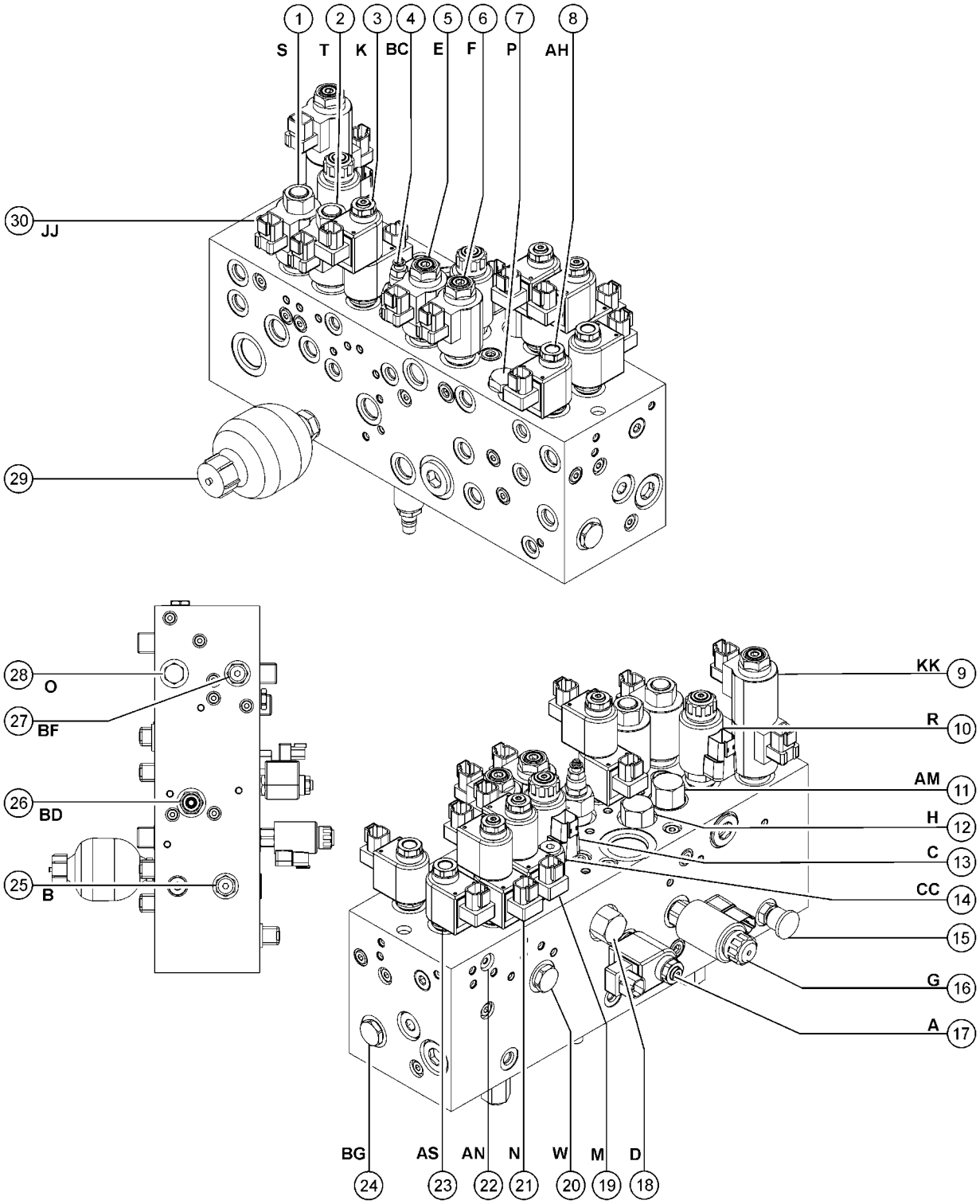

401.1 Function Manifold, to SN S60XCH-45344

Item	Part No.	Description	Qty.
7-	74902GT	SEAL KIT, VALVE	
8	1288377GT	SOLENOID VALVE,3-WAY,2-POS (AH, Two-speed motor shift), (replaced by 1290553GT)	1
8B	1290553GT	VALVE, SOLENOID, 2POS 3WAY	1
9	122647GT	SOLENOID VALVE SPOOL TYPE KK, Steering directional	1
9-	122657GT	SEAL KIT	
9-	111778GT	COIL,10V DC(D10,26 WATT)	
9-	119115GT	NUT, COIL (107746)	
10	1290561GT	VALVE, PROPRTIONAL, FLOW CONTROL R, Boom up/down proportional	1
10-	89737GT	COIL, PROPORTIONAL VALVE***	
11	27802GT	VALVE,DIFFERENTIAL SENSING*** AM, Primary lift	1
11-	110197GT	SEAL KIT, VALVE, #10	
12	94599GT	VALVE,DIFFERENTIAL SENSING,110 H, Pressure compensation turntable rotate	1
12-	110197GT	SEAL KIT, VALVE, #10	
13	1288379GT	PROPORTIONAL VALVE C, Boom extend proportional	1
13-	89737GT	COIL, PROPORTIONAL VALVE***	
14	33998GT	VALVE,RELIEF*** CC, Boom extend relief	
14-	74902GT	SEAL KIT, VALVE	
15	48998GT	NIPPLE,DIAGNOSTIC,#6 PORT***	1
16	102528GT	VALVE,PROPORTIONAL G, Turntable proportional	1
16-	89312GT	SEAL KIT, SOLENOID VALVE	
16-	89737GT	COIL, PROPORTIONAL VALVE***	
17	161533GT	VALVE, SOLENOID, 2 POS 2 WAY A, Differental sensing, turntable rotate	1
17-	89733GT	COIL SOLENOID VALVE***	
17-	89770GT	SEAL KIT, SOLENOID VALVE	
18	1288380GT	VALVE,DIFFERENTIAL SENSING D, Boom extend	1
19	1288376GT	SOLENOID VALVE,4-WAY,3 POS M, Pltaform rotate CW/CCW	1
20	1260116GT	VALVE, CHECK, 30 PSI W. Platform rotate tank line	1
20-	74902GT	SEAL KIT, VALVE	

401.1 Function Manifold, to SN S60XCH-45344

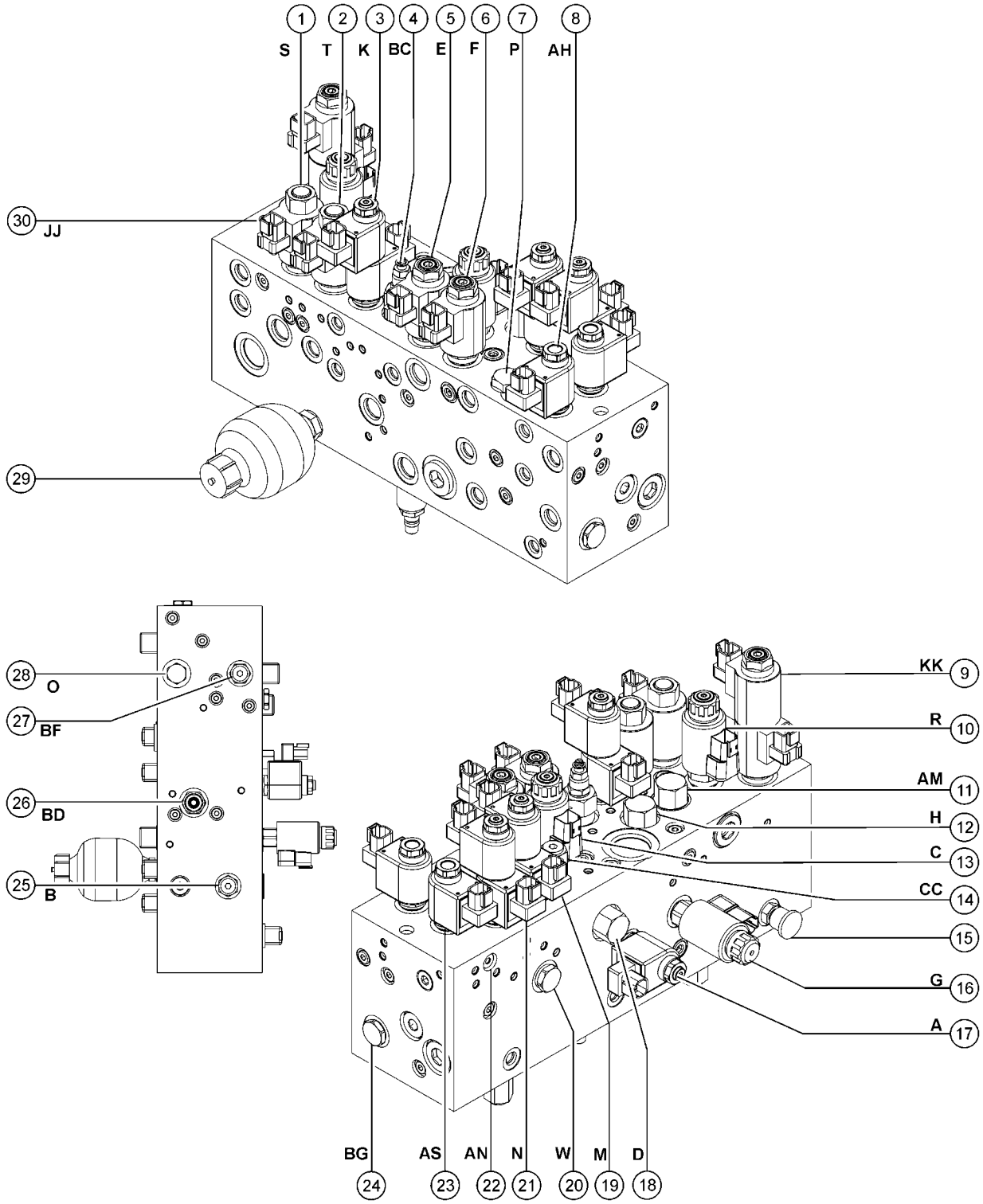

401.1 Function Manifold, to SN S60XCH-45344

Item	Part No.	Description	Qty.
21	1288376GT	SOLENOID VALVE,4-WAY,3 POS N, Platfrom level up/down	1
22	27807GT	VALVE,CHECK*** AN, Brake release circuit	
23	1288377GT	SOLENOID VALVE,3-WAY,2-POS (AS, Brake release), (replaced by 1290553GT)	1
23B	1290553GT	VALVE, SOLENOID, 2POS 3WAY	1
24	1288375GT	VALVE, LOAD SHUTTLE BG, Shuttle port relief	1
24-	58994GT	SEAL KIT,VALVE (48647)	
25	52715GT	VALVE,RELIEF 3200 PSI B, System relief	1
25-	74902GT	SEAL KIT, VALVE	
26	1288382GT	VALVE, PILOT OPERATED BD, Sequence valve on oscillate circuit	1
27	1288378GT	VALVE,RELIEF,3500 PSI BF, Platfrom level	1
27-	74902GT	SEAL KIT, VALVE	
28	161538GT	VALVE, CHECK, 65 PSI O, Platform level pilot check	1
28-	74902GT	SEAL KIT, VALVE	
29	94499GT	ACCUMULATOR,10CC,1000PSI,#6SAE	1
30	122641GT	VALVE,FLOW REGULATOR JJ, Steering flow control	1
30-	74902GT	SEAL KIT, VALVE	

401.2 Function Manifold, from SN S60XCH-45345

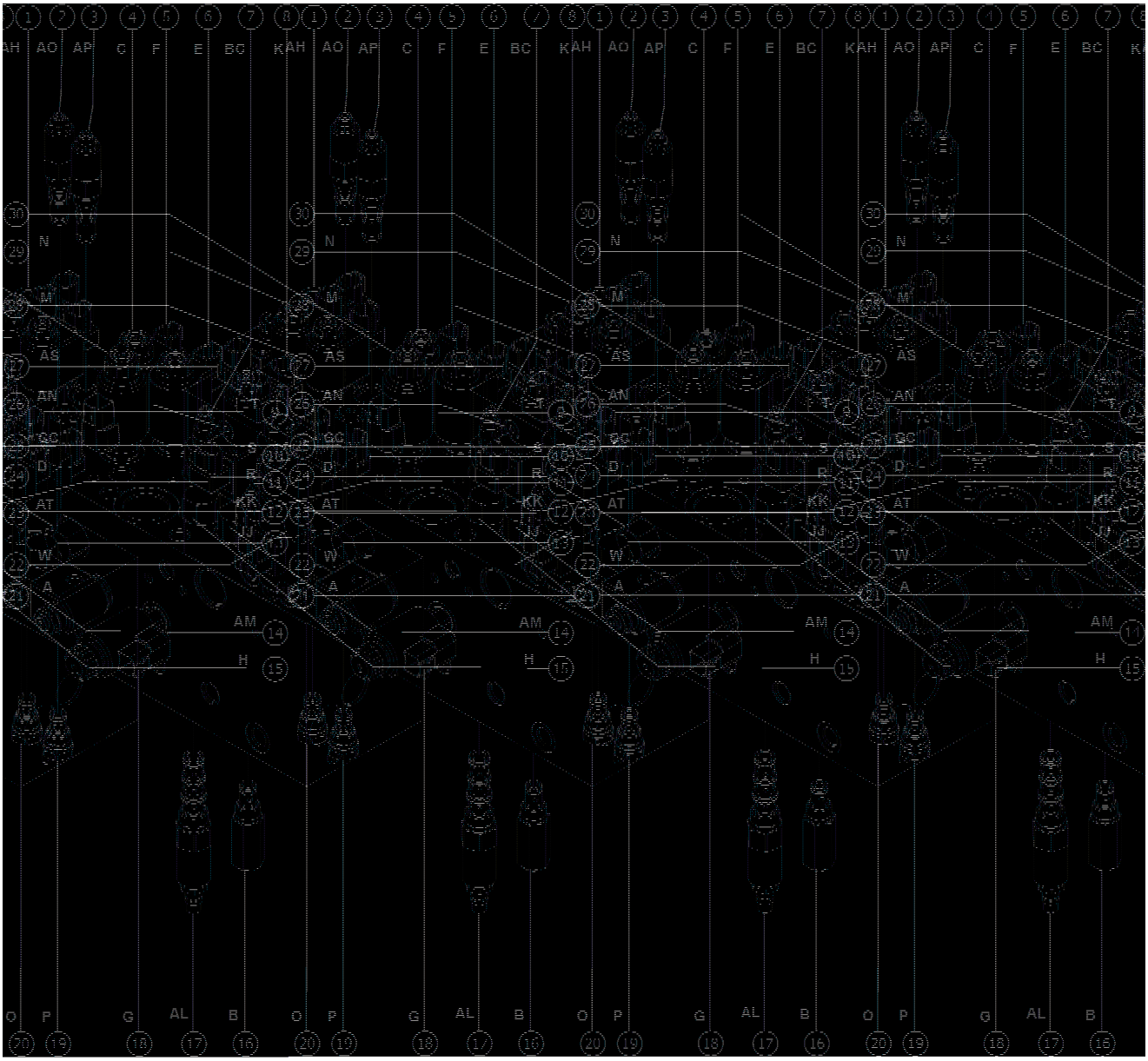

401.2 Function Manifold, from SN S60XCH-45345

Item	Part No.	Description	Qty.
A-	1288400GT	MANIFOLD, FUNCTION, S60/65XC; E.58 H15 (complete)	1
B-	94499GT	ACCUMULATOR,10CC,1000PSI,#6SAE (not shown)	1
1	1288377GT	SOLENOID VALVE,3-WAY,2-POS (AH, Two-speed motor shift), (replaced by 1290553GT)	1
1B	1290553GT	VALVE, SOLENOID, 2POS 3WAY	1
2	48647GT	VALVE,COUNTERBALANCE,3500 PSI* AO, Platform level up circuit	1
2-	58994GT	SEAL KIT,VALVE (48647)	
3	48647GT	VALVE,COUNTERBALANCE,3500 PSI* AP, Platform level down circuit	1
3-	58994GT	SEAL KIT,VALVE (48647)	
4	1288379GT	PROPORTIONAL VALVE C, Boom extend proportional	1
4-	89737GT	COIL, PROPORTIONAL VALVE***	
5	122649GT	VALVE,SOLENOID,NO,POPPET F, Boom Extend	1
5-	1274870GT	SEAL KIT, VALVE	
5-	111778GT	COIL,10V DC(D10,26 WATT)	
5-	119116GT	NUT,COIL (107745)	
6	122649GT	VALVE,SOLENOID,NO,POPPET E, Boom retract	1
6-	1274870GT	SEAL KIT, VALVE	
6-	111778GT	COIL,10V DC(D10,26 WATT)	
6-	119116GT	NUT,COIL (107745)	
7	1288381GT	VALVE, RELIEVING BC, Oscillate pressure control	1
8	122645GT	SOLENOID VALVE,SPOOL TYPE K, Turntable rotate	1
8-	122120GT	SEAL KIT, SOLENOID VALVE	
8-	89733GT	COIL SOLENOID VALVE***	
8-	102940GT	NUT,SOLENOID VALVE	
9	231034GT	SOLENOID VALVE,3-WAY,2-POS T, Boom down	1
9-	237234GT	SEAL KIT,VALVE	
9-	111778GT	COIL,10V DC(D10,26 WATT)	
9-	119116GT	NUT,COIL (107745)	
10	231034GT	SOLENOID VALVE,3-WAY,2-POS S, Boom up	1

401.2 Function Manifold, from SN S60XCH-45345

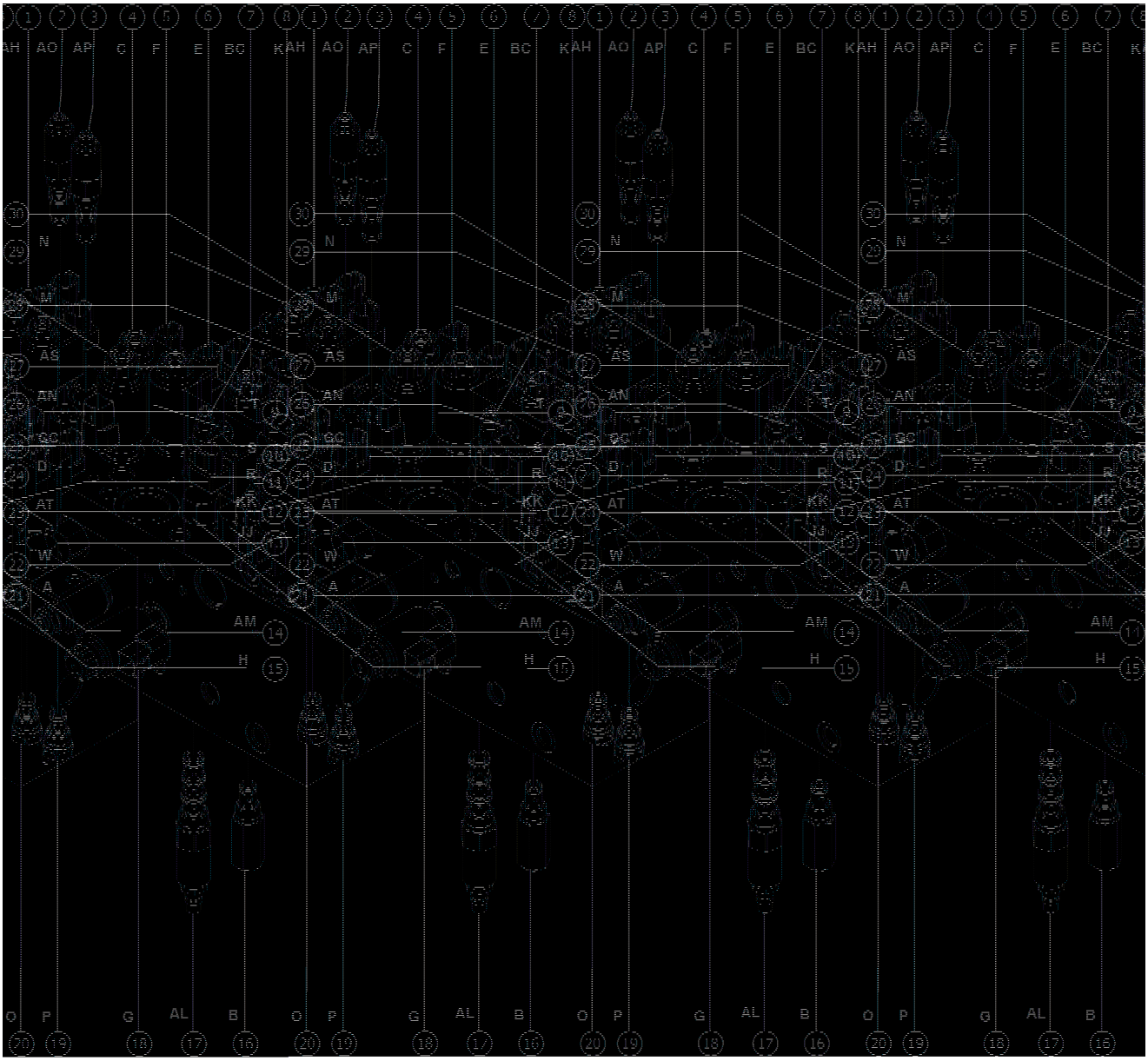

401.2 Function Manifold, from SN S60XCH-45345

Item	Part No.	Description	Qty.
10-	237234GT	SEAL KIT,VALVE	
10-	111778GT	COIL,10V DC(D10,26 WATT)	
10-	119116GT	NUT,COIL (107745)	
11	1290561GT	VALVE, PROPRTIONAL, FLOW CONTROL R, Boom up/down proportional	1
11-	89737GT	COIL, PROPORTIONAL VALVE***	
12	122647GT	SOLENOID VALVE SPOOL TYPE KK, Steering directional	1
12-	122657GT	SEAL KIT	
12-	111778GT	COIL,10V DC(D10,26 WATT)	
12-	119115GT	NUT, COIL (107746)	
13	122641GT	VALVE,FLOW REGULATOR JJ, Steering flow control	1
13-	74902GT	SEAL KIT, VALVE	
14	27802GT	VALVE,DIFFERENTIAL SENSING*** AM, Primary lift	1
14-	110197GT	SEAL KIT, VALVE, #10	
15	94599GT	VALVE,DIFFERENTIAL SENSING,110 H, Turntable rotate	1
15-	110197GT	SEAL KIT, VALVE, #10	
16	52715GT	VALVE,RELIEF 3200 PSI B, System relief	1
16-	74902GT	SEAL KIT, VALVE	
17	1288382GT	VALVE, PILOT OPERATED AL, Oscillate control circuit	1
18	102528GT	VALVE,PROPORTIONAL G, Turntable proportional	1
18-	89312GT	SEAL KIT, SOLENOID VALVE	
18-	89737GT	COIL, PROPORTIONAL VALVE***	
19	1260116GT	VALVE, CHECK, 30 PSI P, Platform level down circuit	1
19-	74902GT	SEAL KIT, VALVE	
20	1260116GT	VALVE, CHECK, 30 PSI O, Platform level up circuit	1
20-	74902GT	SEAL KIT, VALVE	
21	161533GT	VALVE, SOLENOID, 2 POS 2 WAY A, Differental sensing, turntable rotate	1
21-	89733GT	COIL SOLENOID VALVE***	
21-	89770GT	SEAL KIT, SOLENOID VALVE	

401.2 Function Manifold, from SN S60XCH-45345

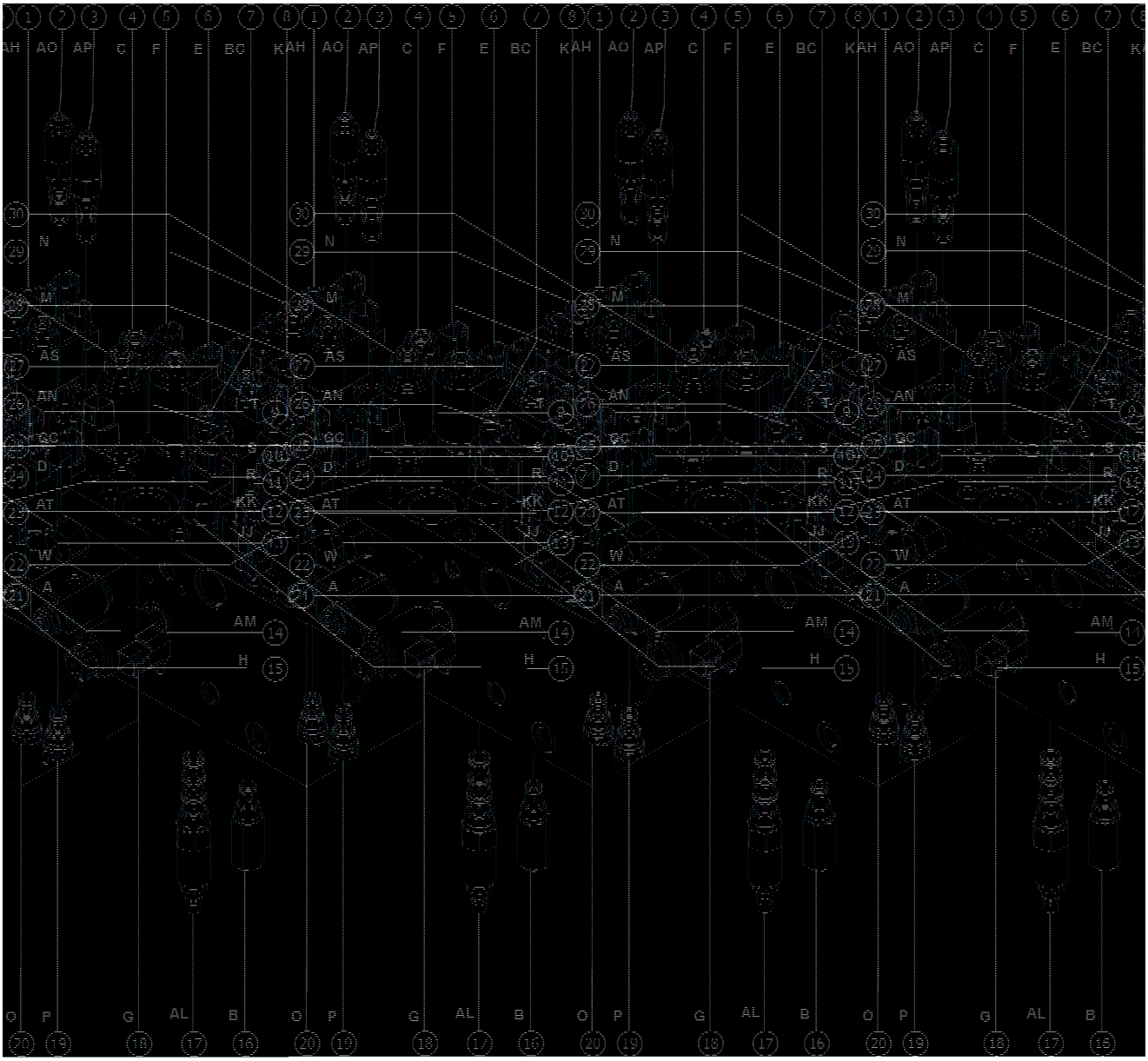

401.2 Function Manifold, from SN S60XCH-45345

Item	Part No.	Description	Qty.
22	1260116GT	VALVE, CHECK, 30 PSI W, Platform rotate tank line	1
22-	74902GT	SEAL KIT, VALVE	
23	1260116GT	VALVE, CHECK, 30 PSI AT, Platform level circuit	1
23-	74902GT	SEAL KIT, VALVE	
24	1288380GT	VALVE,DIFFERENTIAL SENSING D, Boom extend	1
25	33998GT	VALVE,RELIEF*** CC, Boom extend relief	
25-	74902GT	SEAL KIT, VALVE	
26	27807GT	VALVE,CHECK*** AN, Brake release circuit	1
27	1288377GT	SOLENOID VALVE,3-WAY,2-POS AS, Brake release, (replaced by 1290553GT)	1
27B	1290553GT	VALVE, SOLENOID, 2POS 3WAY	1
28	1288376GT	SOLENOID VALVE,4-WAY,3 POS M, Pltaform rotate CW/CCW	1
29	1288376GT	SOLENOID VALVE,4-WAY,3 POS N, Platfrom level up/down	1
30	1288379GT	PROPORTIONAL VALVE	1
30-	89737GT	COIL, PROPORTIONAL VALVE***	

402.1 Traction Manifold

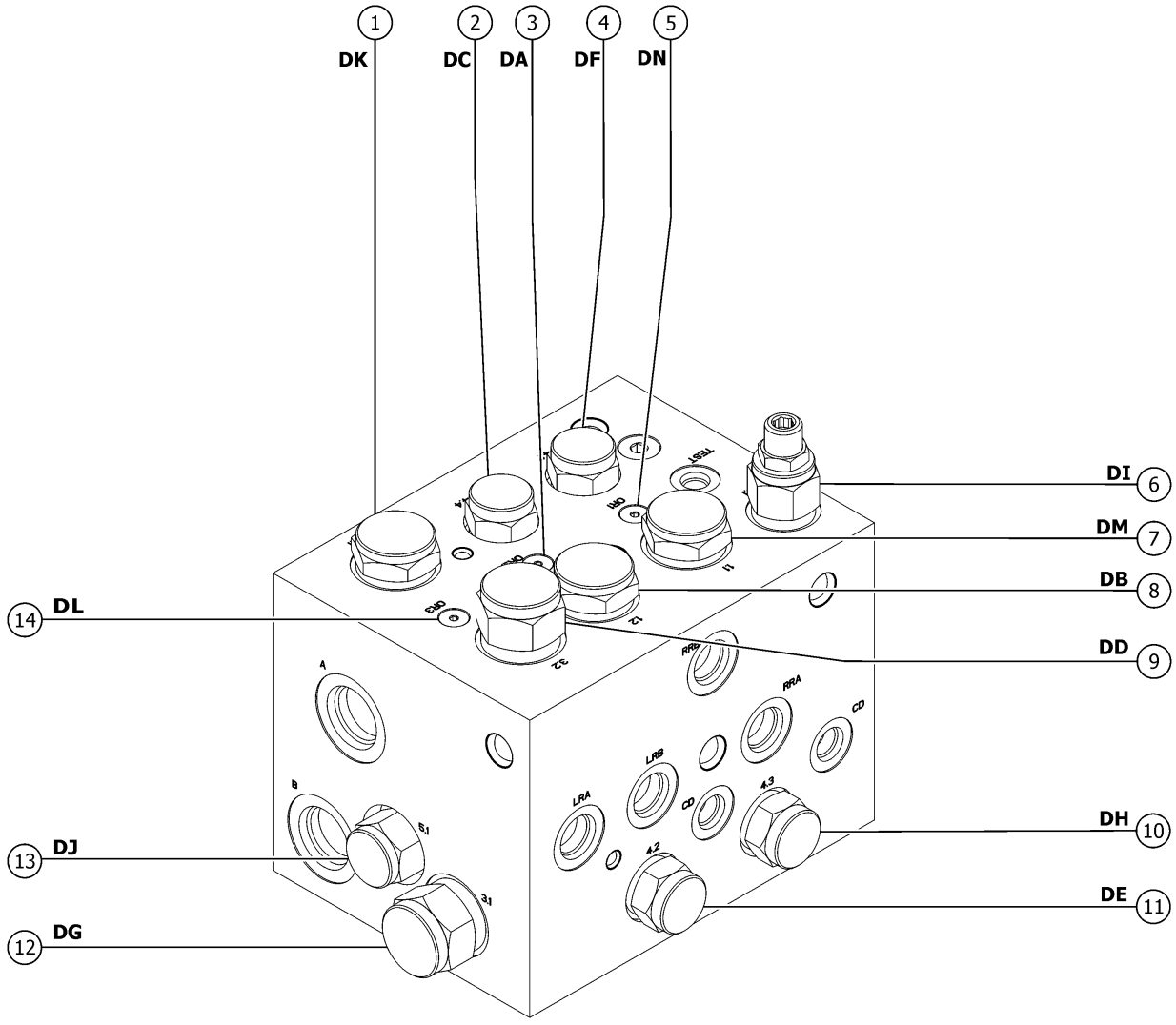

Item	Part No.	Description	Qty.
A	1276750GT	MANIFOLD, TRACTION, 4WD	
A-	1314493GT	PLUG, ORIFICE, .040 ID (1276750)	
B	28750GT	O-RING KIT,FIELD SVC,ALL PROD*	
C	49612GT	O-RING KIT (ORFS FITTINGS)	
D	33994GT	PLUG AND CAP KIT-SERVICE,37?**	
E	49613GT	PLUG AND CAP KIT-SERVICE,ORFS*	
1	139508GT	VALVE, FLOW DIVIDE/COMBINE 1:1 DK, Divides flow between diagonal pairs of motors	1
1-	139512GT	SEAL KIT, VALVE	
2	139527GT	VALVE, CHECK, 5PSI DC, Prevents cavitation in LF motor	1
2-	139515GT	SEAL KIT, VALVE	
3	139719GT	ORIFICE, 0.040" DA, Prevents scrub at high steer angles by allowing some bypass flow around the left flow divider	1
4	139527GT	VALVE, CHECK, 5PSI DF, Prevent cavitation in RF motor	1
4-	139515GT	SEAL KIT, VALVE	
5	139719GT	ORIFICE, 0.040" DN, Prevents scrub at high steer angles by allowing some bypass flow around the right flow divider	1
6	139718GT	VALVE, RELIEF, 280PSI DI, Hot oil shuttle relief	1
6-	139528GT	SEAL KIT, VALVE	
7	139717GT	VALVE, FLOW DIVIDE/COMB,24GPM DM, Combines return flow from RF and RR motors	1
7-	139512GT	SEAL KIT, VALVE	
8	139717GT	VALVE, FLOW DIVIDE/COMB,24GPM DB, Combines return flow from LF and LR motors	1
8-	139512GT	SEAL KIT, VALVE	
9	139716GT	VALVE, CHECK DD, Prevent cavitation in LF and RR motors	1
9-	139727GT	SEAL KIT, VALVE	
10	139527GT	VALVE, CHECK, 5PSI DH, Prevent cavitation in RR motor	1
10-	139515GT	SEAL KIT, VALVE	
11	139527GT	VALVE, CHECK, 5PSI DE, Prevent cavitation in LR motor	1
11-	139515GT	SEAL KIT, VALVE	
12	139716GT	VALVE, CHECK DG, Prevent cavitation in RF and LR motors	1

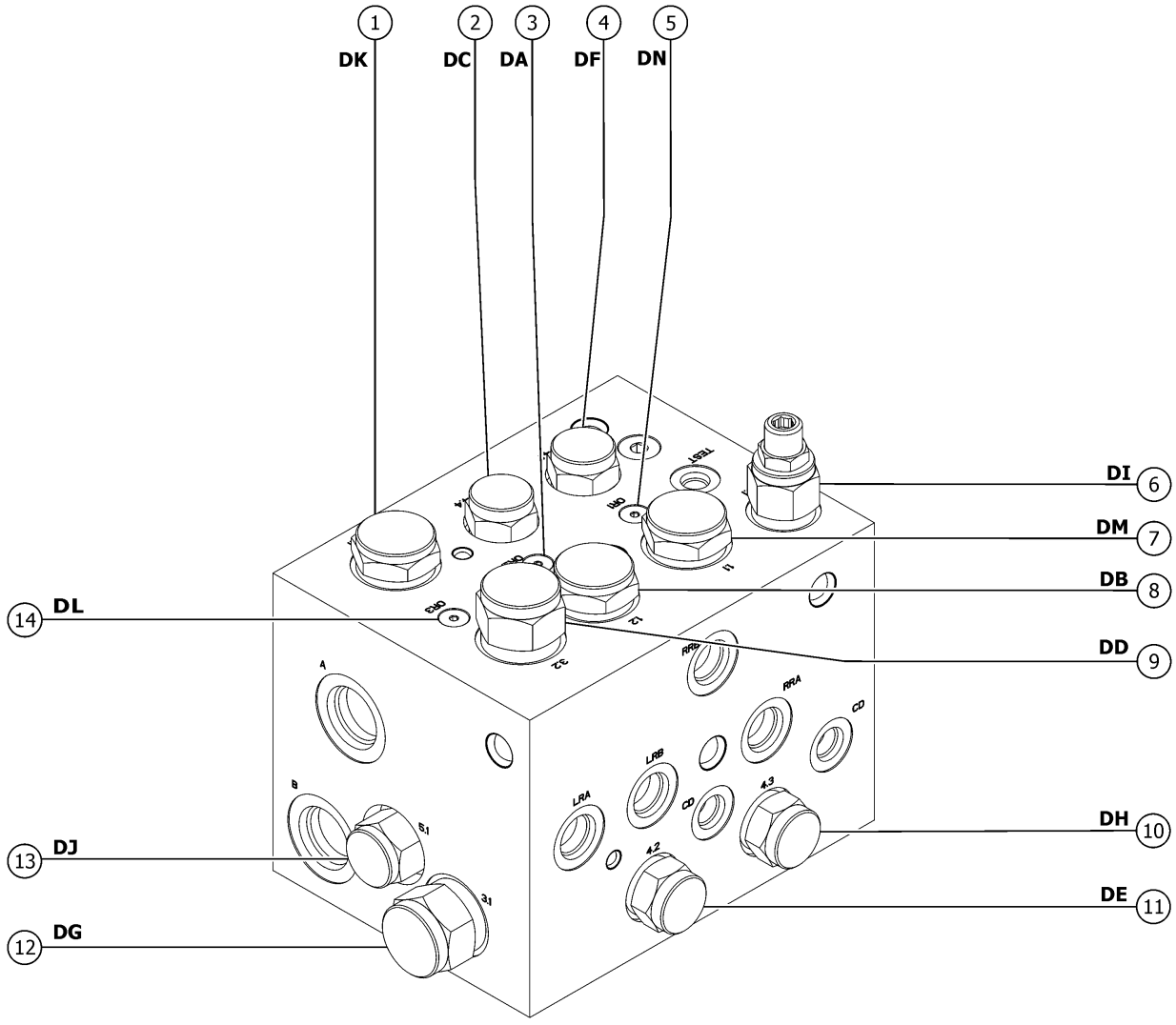
1
DK
2
DC
3
DA
4
DF
5
DN
DI
6
DM
7
DB
8
DD
9
DH
10
DE
11
DJ
13
DG
12
DL
14
TEST
LRA
LRB
RRA
CD
4.3
4.2
5.1
3.1

Item	*Part No.*	*Description*	*Qty.*
12-	139727GT	SEAL KIT, VALVE	
13	139715GT	VALVE, SHUTTLE, FIXED DJ, Directs oil from low pressure side to hot oil Relief Valve.	1
13-	139726GT	SEAL KIT, VALVE	
14	139719GT	ORIFICE, 0.040" DL, Prevents scrub at high steer angles by allowing some bypass flow around the right flow divider	1

403.1 Pumps

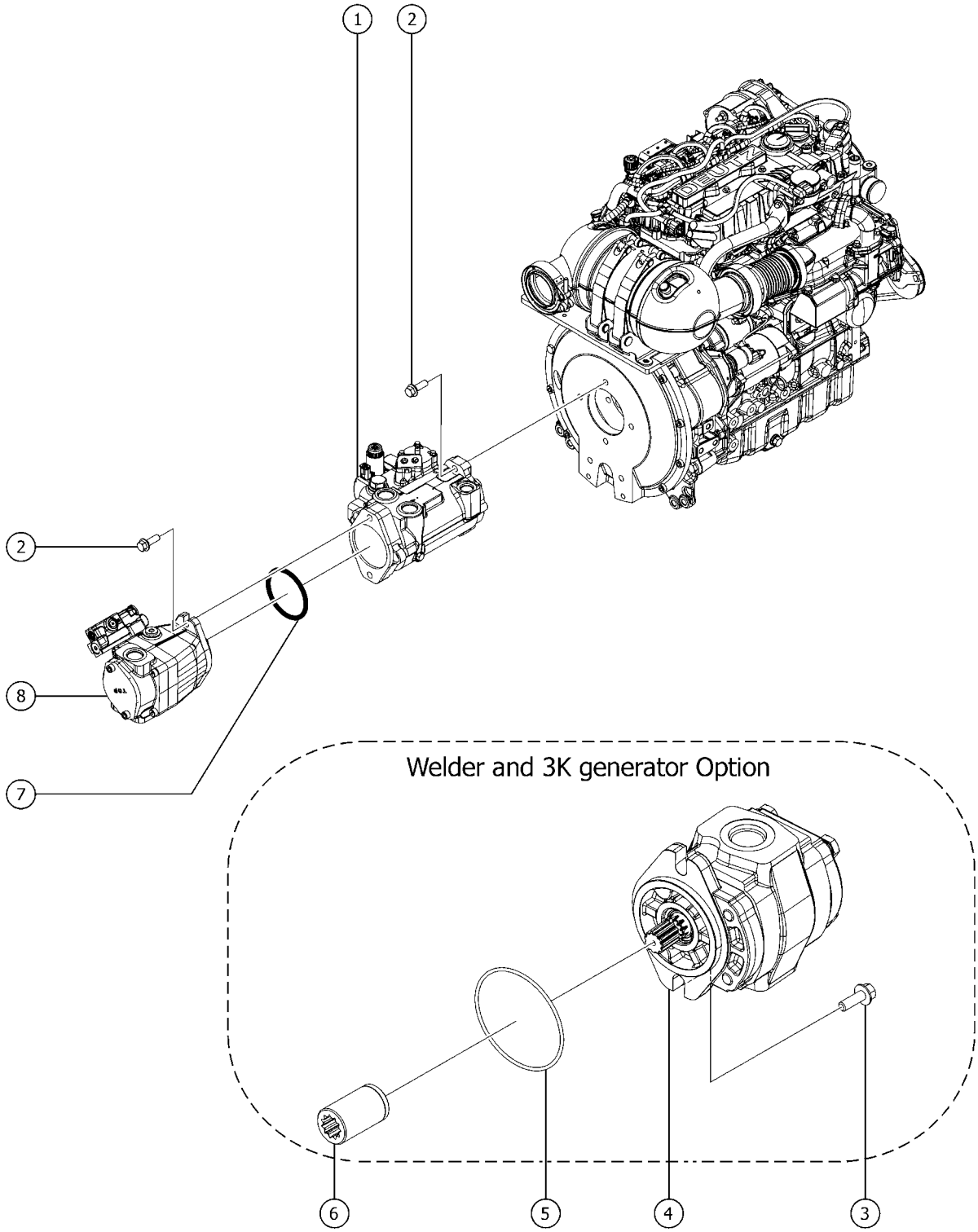

403.1 Pumps

Item	Part No.	Description	Qty.
1	1270946GT	PUMP, DRIVE, M46 HC	1
1-	1274336GT	SEAL KIT, HIGH CURRENT M46 PUMP	
2	1253498GT	SCREW,HHF,1/2-13X1.5,8,ZAG	4
3	231530GT	SCREW,HHF,M10-1.5X25,DIN6921,0.9,ZAB	2
4	139799GT	PUMP,LIFT,1 SECTION	1
4-	147550GT	KIT, SEAL, PUMP, 1 SECTION	
5	83141GT	O-RING, .103 X 3.237, NBR/NTRL, 90D	1
6	1284023GT	GEN PUMP DRIVE LINK	1
7	43683GT	O-RING,2-042 N674-70***	1
8	1282175GT	PUMP, FUNCTION, 25CC, LS (1284023, drive link not included)	1
8B	1284023GT	GEN PUMP DRIVE LINK	

404.1 Platform Rotate and Jib Boom/Platform Rotate Manifold

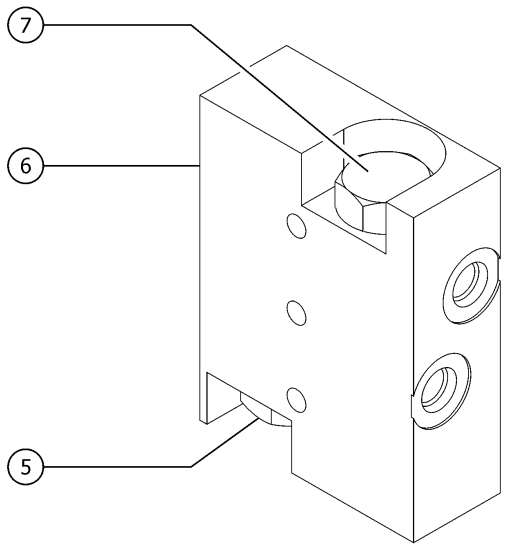

Platform Rotate Manifold

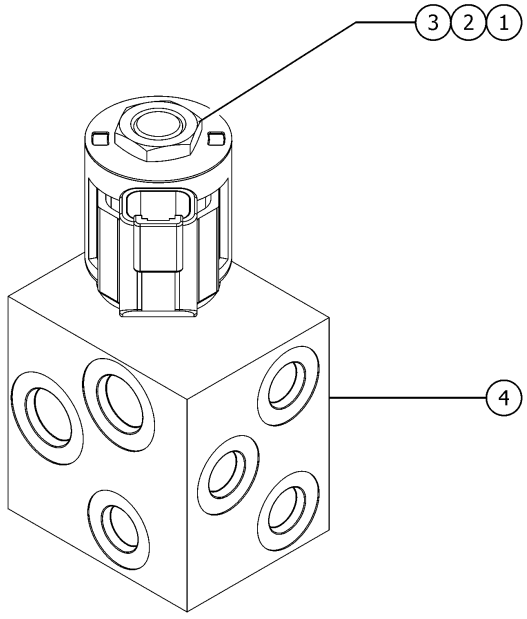

Jib Select Manifold

Item	*Part No.*	*Description*	*Qty.*
1	44174GT	NUT-COIL SHORT	1
2	52897GT	VALVE,SOLENOID, 2POS/3WAY***	1
2-	52371GT	SEAL KIT, VALVE	1
3	104759GT	COIL,12VDC #8 DTSCH IP69 ECOIL	1
4	1281250GT	MANIFOLD, JIB SELECT W/-6 PORTS includes items 1-3	1
5	62506GT	VALVE - COUNTERBALANCE** Platform rotate left	1
5-	43018GT	SEAL KIT (39345)	
6	1270810GT	MANIFOLD, ROTATOR, CB	1
6-	62507GT	O-RING, ROTATOR MANIFOLD	2
7	62506GT	VALVE - COUNTERBALANCE** Platform rotate right	1
7-	43018GT	SEAL KIT (39345)	

405.1 Generator Manifold

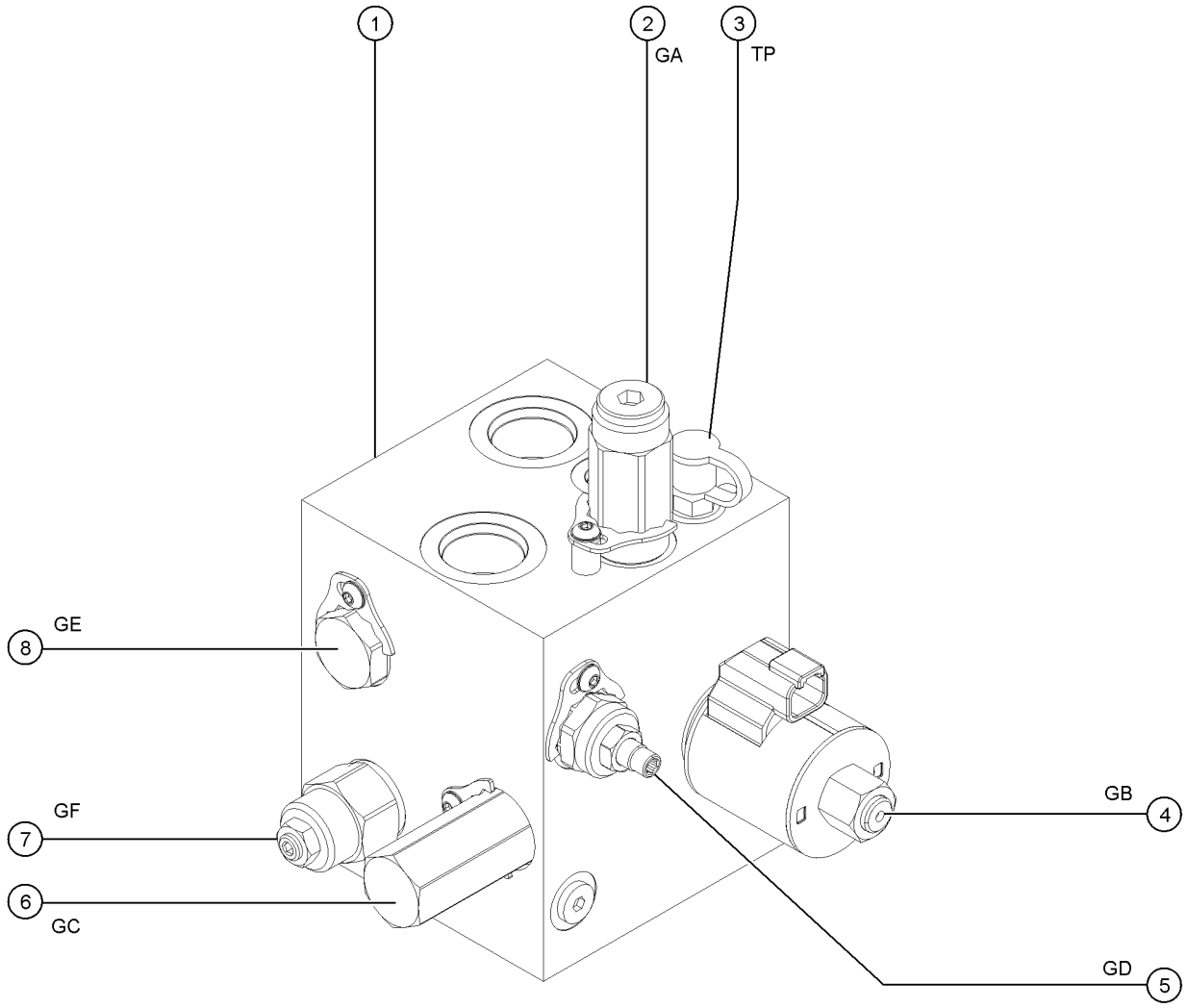

Item	Part No.	Description	Qty.
A	115048GT	#6 PLUG	3
A	1285147GT	PLUG, PORT, SAE4, 6103004	1
1	1281789GT	MANIFOLD, HYD, LIFT POWER, WELDER GENERATOR (Complete)	1
2	1285141GT	VALVE, RELIEF, RV50-26H-0-P-50/36 GA, Generator relief valve	1
2-	1285145GT	KIT, LOCKDOWN, HYD VALVE, 5965000.1000M	
3	48997GT	NIPPLE,DIAGNOSTIC,#4 TP, Test port	1
3-	48880GT	CAP,DIAGNOSTIC NIPPLE	
4	1285143GT	VALVE, SOLENOID, HSV10-21-0-U-0 GB, Charge pressure circuit	1
4-	97469GT	COIL#10 E-COIL,10V ZENER DIODE	
4-	1285144GT	KIT, LOCKDOWN, HYD VALVE, 5965000.1063	
5	1285142GT	VALVE, NEEDLE, NV10-22A-0-N GD, Charge pressure circuit	1
5-	1285146GT	KIT, LOCKDOWN, HYD VALVE, 5965000.1000	
6	75462GT	VALVE,DIFFERENTIAL SENSE230PSI GC, Pilot valve to diverter valve	1
6-	62337GT	SEAL KIT, VALVE	
6-	1285146GT	KIT, LOCKDOWN, HYD VALVE, 5965000.1000	
7	1284399GT	VALVE, COUNTERBALANCE, 3:1 1000PSI, CBEA-LIN GF, Adds backpressure to generator circuit	1
8	62127GT	VALVE-CHECK,SIZE 10(59599) GE, Prevents oil to generator	1
8-	1285146GT	KIT, LOCKDOWN, HYD VALVE, 5965000.1000	

406.1 Platform Manifold, S-60 XC

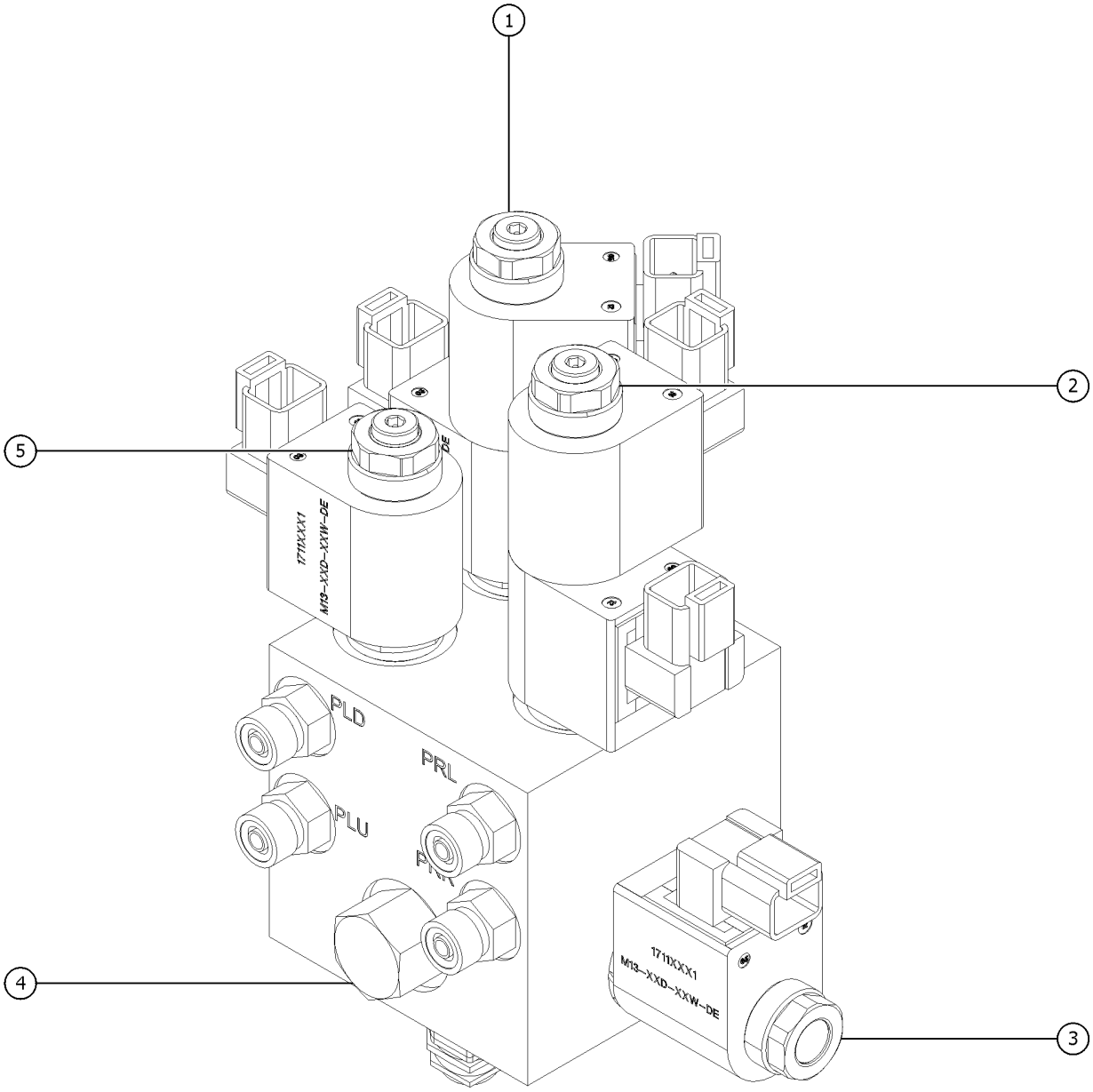

Item	Part No.	Description	Qty.
A	1303390GT	MANIFOLD, E-LEVEL, NON-JIB (Complete)	
1	1314181GT	VALVE, PROPORTIONAL Platform level proportional valve	1
1-	122120GT	SEAL KIT, SOLENOID VALVE	
1-	1314555GT	COIL, SOLENOID VALVE, 20W	
1-	1314556GT	KIT, COIL & NUT	
2	122121GT	SOLENOID VALVE Platform rotate CW/CCW	1
2-	122120GT	SEAL KIT, SOLENOID VALVE	
2-	122148GT	COIL, SOLENOID VALVE,20W	
2-	52943GT	NUT, SOLENOID VALVE COIL	
3	1314182GT	VALVE, SPOOL	1
3-	122120GT	SEAL KIT, SOLENOID VALVE	
3-	122148GT	COIL, SOLENOID VALVE,20W	
3-	106079GT	KIT, COIL & NUT SAUER EDH VALVE	
4	31099GT	VALVE, FLOW REGULATOR Platform rotate flow Control,0.3 gpm	1
4-	74902GT	SEAL KIT, VALVE	
5	1314183GT	VALVE, SPOOL Platform level up/down	1
5-	1314554GT	SEAL KIT, SOLENOID VALVE	
5-	122148GT	COIL, SOLENOID VALVE,20W	
5-	106079GT	KIT, COIL & NUT SAUER EDH VALVE	

407.1 Platform Manifold, S-65 XC

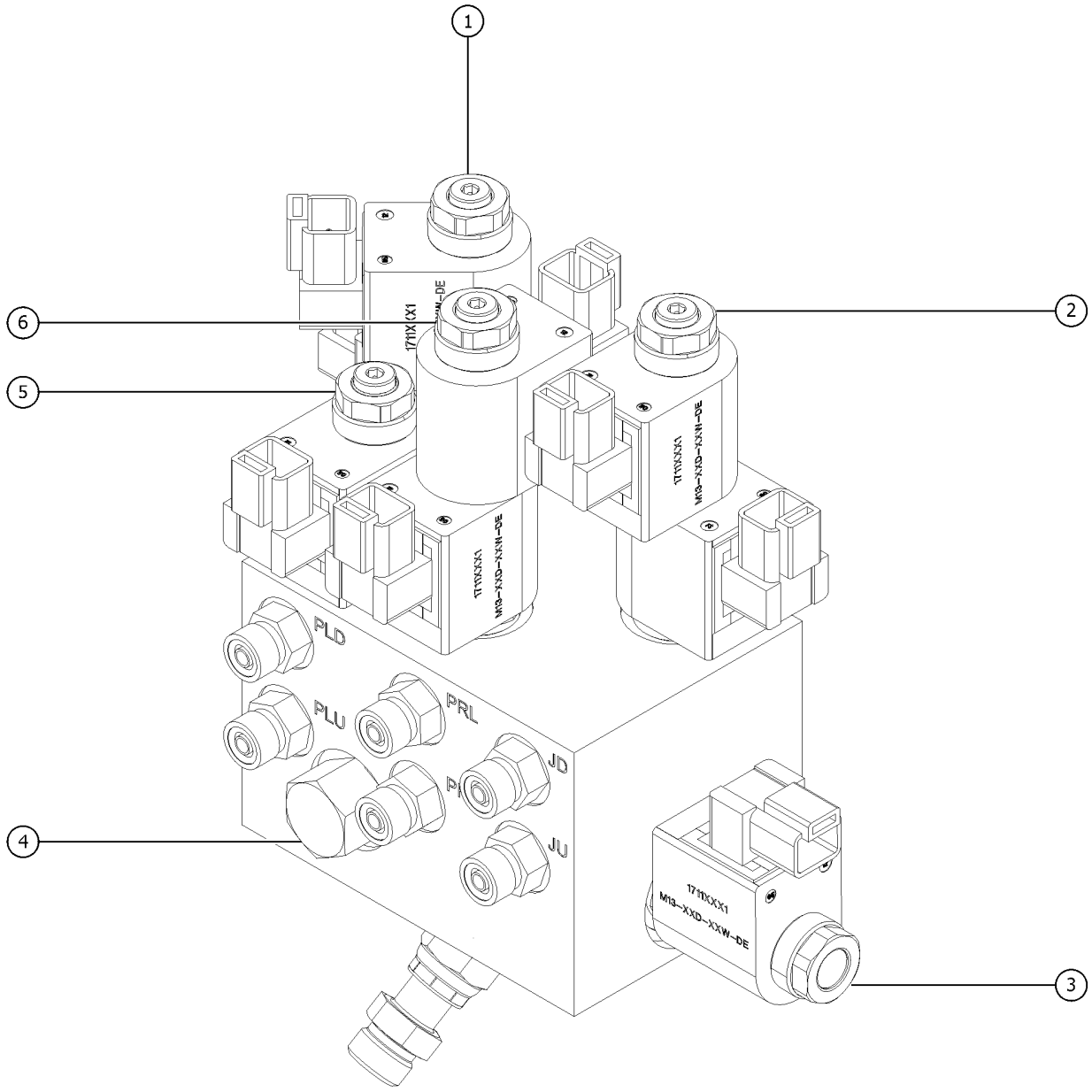

Item	Part No.	Description	Qty.
A	1303389GT	MANIFOLD, E-LEVEL, JIB (Complete)	
1	1314181GT	VALVE, PROPORTIONAL Platform level proportional valve	1
1-	122120GT	SEAL KIT, SOLENOID VALVE	
1-	1314555GT	COIL, SOLENOID VALVE, 20W	
1-	1314556GT	KIT, COIL & NUT	
2	1314181GT	VALVE, PROPORTIONAL Jib up/down	1
2-	122120GT	SEAL KIT, SOLENOID VALVE	
2-	1314555GT	COIL, SOLENOID VALVE, 20W	
2-	1314556GT	KIT, COIL & NUT	
3	1314182GT	VALVE, SPOOL	1
3-	122120GT	SEAL KIT, SOLENOID VALVE	
3-	122148GT	COIL, SOLENOID VALVE,20W	
3-	106079GT	KIT, COIL & NUT SAUER EDH VALVE	
4	31099GT	VALVE, FLOW REGULATOR Platform rotate flow Control,0.3 gpm	1
4-	74902GT	SEAL KIT, VALVE	
5	1314183GT	VALVE, SPOOL Platform level up/down	1
5-	1314554GT	SEAL KIT, SOLENOID VALVE	
5-	122148GT	COIL, SOLENOID VALVE,20W	
5-	106079GT	KIT, COIL & NUT SAUER EDH VALVE	
6	122121GT	SOLENOID VALVE Platform rotate CW/CCW	1
6-	122120GT	SEAL KIT, SOLENOID VALVE	
6-	122148GT	COIL, SOLENOID VALVE,20W	
6-	52943GT	NUT, SOLENOID VALVE COIL	

501.1 Deutz D2011L03i, View 1

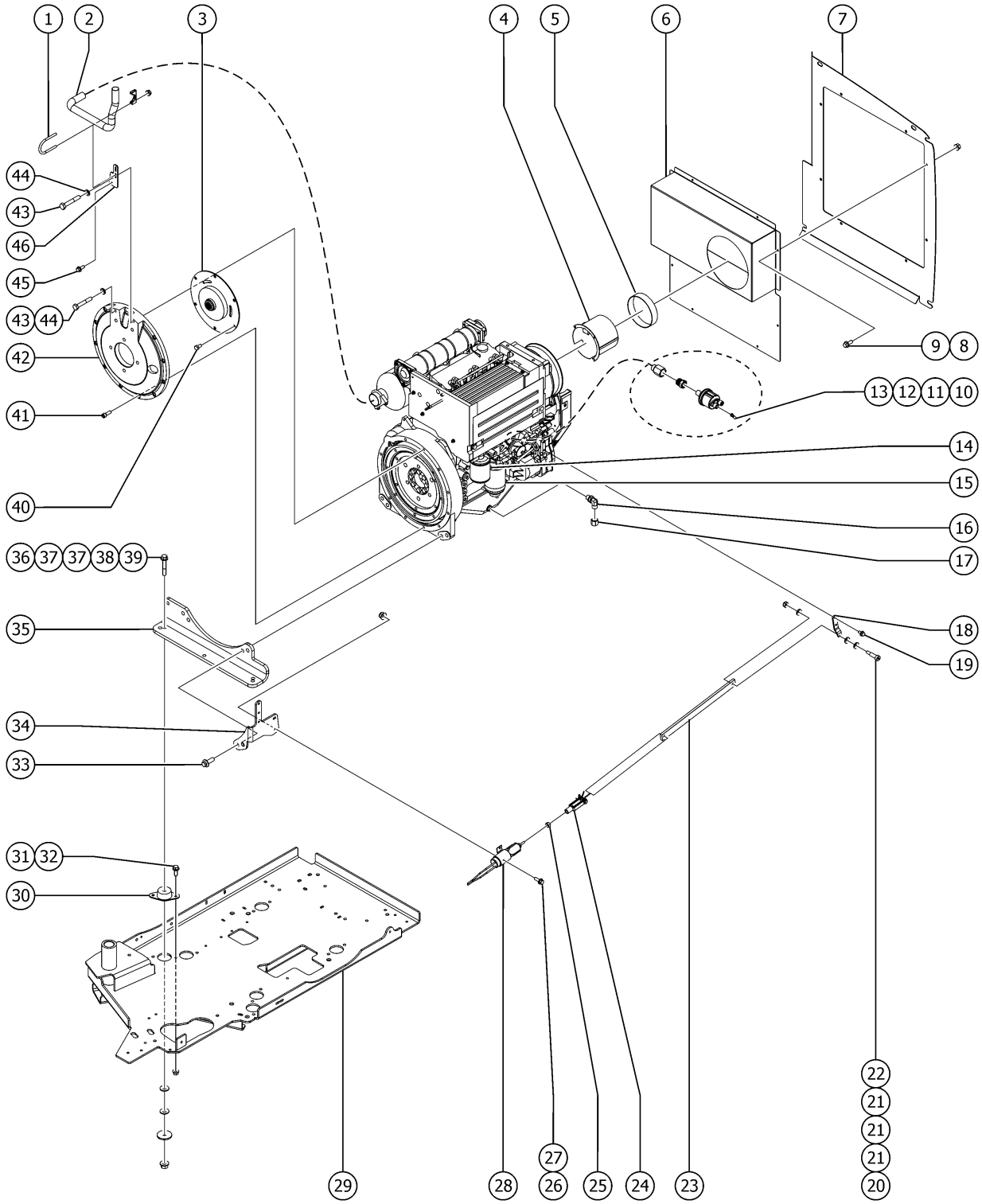

501.1 Deutz D2011L03i, View 1

Item	Part No.	Description	Qty.
A	160687GT	ENGINE,DEUTZ,D2011L03i TPEM	1
1	70385GT	CLAMP,EXHAUST,2.00 PLATED	1
2	822693GT	TAILPIPE, DEUTZ, TPEM & ROW	1
3	128004GT	COUPLER,15 TOOTH,FBA,SAE8***	1
4	101140GT	WELDMENT, AIR INTAKE TUBE	1
5	119219GT	TRIM,EDGE,1/8X3/4 END BULB	10 inches
5-	31523GT	CLAMP,HOSE,8.50 DIA***	1
6	1267235GT	FORMING,DEUTZ AIR INTAKE BAFFL	1
7	106172GT	BAFFLE,AIR INTAKE***	1
8	1256855	SCREW,HHF,1/4-20X.625,8,ZAG	8
9	824027GT	NUT, TL FLG, 1/4-20, G, ZAG	8
10	13597GT	TERMINAL,#10 RING,BLUE	1
11	30810GT	SENDING UNIT,OIL PRESSURE***	1
12	106033GT	ADAPTER,NPT 6-4	1
13	106034GT	ADAPTER,M18	1
14	49924GT	FILTER,OIL,DEUTZ Genie Genuine Part. See PN 1255653 for compatible aftermarket replacement.	1
15	29560GT	FILTER,FUEL/WTR SEP, DTZ 1008 Genie Genuine Part. See PN 1254826 for compatible aftermarket replacement.	1
16	54428GT	FITTING, HYDRUALIC, 90DEG, O-RING	1
17	69775GT	CAP, 520112-8	1
18	1267237GT	LEVER,GOVERNOR ACTUATOR**	1
19	237238GT	SCREW,HHF,M6-1.0X12,DIN6921,10	2
20	1257076GT	BOLT,SHS,1/4-28X4,ZAG	1
21	825355GT	WASHER,FLAT,M6,DIN125,ZAB	3
22	5365GT	NUT,NYLOCK,10-24	1
23	120234GT	THROTTLE LINKAGE,DIESEL***	1
24	21130GT	CLEVIS YOKE-1/4-28,PLTD W/PIN	1
25	824041GT	NUT, 1/4-28, 8, ZAG	1

501.1 Deutz D2011L03i, View 1

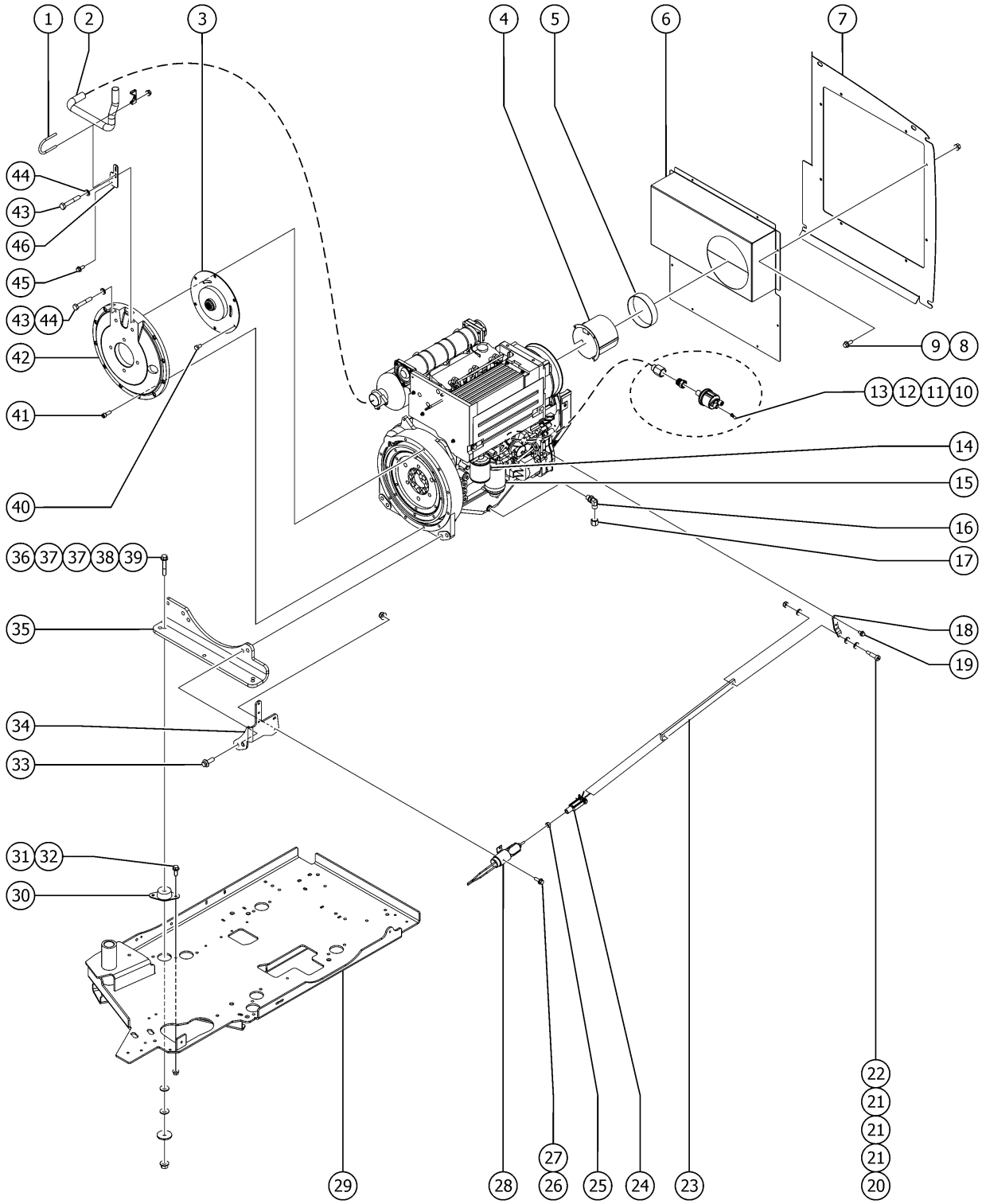

501.1 Deutz D2011L03i, View 1

Item	Part No.	Description	Qty.
26	824078GT	SCREW,HHF,1/4-20X.75,8,ZAG	2
27	1277924GT	NUT,NYLOCK FLG,1/4-20,F,ZAG	2
28	77402GT	SOLENOID,THROTTLE ACTUATOR DSL to SN S60XCH-45713	
28-	161087GT	ASSY,SOLENOID THR_ACT RPM Z45 from SN SN S60XCH-45714	
29		REF. WELDMENT, ENGINE TRAY WITH BEARINGS (Refer to 528.1)	1
30	70452GT	ISOLATOR,ENGINE VIBRATION	2
31	824090GT	SCREW,HHF,3/8-16X1,8,ZAG	4
32	1274322GT	NUT,NYLOCK FLG,3/8-16,F,ZAG	4
33	1251899GT	SCREW,HHF,M14-2.0 X 40,DIN 6921,10.9, ZAB	4
34	1270141GT	MNT BRKT, POS BATT CABLE, SOLENOID	1
34-	110149GT	CABLE TIE,DFT MOUNT,BLK,6.5"	2
35	1267238GT	FORMING,REAR ENGINE MOUNT***	1
36	1295334GT	TERM QC TAB - #8 RING, .250, 45 DEG, BRASS	2
37	1255760GT	WASHER,FLAT,1/2,USS,ZAG	4
38	1256283GT	WASHER,FLAT,.5X2.25X.188,ZAG	2
39	1274172GT	NUT,NYLOCK FLG,1/2-13,G,ZAG	2
40	825351GT	SCREW,HHC,M10-1.5X20,DIN933,10.9,ZAB	6
41	1255666GT	SCREW,SHC,M10-1.5X30,DIN912,12.9,ZAB	9
42	70381GT	COVER,FLYWHEEL CASTING	1
43	1257837GT	SCREW,HHC,M10-1.5X65,DIN931,10.9,ZAB	2
44	824142GT	WASHER,LOCK,M10,ZAB	2
45	1255469GT	SCREW,HHF,1/2-13X1.25,8,ZAG	1
46	1267239GT	FORMING,SOLENOID MOUNT	1

502.1 Deutz D2011L03i, View 2

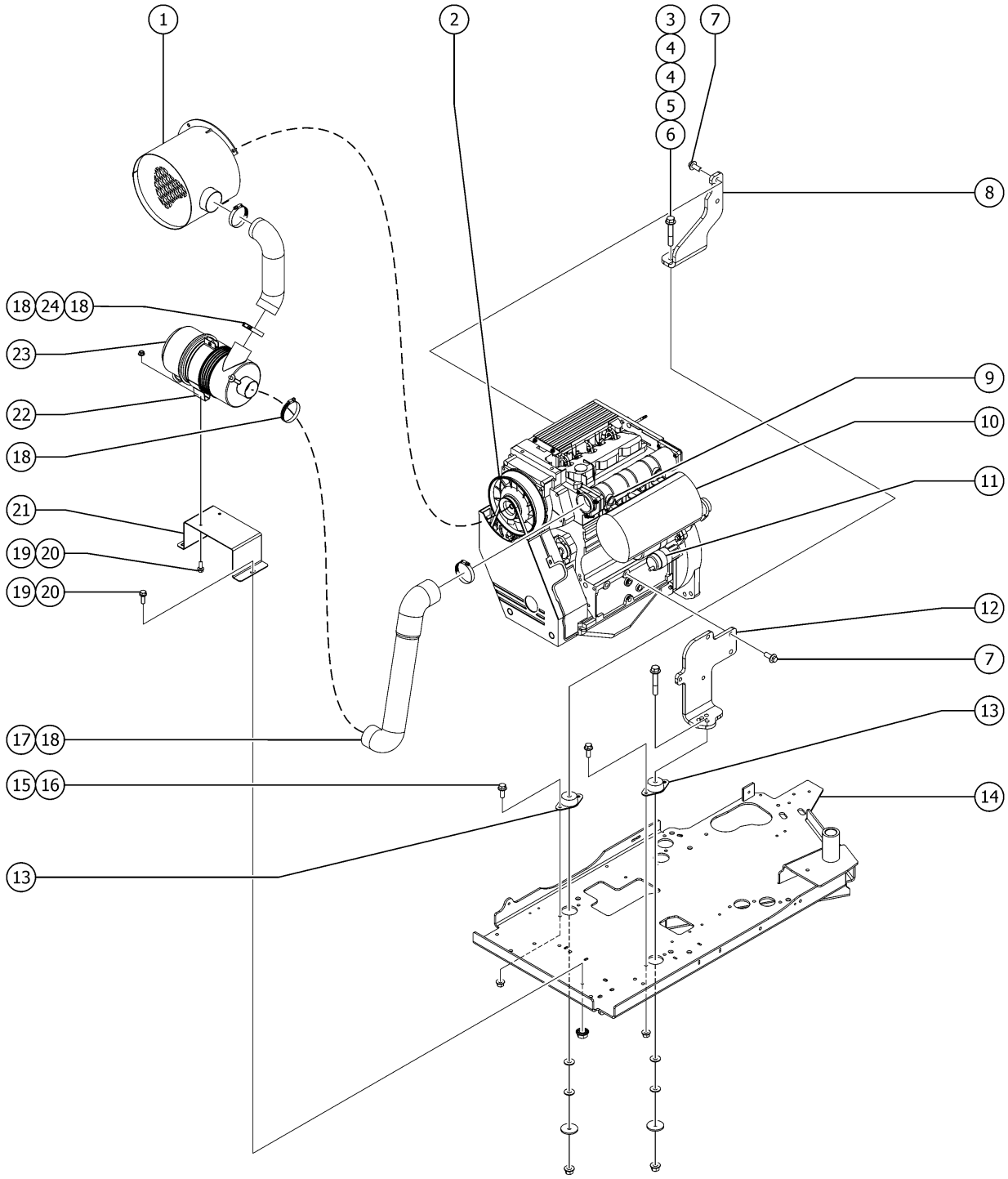

502.1 Deutz D2011L03i, View 2

Item	Part No.	Description	Qty.
1		Ref. WELDMENT,AIR INTAKE TUBE (Refer to 501.1)	
2	35586GT	ALTERNATOR, DEUTZ F3L10/F4L10*	1
3	1295334GT	TERM QC TAB - #8 RING, .250, 45 DEG, BRASS	2
4	1255760GT	WASHER,FLAT,1/2,USS,ZAG	4
5	1256283GT	WASHER,FLAT,.5X2.25X.188,ZAG	2
6	1274172GT	NUT,NYLOCK FLG,1/2-13,G,ZAG	2
7	1256776GT	SCREW,HHF,M14-2.0X35,DIN6921,10.9,ZAB	5
8	120258GT	FORMING,ENGINE MOUNT,FR***	1
9	31408GT	GLOW PLUG,L1011	1
10	89774GT	MUFFLER, DEUTZ F3L 2011F	1
11	70376GT	STARTER,DEUTZ,F4L1011F/F3L1011	1
12	120259GT	FORMING,ENGINE MOUNT,FL	1
13	70452GT	ISOLATOR,ENGINE VIBRATION	2
14		Ref. WELDMENT, ENGINE TRAY (Refer to 528.1)	1
15	824090GT	SCREW,HHF,3/8-16X1,8,ZAG	4
16	1274322GT	NUT,NYLOCK FLG,3/8-16,F,ZAG	4
17	70375GT	HOSE,AIR CLEANER	1
18	30971GT	CLAMP,HOSE,3.00"	4
19	824086GT	SCREW, HHF, 5/16-18 X 1, 8, ZAG	5
20	1255805GT	NUT,SERRATED,5/16-18,8,ZAG	5
21	70351PGT	FORMING,AIR CLEANER MOUNT PNTD	1
22	53952GT	BRKT,AIR CLEANER ORIENTATION**	1
23	63463GT	AIR CLEANER,NELSON***	1
23-	62420GT	FILTER, AIR D2.9L4	
23-	58415GT	CLIP,AIR CLEANER END CAP***	
23-	62420GT	FILTER, AIR D2.9L4	
23-	65810GT	BAFFLE, AIR CLEANER (27915)**	
23-	52866GT	EVACUATOR VALVE-AIR CLEANER	

502.1 Deutz D2011L03i, View 2

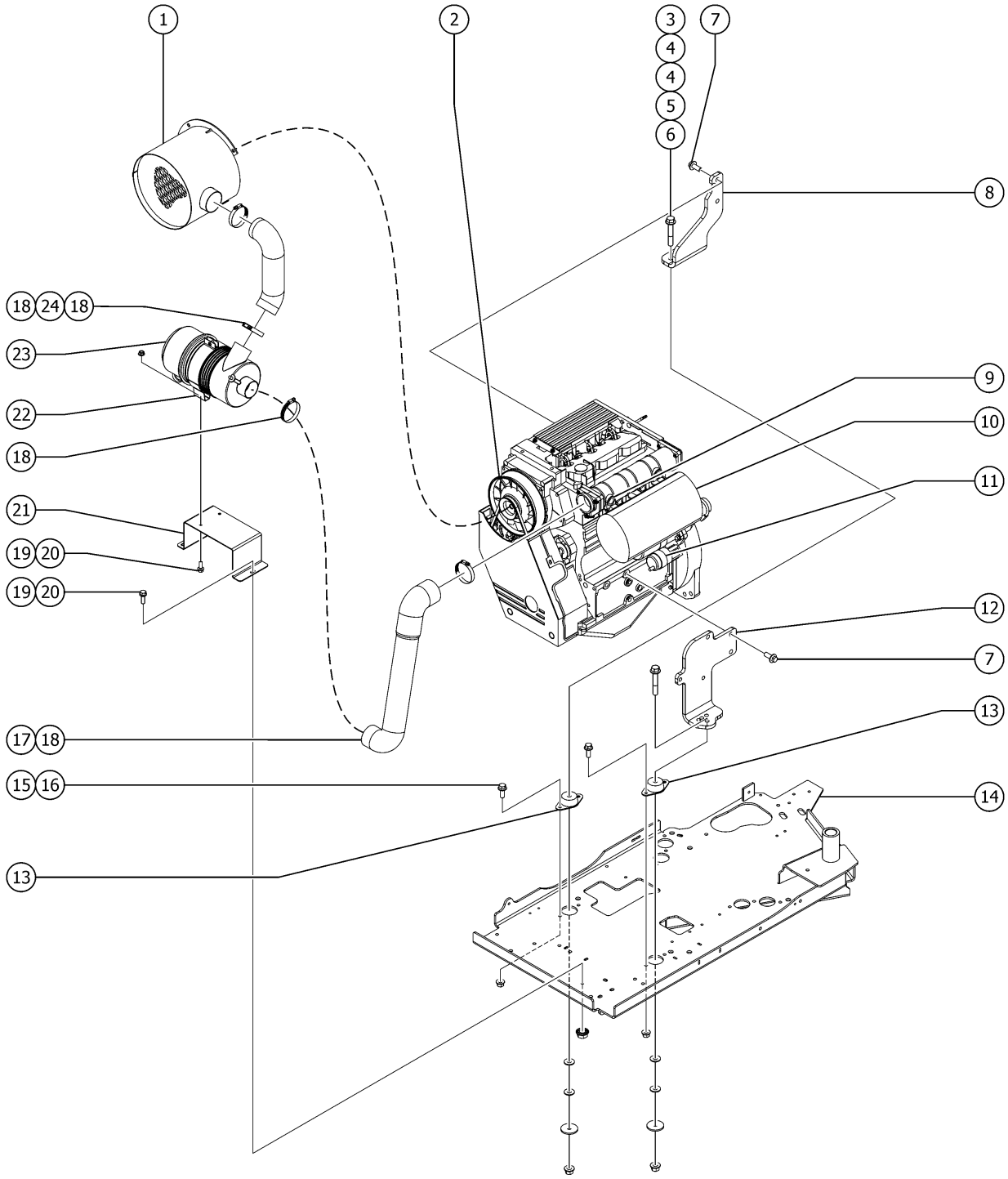

502.1 Deutz D2011L03i, View 2

Item	*Part No.*	*Description*	*Qty.*
23-	6888GT	SCREW, HHC, 1/4-20 X 1	
23-	5397GT	WASHER, FLAT, USS, 5/16-18	
23-	6782GT	NUT, NYLOCK, 5/16-18	
24	101006GT	TUBE,AIR CLEANER INLET	1

503.1 Ford MSG-425 EFI, View 1

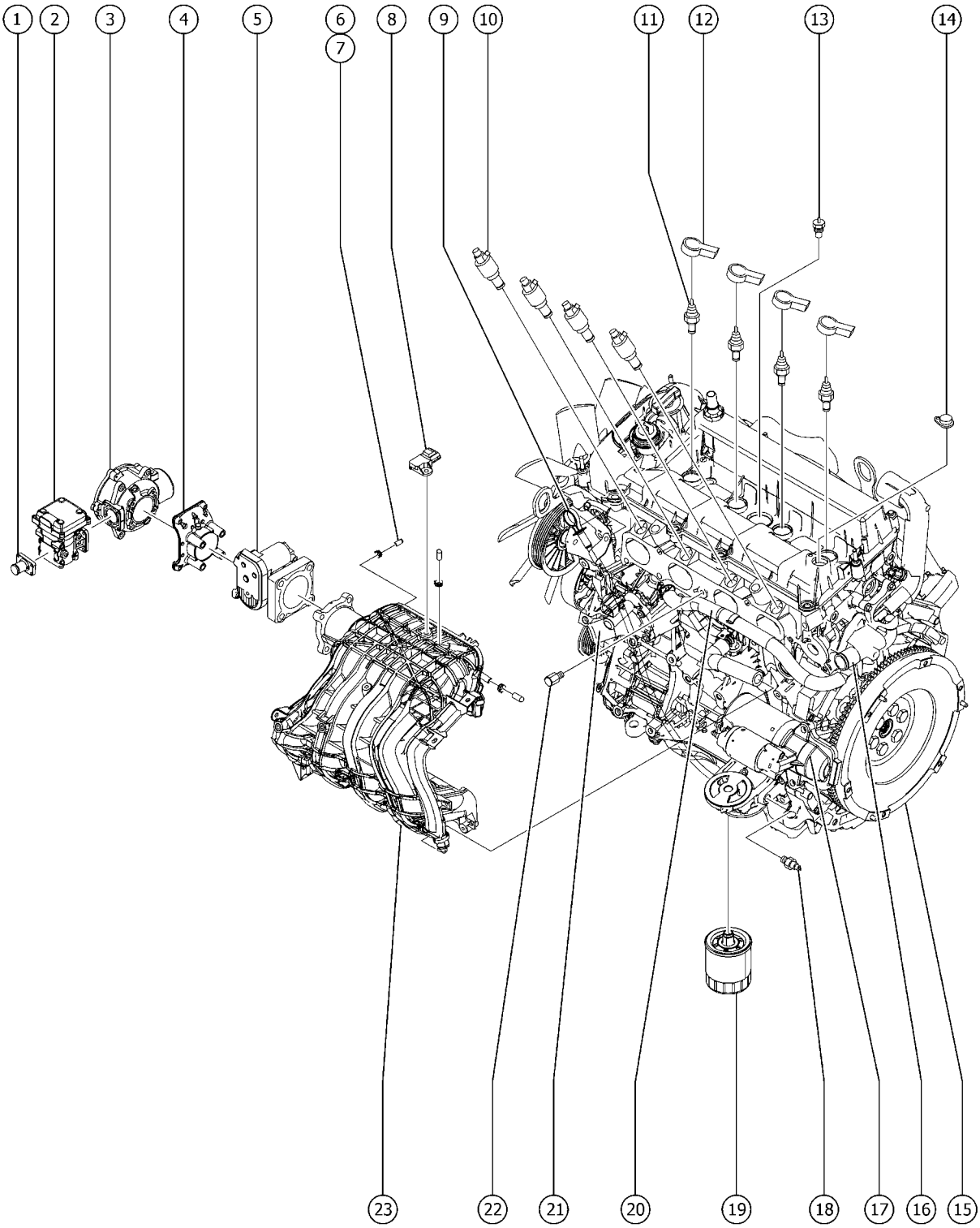

503.1 Ford MSG-425 EFI, View 1

Item	Part No.	Description	Qty.
A		For internal engine parts, contact engine dealer	
B	128165GT	RELAY,PWR/FUEL,FORD DSG423	
C	128166GT	RELAY,STARTER,FORD DSG/MSG	
D	215294GT	ENGINE HARNESS, MSG425	1
E	215295GT	SOLENOID, VAR. TIM, MSG425	
F	236799GT	ENGINE KIT,FORD MSG425 gas/LPS	
1	215285GT	FITTING, DEPR LP, MSG425	1
2	215284GT	REGULATOR,LP PRESSURE,MSG425	1
3	215280GT	MIXER, MSG425	1
3-	1313038GT	INLET SEAL, MIXER, MSG425 (215280)	
3-	1313039GT	O-RING, MIXER, MSG425 (215280)	
3-	1313040GT	QUAD RING, MIXER, MSG425 (215280)	
3-	215281GT	O-RING, SMOOTH, MSG425	
3-	215282GT	O-RING, RIBBED, MSG425	
4	215283GT	ADAPTER, MIXER/THRO, MSG425	1
5	88451GT	THROTTLE ACTUATOR*(BOSCH)	1
5-	88452GT	GASKET,THROTTLE ACTUATOR***	
6	217820GT	CAP, INT. MFLD. VAC, MSG425	2
7	119568GT	CLAMP,SPRING,1/2"	3
8	119475GT	MAP SENSOR, DSG-423	1
8-	119965GT	COVER,DUST,IDLER,FORD DSG423	
9	220230GT	DIPSTICK, MSG425	1
9-	220231GT	O-RING,DIPSTICK,MSG425 (not shown, use with dipstck part 220230)	
9-	824028GT	NUT,TL FLG,5/16-18,G,ZAG (not shown, use to mount dipstck part 220230)	
9-	824085GT	SCREW, HHF, 5/16-18 X .75, 8, ZAG (not shown, use to mount dipstck part 220230)	
10	215299GT	INJECTOR, FUEL, MSG425	4
11	215287GT	SPARK PLUG, MSG425	4
12	215314GT	COIL ASSY, MSG425	4

503.1 Ford MSG-425 EFI, View 1

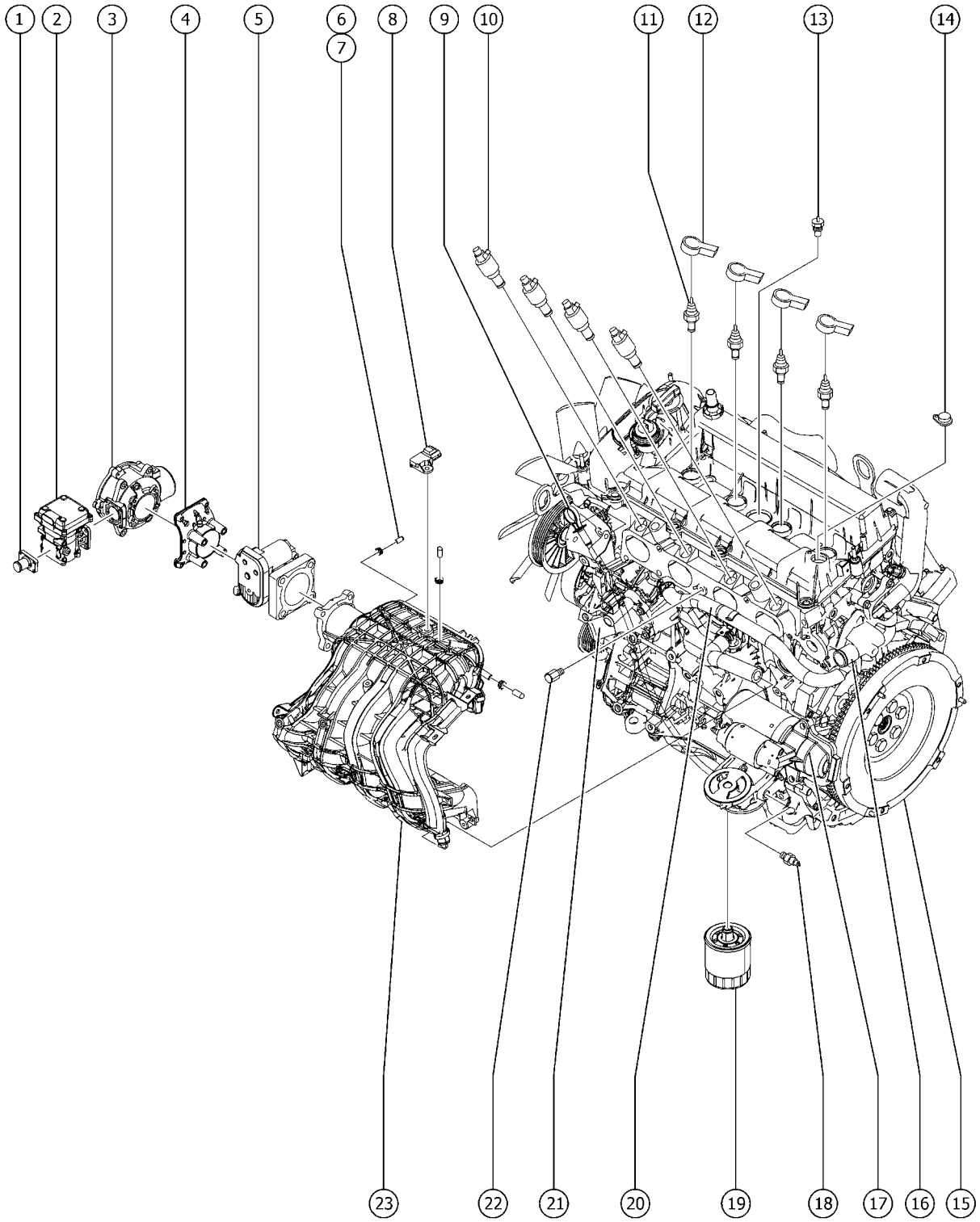

503.1 Ford MSG-425 EFI, View 1

Item	Part No.	Description	Qty.
13	215300GT	SENSOR, CYL. HEAD TEMP, MSG425	1
14	215308GT	SENSOR, CAM POS, MSG425	1
15	215278GT	FLYWHEEL ASSY, MSG425	1
16	215275GT	ADAPTER, WATER CONN, MSG425	1
17	1264894GT	KIT, HD STARTER INSTALL, MSG-4	1
17B	128166GT	RELAY,STARTER,FORD DSG/MSG for 215293	
17C	217823GT	STARTER PLUG SEAL, MSG425 for 215293	
18	215301GT	SWITCH, OIL PRES, MSG425	1
19	119139GT	OIL FILTER,DSG-423	1
19A	1277968GT	SEPERATOR ASSY,OIL,FORD MSG	1
20	215302GT	HOSE, COOLANT BYPASS, MSG425	1
21	215310GT	THERMOSTAT W/HOUSING, MSG425	1
22	215309GT	SENSOR, KNOCK, MSG425	1
23	215305GT	INTAKE MANIFOLD, MSG425	1
23A	1277969GT	GASKET,INTAKE MANIFOLD,MSG 425 for 215305	1

504.1 Ford MSG-425 EFI, View 2

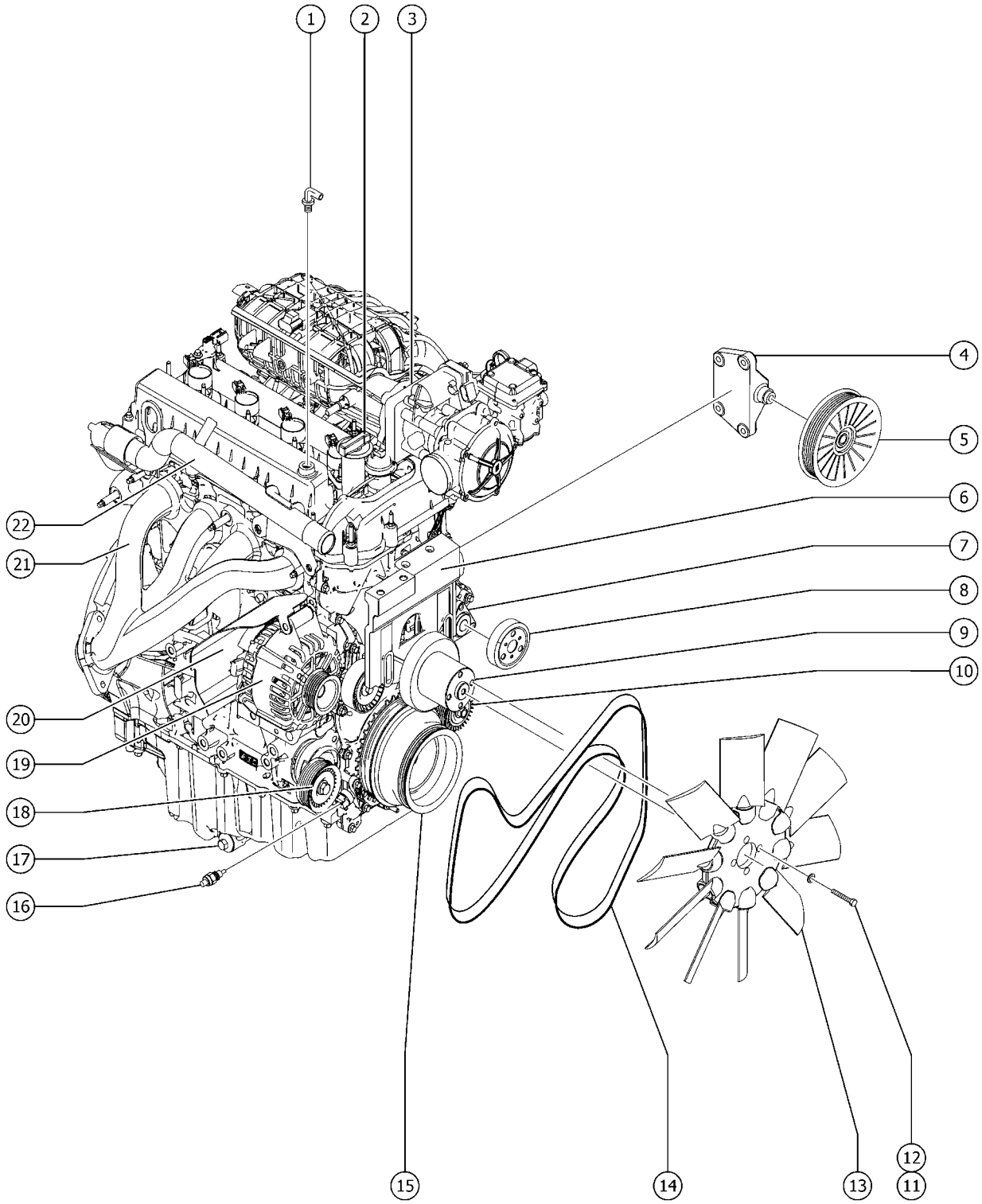

504.1 Ford MSG-425 EFI, View 2

Item	Part No.	Description	Qty.
A		For internal engine parts, contact engine dealer	
1	119474GT	VALVE,PCV FORD DSG-423	1
1-	75631GT	HOSE,AIR 3/8	
2	58632GT	CAP,OIL FILLER,FORD DSG 423	1
3	215279GT	PLATE, INT. MFLD ADAP, MSG425	
4	119477GT	IDLER BRACKET	1
5	215298GT	UPPER IDLER PULLEY, MSG425	1
6	1283575GT	KIT,FAN SUPPORT RETRO,FORD MSG For first time replacement	1
6-	1283571GT	BRACKET,FAN,FORD MSG included in kit 1283575GT	1
6-	1283572GT	BRACKET,IDLER,FORD MSG included in kit 1283575GT	1
6-	1283573GT	BOLT, BRACKET, SUPPORT,FORD MSG included in kit 1283575GT	2
6-	1283574GT	SCREW,HHC,M8X1.25.80 included in kit 1283575GT	1
7	215288GT	WATER PUMP, MSG425	1
8	215289GT	WATER PUMP PULLEY, MSG425	1
9	215271GT	FAN PULLEY, MSG425	1
9-	215270GT	FAN SPACER, MSG425	1
10	215313GT	LOWER IDLER PULLEY, MSG425	1
11	32309GT	SCREW,HHC,M8 X 60MM X 1.25	
12	49408GT	WASHER, LOCK, M8	
13	215269GT	FAN, MSG425	1
14	215291GT	BELT, FEAD, MSG425 (shown)	1
14B	215274GT	FAN DRIVE BELT, MSG425 Fan belt (not shown)	
15	215273GT	CRANK PULLEY, EXT, MSG425	1
16	215307GT	SENSOR, CRANK POS, MSG425	1
17	215311GT	PLUG, OIL DRAIN, MSG425	1
18	215290GT	PULLEY/TENSIONER, MSG425	1
19	1300536GT	ALTERNATOR,DSG-423,BOSCH	
19B	1253749GT	ALTERNATOR, MSG425 LPS LPS engine only	1

504.1 Ford MSG-425 EFI, View 2

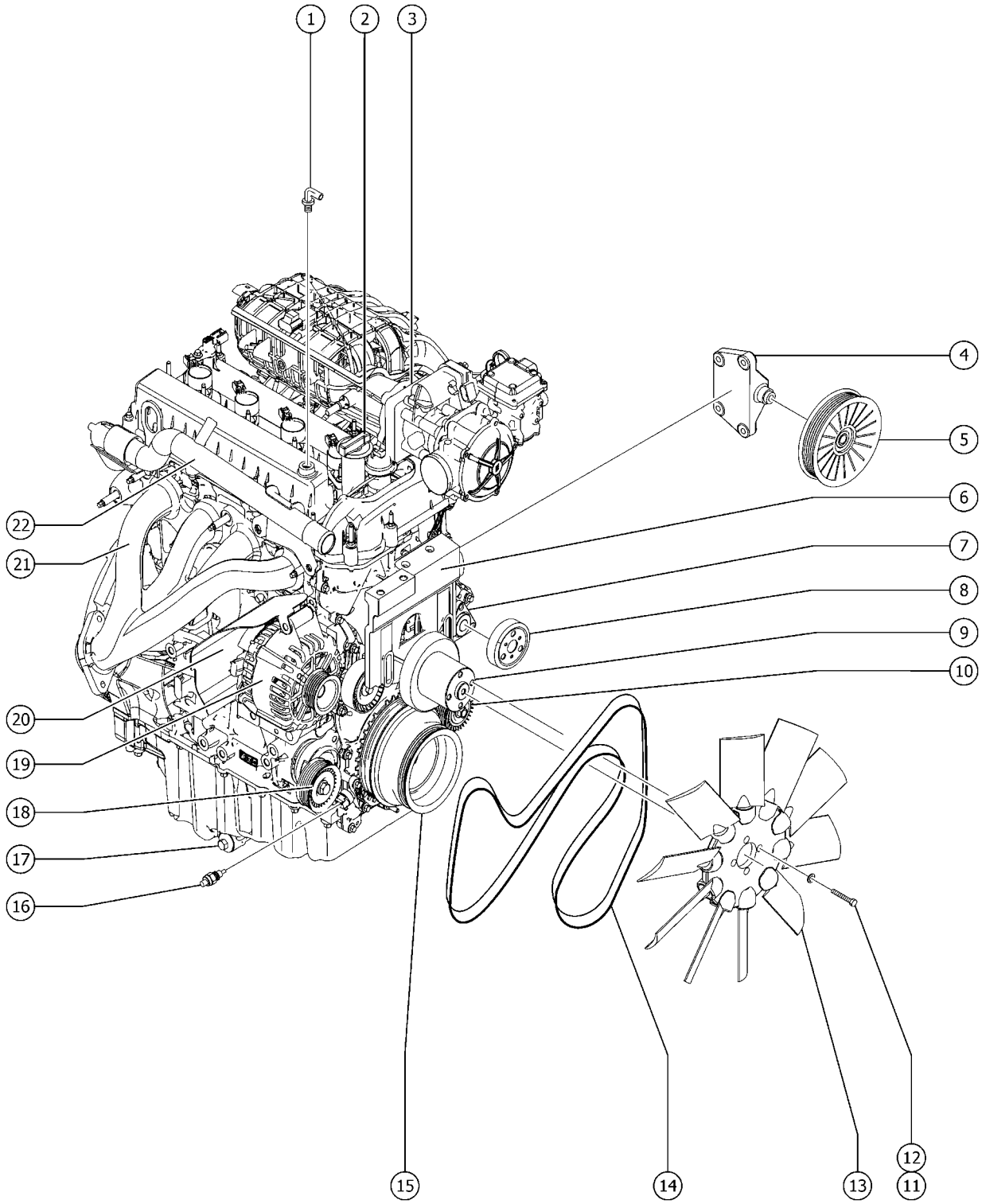

504.1 Ford MSG-425 EFI, View 2

Item	Part No.	Description	Qty.
20	227309GT	HEAT SHIELD,ALTERNATOR,FORD	1
21	215276GT	EXHAUST MANIFOLD, MSG425	1
21-	215277GT	GASKET, MSG425	
21-	217822GT	NUT, EXH. MANIFOLD, MSG425	
21-	823816GT	GASKET,EXHAUST,FORD MSG	
22	236373GT	PIPE,COOLANT RETURN, MSG425	1

505.1 Ford MSG-425 EFI, View 3

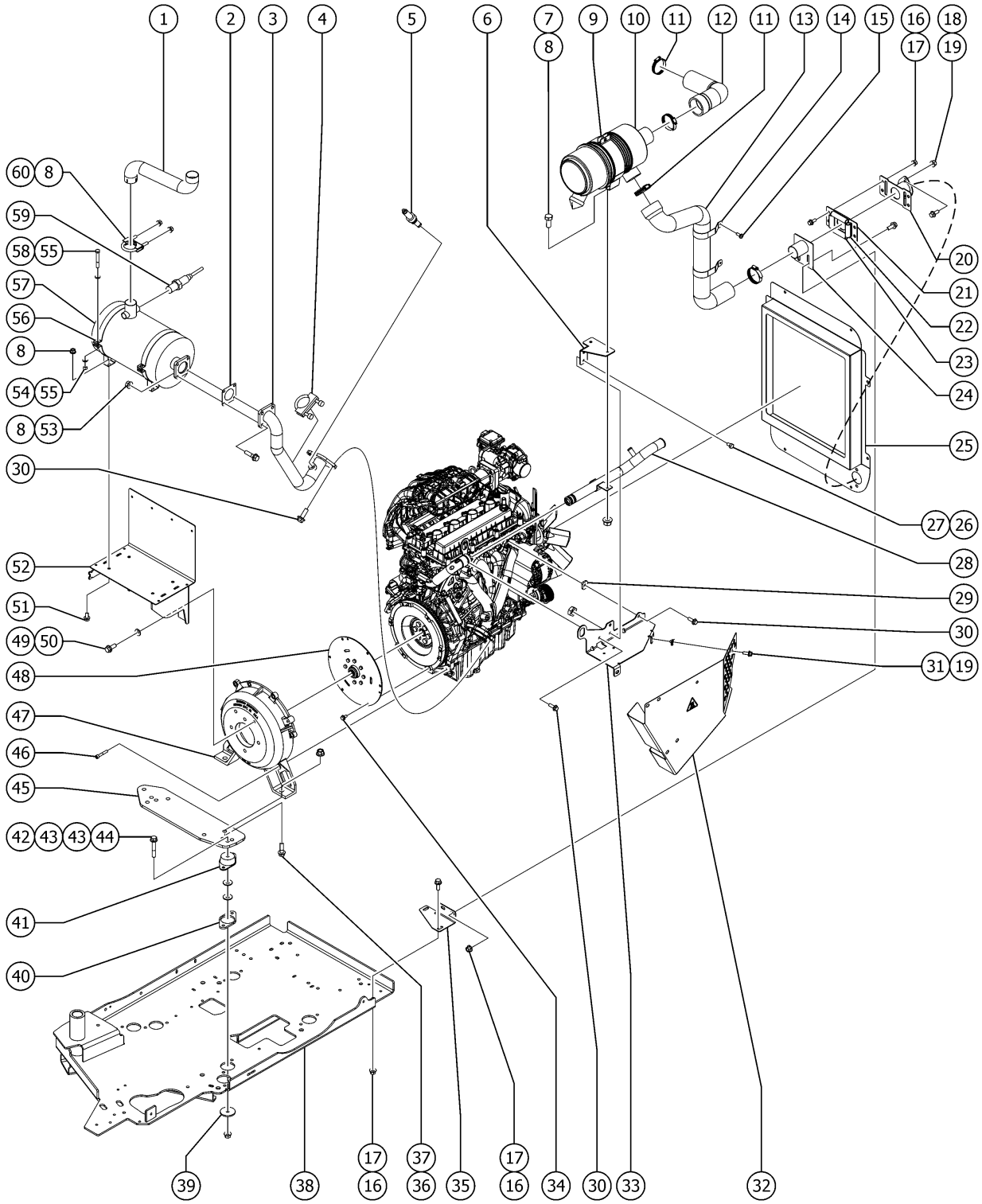

505.1 Ford MSG-425 EFI, View 3

Item	Part No.	Description	Qty.
A	236799GT	ENGINE KIT,FORD MSG425 gas/LPS	1
1	1264262GT	TAILPIPE, FORD MSG425	1
2	72343GT	GASKET,EXH FLANGE-FORD/PERKINS	1
3	218576GT	WDMT,HEADER PIPE,MSG425	1
4	32064GT	CLAMP,MUFFLER,1.75 INCH	2
5	215320GT	SENSOR, O2, MSG425	1
6	216367GT	REF. FORMING,AIR CLEANER MOUNT	1
7	1256464GT	SCREW,HHC,5/16-18X.75,8,ZAG	2
8	824028GT	NUT,TL FLG,5/16-18,G,ZAG	12
9	53952GT	BRKT,AIR CLEANER ORIENTATION**	1
10	111634GT	AIR CLEANER,FORD,T3	1
10-	227988GT	VACUATOR VALVE	
10-	77295GT	FILTER ELEMENT,AIR,NOLFF LPG	
11	45435GT	CLAMP,HOSE,2.50"	4
12	237146GT	HOSE, CLEAN AIR, MSG425	1
13	235659GT	HOSE, RAW AIR, MSG425	1
14	237385GT	HOSE HANGER, MSG425	2
15	824220GT	SCREW,PHPM SEMS ET,10-24X.5,ZA	2
16	824029GT	NUT, TL FLG, 3/8-16, G, ZAG	8
17	824090GT	SCREW,HHF,3/8-16X1,8,ZAG	8
18	824027GT	NUT, TL FLG, 1/4-20, G, ZAG	2
19	1256855	SCREW,HHF,1/4-20X.625,8,ZAG	4
20	1252050GT	WDMT, AIR INTAKE, MSG425	1
21	1252052GT	PLATE, SHROUD INTAKE, MSG425	1
22	1257450GT	SEAL,AIR INTAKE ADAPTER,LOWER	2
23	1259586GT	SEAL,AIR INTAKE ADAPTER,UPPER	2
24	1271058GT	WELDMENT, AIR INTAKE, MSG425	1
25		Ref. SHROUD, RADIATOR, FORD MSG425 (refer to 506.1)	

505.1 Ford MSG-425 EFI, View 3

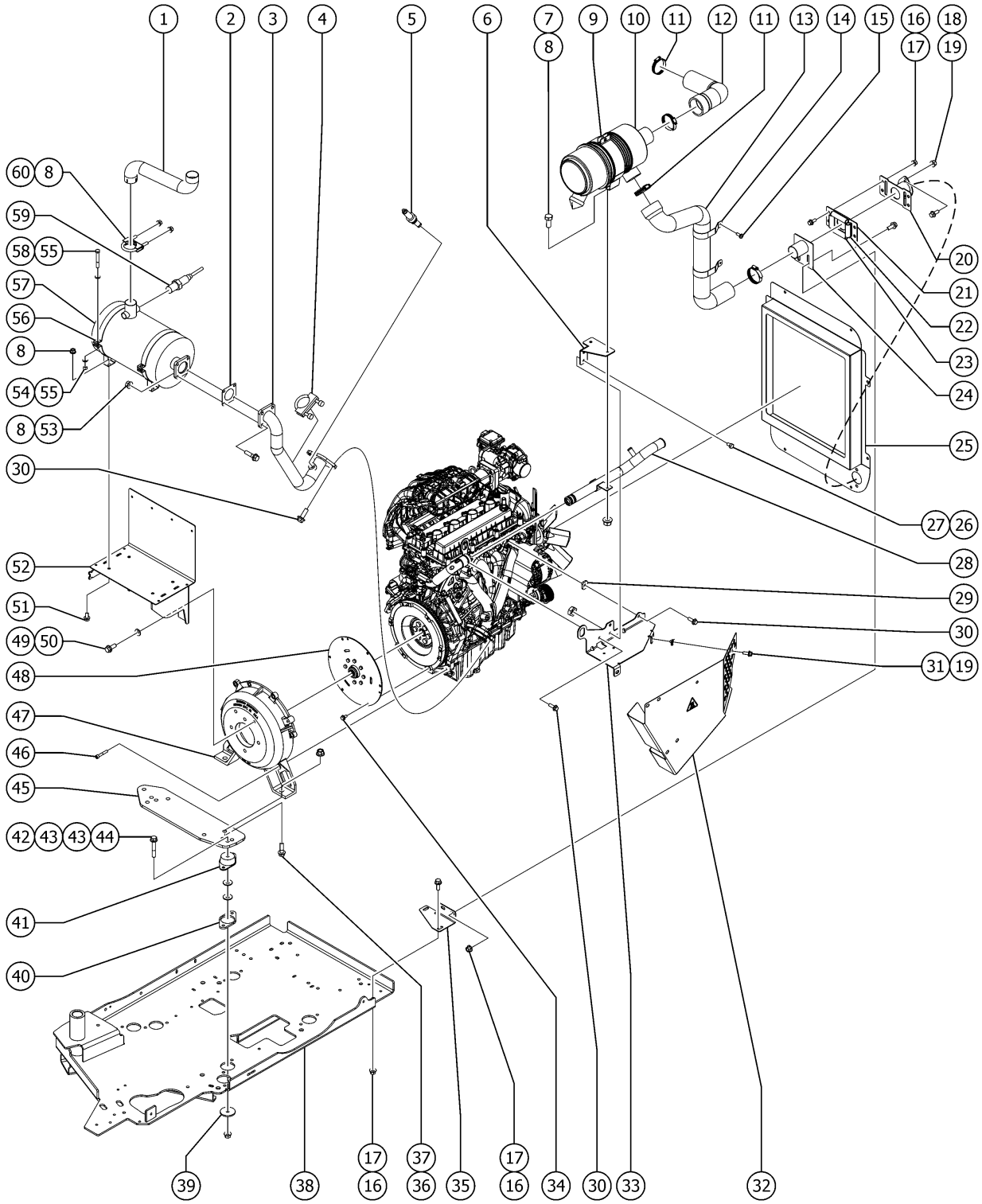

Item	Part No.	Description	Qty.
26	1257489GT	SCREW,HHC,3/8-16X.625,8,ZAG	2
27	824038GT	NUT, TL JAM, 3/8-16, A, ZAG	2
28	236373GT	PIPE,COOLANT RETURN, MSG425	1
29	215776GT	SPACER, AIR CLEANER, MSG425	1
30	232874GT	SCREW,HHF,M10-1.5X30,DIN6921,10.9,ZAB	8
31	56912GT	SPRING CLIP,1/4-20,.025-.15X.54,ZAG	2
32	160541GT	WDMT, HEAT SHIELD, MSG425	1
33	218668GT	FORMING, HEAT SHIELD MOUNT	1
34	1251983GT	SCREW,HHF,M8-1.25X16,DIN6921,10.9,ZAB	6
35	1271056GT	FORMING, AIR INTAKE, MSG425	1
36	826171GT	SCREW,HHF,1/2-13X1.75,ZAG LPS only	2
36B	1253498GT	SCREW,HHF,1/2-13X1.5,8,ZAG gas/LPS	2
37	1251997GT	NUT,TL FLG,1/2-13,G,ZAG	2
38		REF. WELDMENT, ENGINE TRAY (refer to 528.1)	
39	1256283GT	WASHER,FLAT,.5X2.25X.188,ZAG	4
40	216167GT	SPACER,ISOLATOR,MSG425 LPS only	2
41	70452GT	ISOLATOR,ENGINE VIBRATION	4
42	1295334GT	TERM QC TAB - #8 RING, .250, 45 DEG, BRASS	2
43	1255760GT	WASHER,FLAT,1/2,USS,ZAG	4
44	1274172GT	NUT,NYLOCK FLG,1/2-13,G,ZAG	2
45	236422GT	ENGINE MOUNT, REAR, MSG425	1
46	1257481GT	SCREW,SHC,M10-1.5X60,DIN912,12.9,ZAB LPS only	7
46B	1255666GT	SCREW,SHC,M10-1.5X30,DIN912,12.9,ZAB gas/LPS	3
47	119052GT	PUMP MOUNT,FORD DSG423	1
48	214446GT	COUPLER,15T,FBA,SAE 8,MSG425	1
49	1255469GT	SCREW,HHF,1/2-13X1.25,8,ZAG	2
50	825353GT	WASHER,FLAT,1/2,SAE,HRD,ZAG	2
51	824085GT	SCREW, HHF, 5/16-18 X .75, 8, ZAG	4

505.1 Ford MSG-425 EFI, View 3

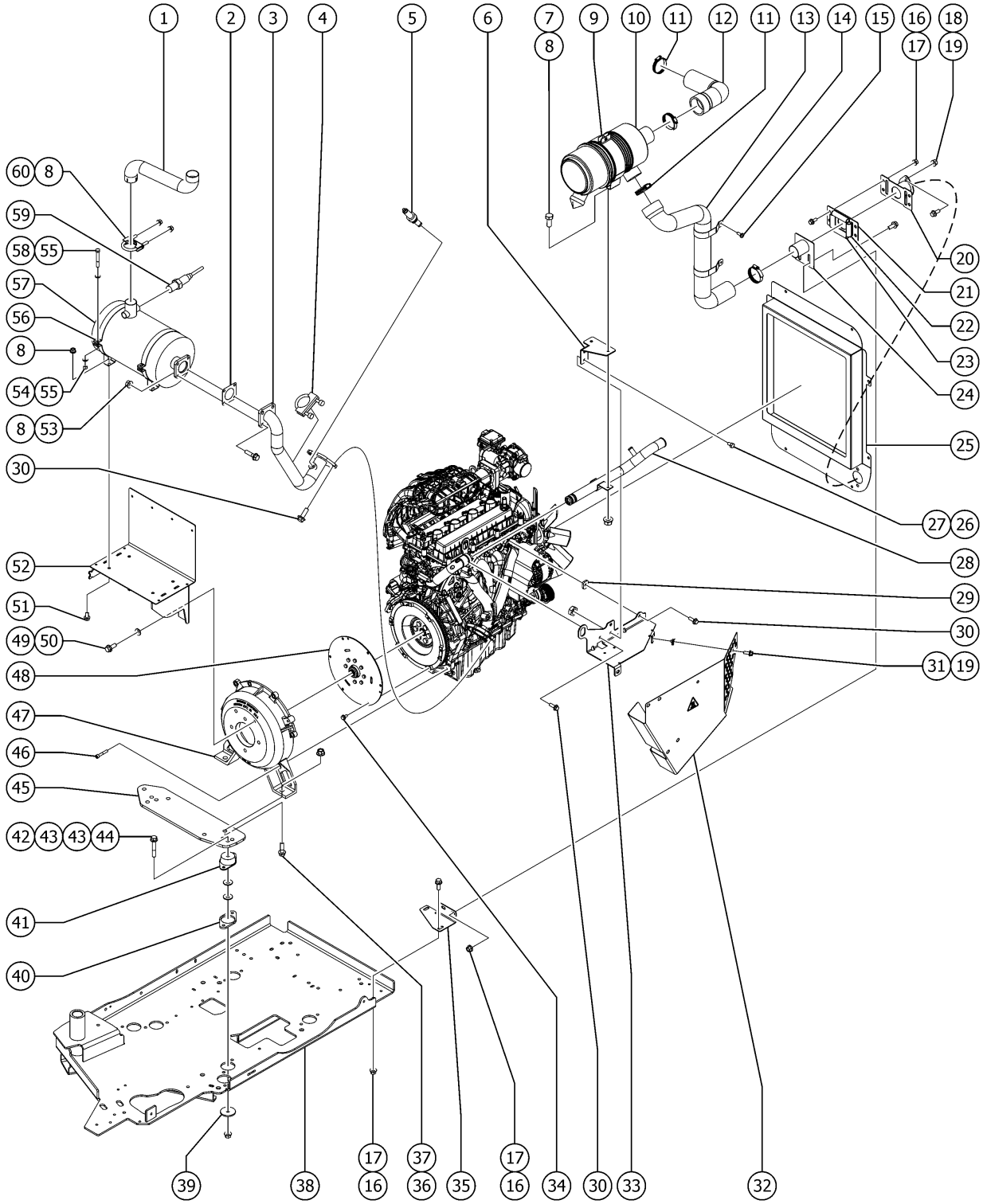

Item	Part No.	Description	Qty.
52	160540GT	WELDMENT,CAT MOUNT,MSG425	1
53	824087GT	SCREW, HHF, 5/16-18 X 1.25, 8, ZAG	4
54	824025GT	NUT,TL,3/8-16,C,ZAG	2
55	824145GT	WASHER, FLAT, DIN125, M10, ZAB	4
56	119051GT	MOUNTING BAND,MUFFLER,8.0"	2
57	215528GT	WDMT, CAT. MUFFLER, MSG425	1
58	1256848GT	SCREW,HHC,3/8-16X2.75,8,ZAG	2
59	139610GT	SENSOR,AIR,CAT MONITOR	1
60	102121GT	CLAMP,MUFFLER,1-7/8 IN.	1

506.1 Ford MSG-425 EFI, View 4

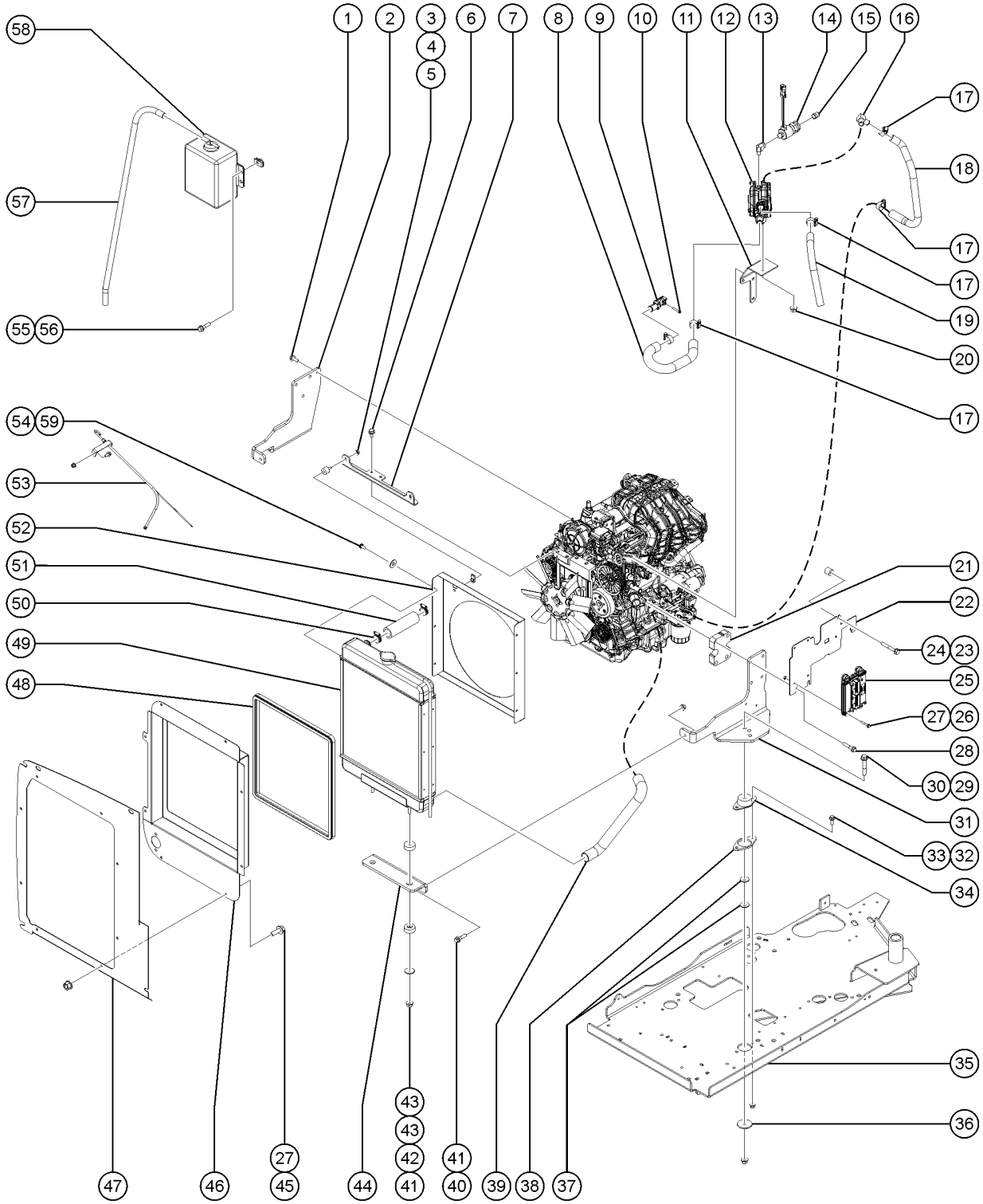

506.1 Ford MSG-425 EFI, View 4

Item	Part No.	Description	Qty.
A	236799GT	ENGINE KIT,FORD MSG425 gas/ LPS	1
1	232874GT	SCREW,HHF,M10-1.5X30,DIN6921,10.9,ZAB	4
2	236421GT	ENGINE MOUNT, RIGHT, MSG425	1
3	1257628GT	NUT,SERRATED,3/8-16,ZAG	2
4	48498GT	ISOLATOR, AIR FILTER MOUNT, 5/16-18UNC-2A	2
5	36456GT	SPRING CLIP,5/16-18,.025-.15X.83,ZAG	2
6	824134GT	SCREW,HHF,M12-1.75X30,DIN6921,10.9,ZAB LPS Only	2
6B	1251983GT	SCREW,HHF,M8-1.25X16,DIN6921,10.9,ZAB gas/ LPS	2
7	237780GT	FORMING, RAD SUPPORT, MSG425	1
8	102119GT	HOSE,3/4,LP LPS Only	1
9	215285GT	FITTING, DEPR LP, MSG425	1
10	215323GT	SHCS, M4-0.7X25MM, CL 2.9	4
11	236423GT	FORMING, LP REG MOUNT, MSG425	1
12	215284GT	REGULATOR,LP PRESSURE,MSG425	1
13	119824GT	ELBOW,90DEG,5502-04-04-B	1
14	119232GT	LOCKOFF,LP,FORD DSG/MSG	1
15	19358GT	CONNECTOR,010102-6-4 LPS Only	1
16	102074GT	ELBOW,90DEG, .63 HS X.375 MPT	1
17	46131GT	CLAMP,HOSE,.63" - 1.0" X .5" LPS Only	3
17B	46131GT	CLAMP,HOSE,.63" - 1.0" X .5" gas/ LPS	6
18	236340GT	HOSE, COOLANT, VAP, MSG425	1
19	1702GT	HOSE-HEATER,5/8 ID-BLACK	1
20	231513GT	NUT,TL FLG,M6-1.0,DIN6927,10,Z LPS Only	2
20B	237832GT	NUT,TL FLG,M8-1.25,DIN6927,10,ZAB gas/ LPS	2
21	110477GT	PLATE,ENGINE SUPPORT SPACER	1
22	236425GT	FORMING, ECU MOUNT, MSG425	1
23	1258771GT	SCREW,HHF,M8-1.25X60,DIN6921,10.9,ZAB	1
24	215421GT	SPACER, ECU, MSG425	1

506.1 Ford MSG-425 EFI, View 4

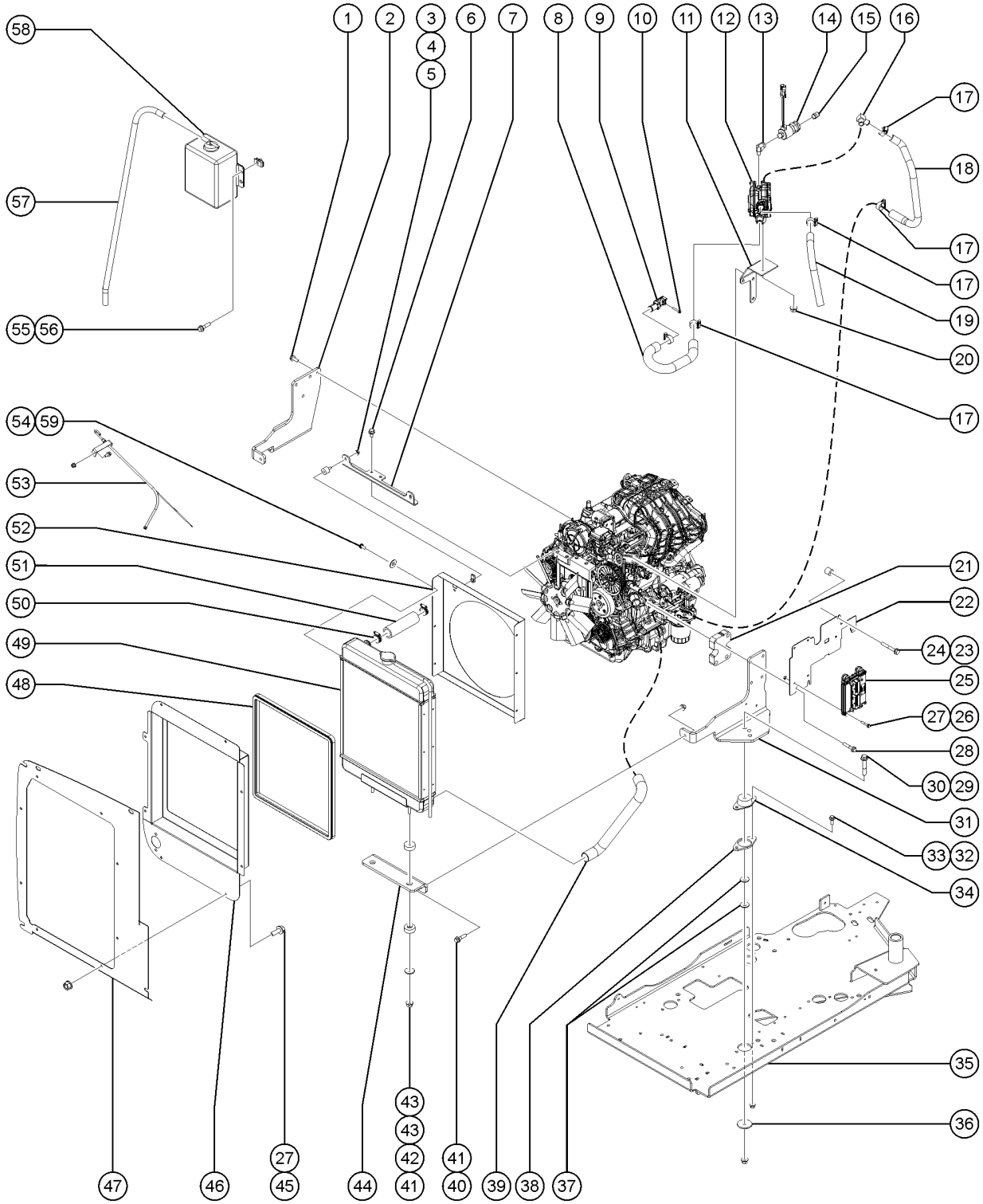

Item	Part No.	Description	Qty.
25	1294827GT	CONTROL MODULE, MSG425	1
26	824081GT	SCREW, HHF, 1/4-20 X 1.5, 8, ZAG	4
27	824027GT	NUT, TL FLG, 1/4-20, G, ZAG	12
28	1257486GT	SCREW,HHF,M10-1.5X55,DIN6921,10.9,ZAB	4
29	1295334GT	TERM QC TAB - #8 RING, .250, 45 DEG, BRASS	2
30	1274172GT	NUT,NYLOCK FLG,1/2-13,G,ZAG	2
31	236420GT	ENGINE MOUNT, LEFT, MSG425	1
32	824090GT	SCREW,HHF,3/8-16X1,8,ZAG	8
33	1274322GT	NUT,NYLOCK FLG,3/8-16,F,ZAG	8
34	70452GT	ISOLATOR,ENGINE VIBRATION	2
35		REF. WELDMENT, ENGINE TRAY (refer to 528.1)	
36	1256283GT	WASHER,FLAT,.5X2.25X.188,ZAG	2
37	1255760GT	WASHER,FLAT,1/2,USS,ZAG	4
38	216167GT	SPACER,ISOLATOR,MSG425 LPS only	2
39	236339GT	HOSE, LOWER RADIATOR, MSG425	1
40	824092GT	SCREW, HHF, 3/8-16 X 1.5, 8, ZAG	2
41	824029GT	NUT, TL FLG, 3/8-16, G, ZAG	4
42	824120GT	WASHER, FLAT, .375 X 1.50 X .125, ZAG	2
43	24038GT	SHOCK MOUNT,SMALL	4
44	110417GT	FORMING,RADIATOR SUPPORT**	1
45	1256855	SCREW,HHF,1/4-20X.625,8,ZAG	8
46	822698GT	SHROUD, RADIATOR, FORD MSG425	1
47	822695GT	BAFFLE, AIR INTAKE, S60	1
48	1257424GT	TRIM SEAL,RADIATOR,DEUTZ D2.9	1
49	110406GT	RADIATOR,FORD DSG423 & MSG425	1
49-	21465GT	CLAMP,HOSE, .25" TO .63" X .3125"	1
50	36208GT	CLAMP,HOSE,1.25***	2
51	236338GT	HOSE, UPPER RADIATOR, MSG425	1

506.1 Ford MSG-425 EFI, View 4

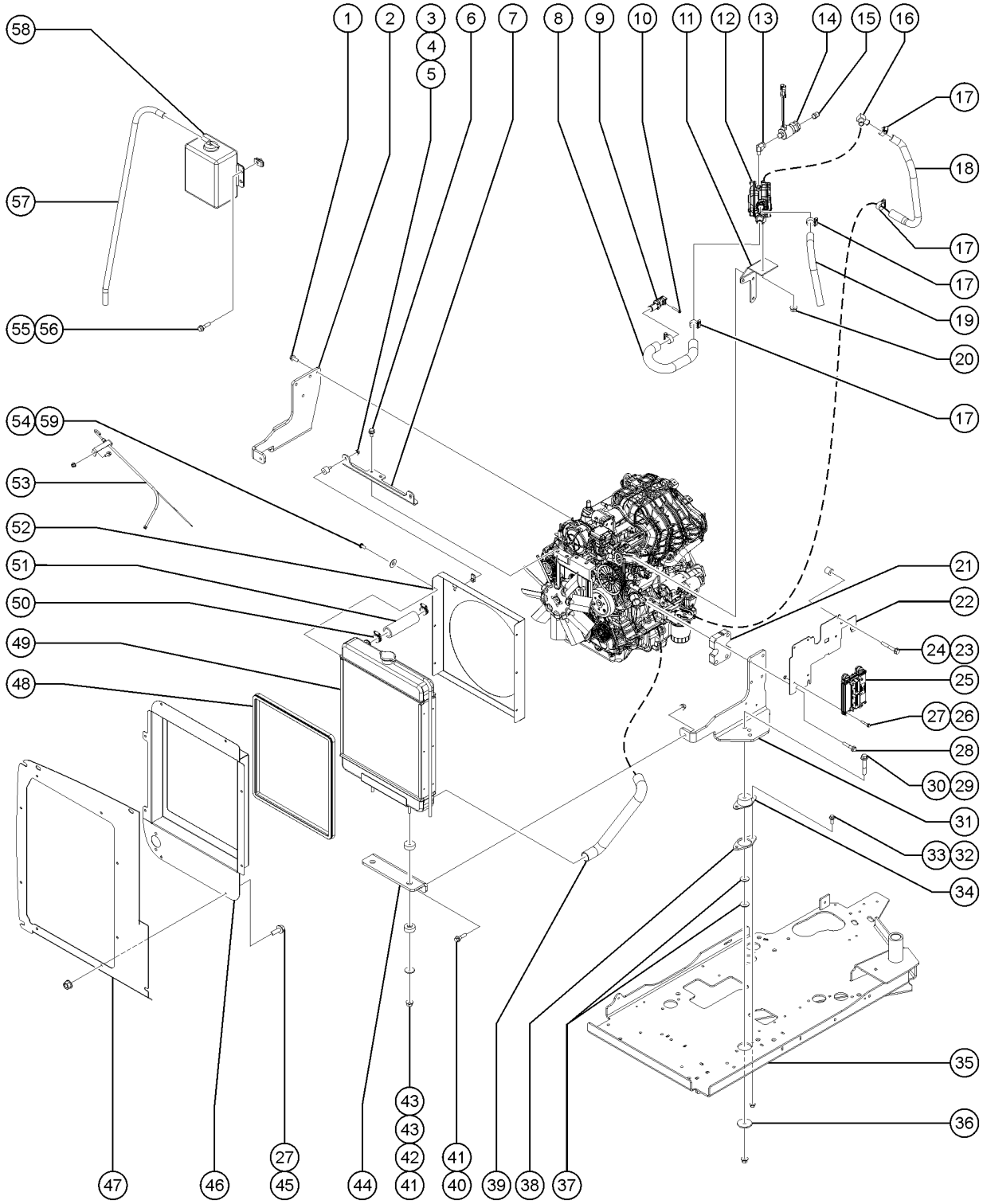

506.1 Ford MSG-425 EFI, View 4

Item	Part No.	Description	Qty.
52	236364GT	FAN SHROUD, MSG425	1
53	220229GT	KIT, DIPSTICK, MSG425	1
53-	238359GT	WDMT,DIPSTICK TUBE,MSG425	
53-	220230GT	DIPSTICK, MSG425	
53-	824028GT	NUT,TL FLG,5/16-18,G,ZAG	
53-	824085GT	SCREW, HHF, 5/16-18 X .75, 8, ZAG	
54	824220GT	SCREW,PHPM SEMS ET,10-24X.5,ZA	4
55	824078GT	SCREW,HHF,1/4-20X.75,8,ZAG	4
56	56912GT	SPRING CLIP,1/4-20,.025-.15X.54,ZAG	4
57	1259663GT	HOSE,OVERFLOW,FORD MSG425	1
58	70367GT	BOTTLE,COOLANT RECOVERY,3.7*** (includes cap)	1
58-	106226GT	TUBING,VINYL,1/2" CLEAR	
58-	21465GT	CLAMP,HOSE, .25" TO .63" X .3125" (not shown) not included with 70367, must order seperately	
58-	6833GT	CLAMP,0.50,#8 X 1/4,RUB CUSH (not shown) not included with 70367, must order seperately	
58-	72327GT	CAP, COOLANT RET SYS(54071) CAP, COOLANT RET SYS(54071)	
59	1253185GT	WASHER,FLAT,#10,USS,ZAG from SN S65XCH-45334	

507.1 Deutz TD2011L04i, View 1

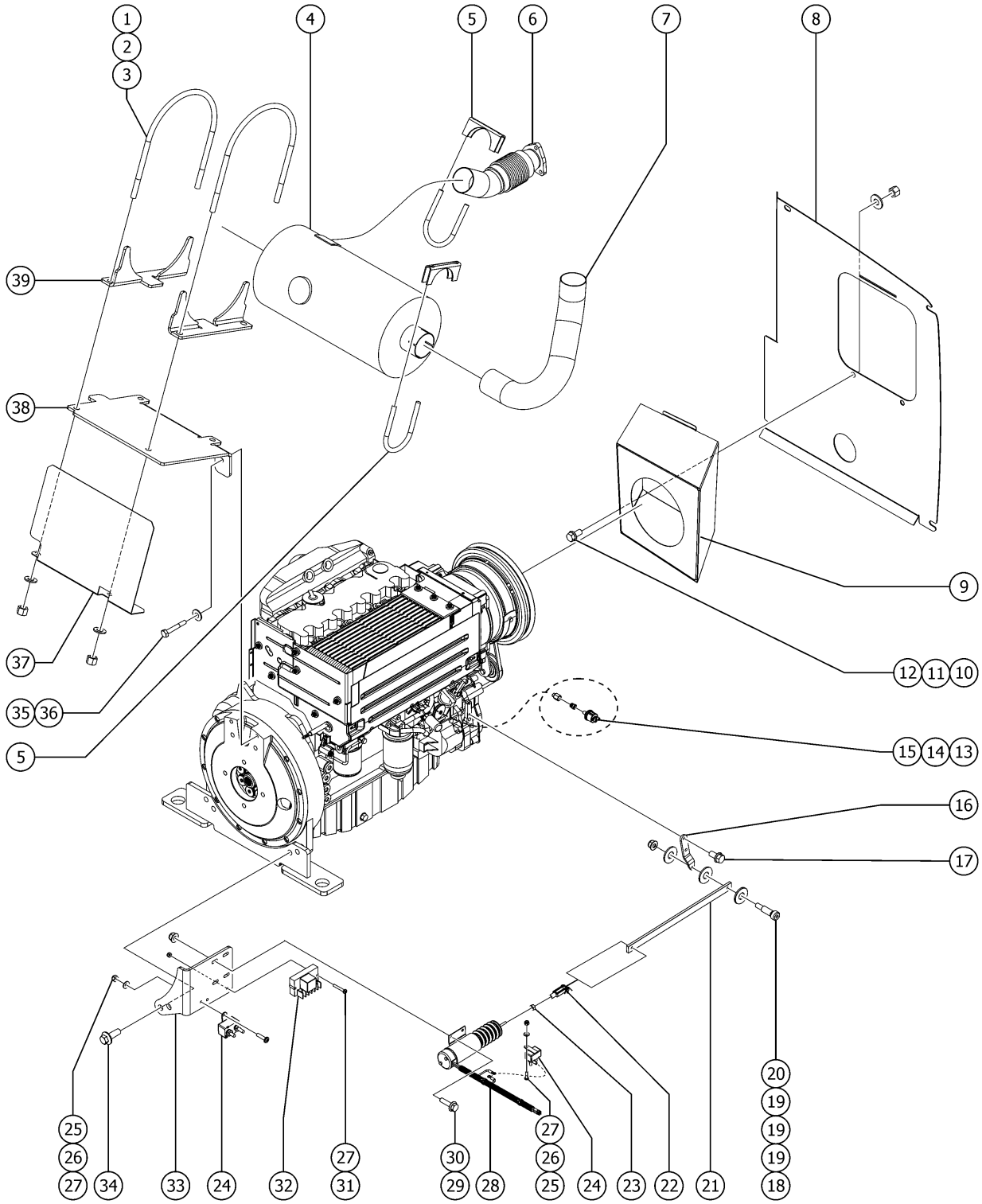

507.1 Deutz TD2011L04i, View 1

Item	Part No.	Description	Qty.
A		Ref. ENGINE,DEUTZ, TD2011L04i TPEM	
1	70449GT	U-BOLT,1/2-13 X 8.5	2
2	825353GT	WASHER,FLAT,1/2,SAE,HRD,ZAG	4
3	1274320GT	NUT,NYLOCK,1/2-13,C,ZAG	4
4	70444GT	MUFFLER,2.5"INLET/OUTLET	1
5	71911GT	CLAMP,MUFFLER, 2.50 INCH	2
6	70445GT	FLEX PIPE,EXHAUST,2.5" DIA	1
7	822514GT	TAILPIPE, DEUTZ,TPEM & ROW	1
8	110183GT	BAFFLE,AIR INTAKE S60***	1
9	128896GT	WELDMENT, AIR INTAKE BOX	1
10	824089GT	SCREW, HHF, 3/8-16 X .75, 8, ZAG	2
11	1255758GT	WASHER,FLAT,3/8,USS,ZAG	2
12	824025GT	NUT,TL,3/8-16,C,ZAG	2
13	30810GT	SENDING UNIT,OIL PRESSURE***	1
14	106033GT	ADAPTER,NPT 6-4	1
15	106034GT	ADAPTER,M18	1
16	50787GT	LEVER,GOVERNOR ACTUATOR**	1
17	237238GT	SCREW,HHF,M6-1.0X12,DIN6921,10	2
18	1257076GT	BOLT,SHS,1/4-28X4,ZAG	1
19	824113GT	WASHER,FLAT,USS,1/4,ZAG	3
20	1283004GT	NUT,NYLOCK FLG,10-24,A,ZAG	1
21	139322GT	THROTTLE LINKAGE, DSL	1
22	21130GT	CLEVIS YOKE-1/4-28,PLTD W/PIN	1
23	824041GT	NUT, 1/4-28, 8, ZAG	1
24	128829GT	CIRCUIT BRKR 15A TYPE 2 METAL	2
25	49816GT	SCREW,PHILLIPS,PHM,10-32 X .75	2
26	6146GT	WASHER,FLAT,MS,#10,Y	2
27	6178GT	NUT, NYLOCK, 10-32	4

507.1 Deutz TD2011L04i, View 1

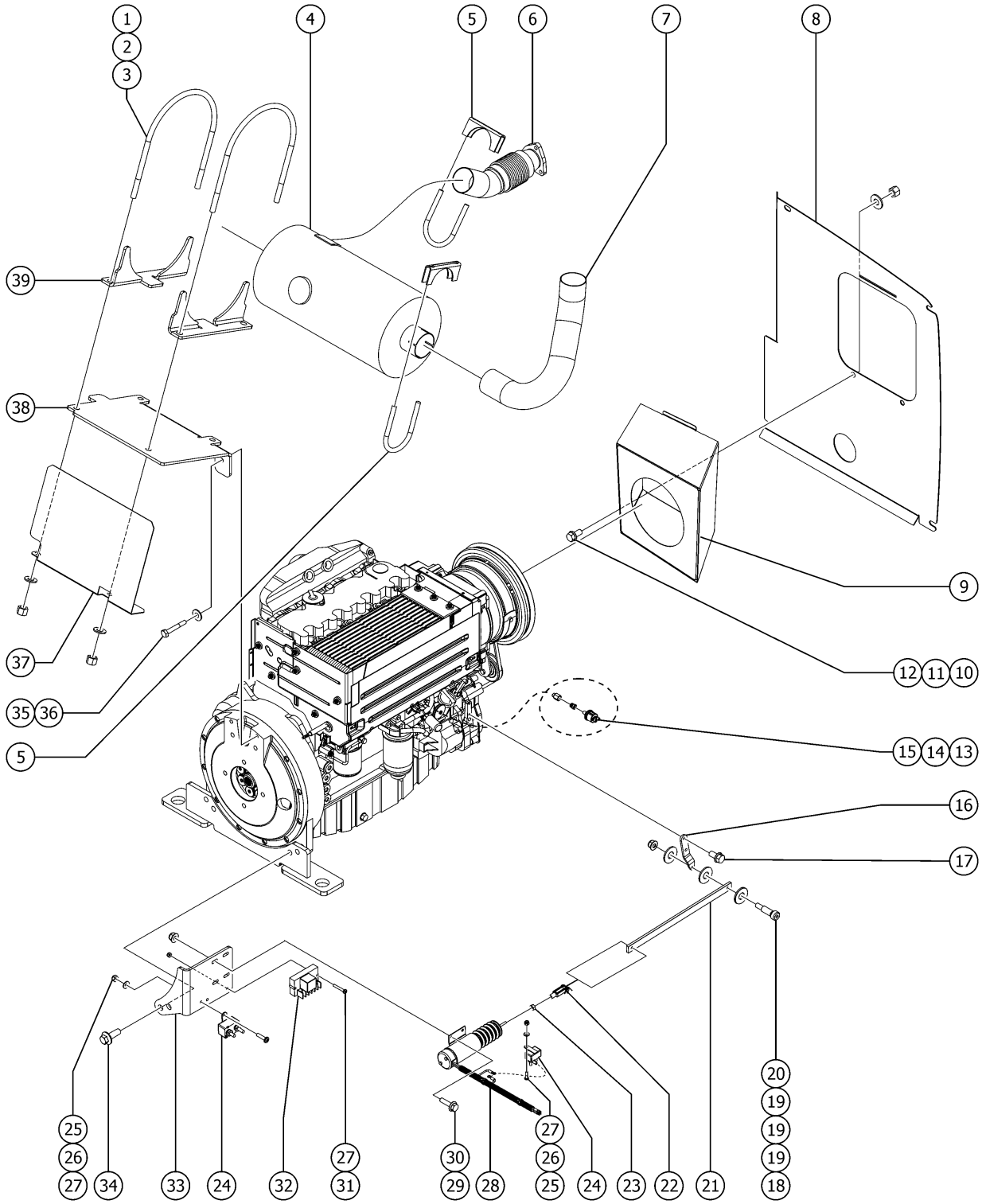

507.1 Deutz TD2011L04i, View 1

Item	Part No.	Description	Qty.
28	121615GT	THROTTLE SOLENOID ASSY, TROMB.	
28-	89998GT	KIT,SERVICE,SOLENOID MODULE	1
29	824078GT	SCREW,HHF,1/4-20X.75,8,ZAG	4
30	1277924GT	NUT,NYLOCK FLG,1/4-20,F,ZAG	4
31	49817GT	SCREW,PHILLIPS,PHM,10-32 X1.25	2
32	89997GT	RELAY MODULE(89996,89998)	1
33	139321GT	FORMING, SOLENOID MOUNT***	1
34	1251899GT	SCREW,HHF,M14-2.0 X 40,DIN 6921,10.9, ZAB	2
35	1257706GT	SCREW,HHC,M10-1.5X70,DIN931,10	2
36	824145GT	WASHER, FLAT, DIN125, M10, ZAB	2
37	102237PGT	FORMING,HEAT SHIELD,MUFFLER	1
38	70448GT	FORMING,MUFFLER MOUNT***	1
39	70483GT	FORMING,8.5' MUFFLER MOUNT	2

508.1 Deutz TD2011L04i, View 2

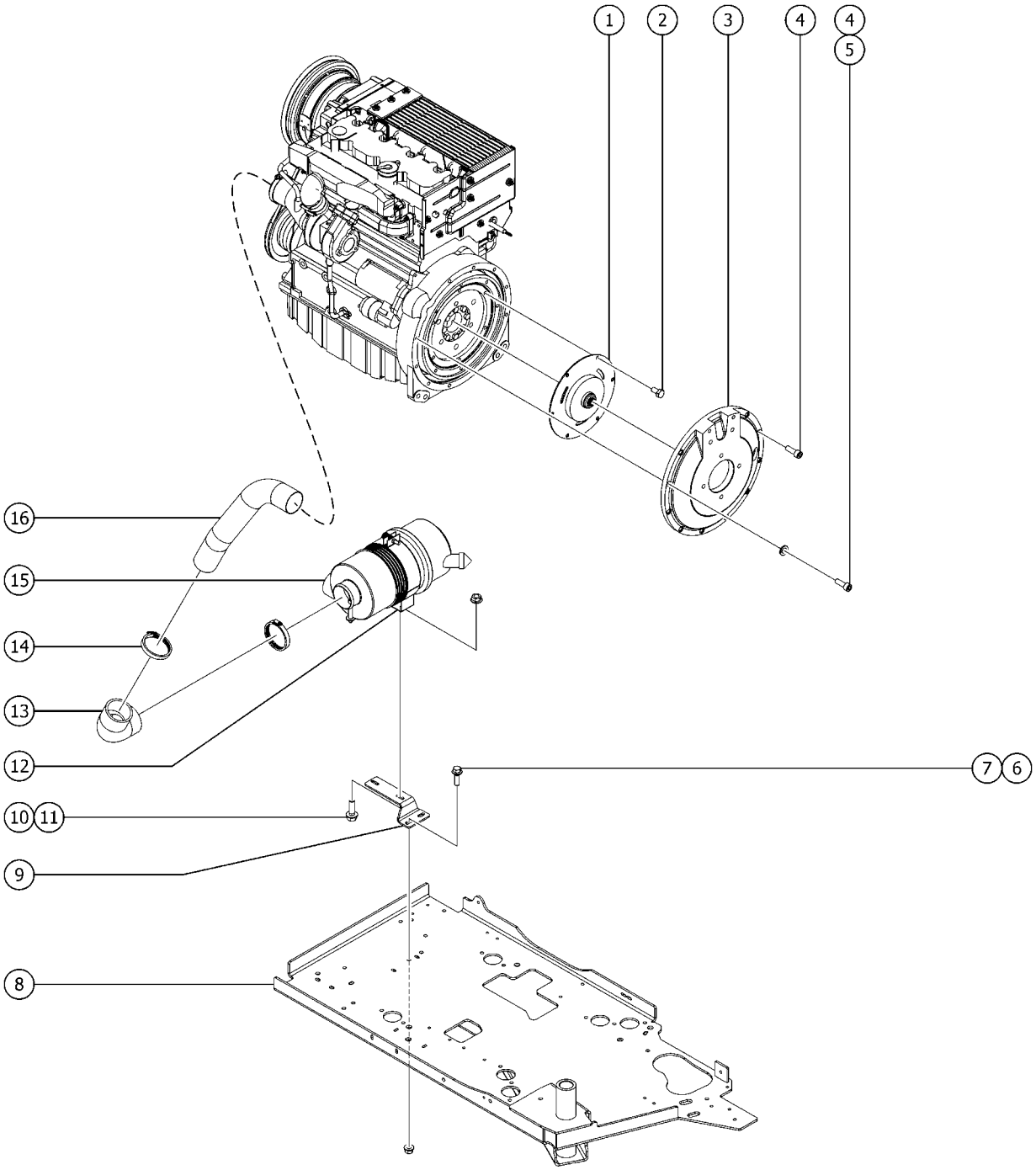

508.1 Deutz TD2011L04i, View 2

Item	Part No.	Description	Qty.
1	128004GT	COUPLER,15 TOOTH,FBA,SAE8***	1
2	825351GT	SCREW,HHC,M10-1.5X20,DIN933,10.9,ZAB	6
3	70381GT	COVER,FLYWHEEL CASTING	1
4	1255666GT	SCREW,SHC,M10-1.5X30,DIN912,12.9,ZAB	9
5	824142GT	WASHER,LOCK,M10,ZAB	1
6	824091GT	SCREW, HHF, 3/8-16 X 1.25, 8, ZAG	2
7	824029GT	NUT, TL FLG, 3/8-16, G, ZAG	2
8		REF. WELDMENT, ENGINE TRAY (Refer to 528.1)	
9	102209GT	FORMING,AIR CLEANER MOUNT**	1
10	824086GT	SCREW, HHF, 5/16-18 X 1, 8, ZAG	2
11	1255805GT	NUT,SERRATED,5/16-18,8,ZAG	2
12	81468GT	MOUNTING BAND,AIR CLEANER	1
13	139455GT	ELBOW,AIR INTAKE,RUBBER	1
14	30489GT	CLAMP,HOSE,3.50	2
15	81467GT	AIR CLEANER,NELSON	1
15-	52866GT	EVACUATOR VALVE-AIR CLEANER (for 81467)	
15-	62425GT	FILTER,AIR CLEANER, SUPERBOOM (for 81467)	
15-	75450GT	AIR CLEANER CLIPS, SUPERBOOM (for 81467)	
15-	75451GT	AIR CLEANER COVER, SUPERBOOM* (for 81467)	
16	102227GT	TUBE,AIR INTAKE	1

509.1 Deutz TD2011L04i, View 3

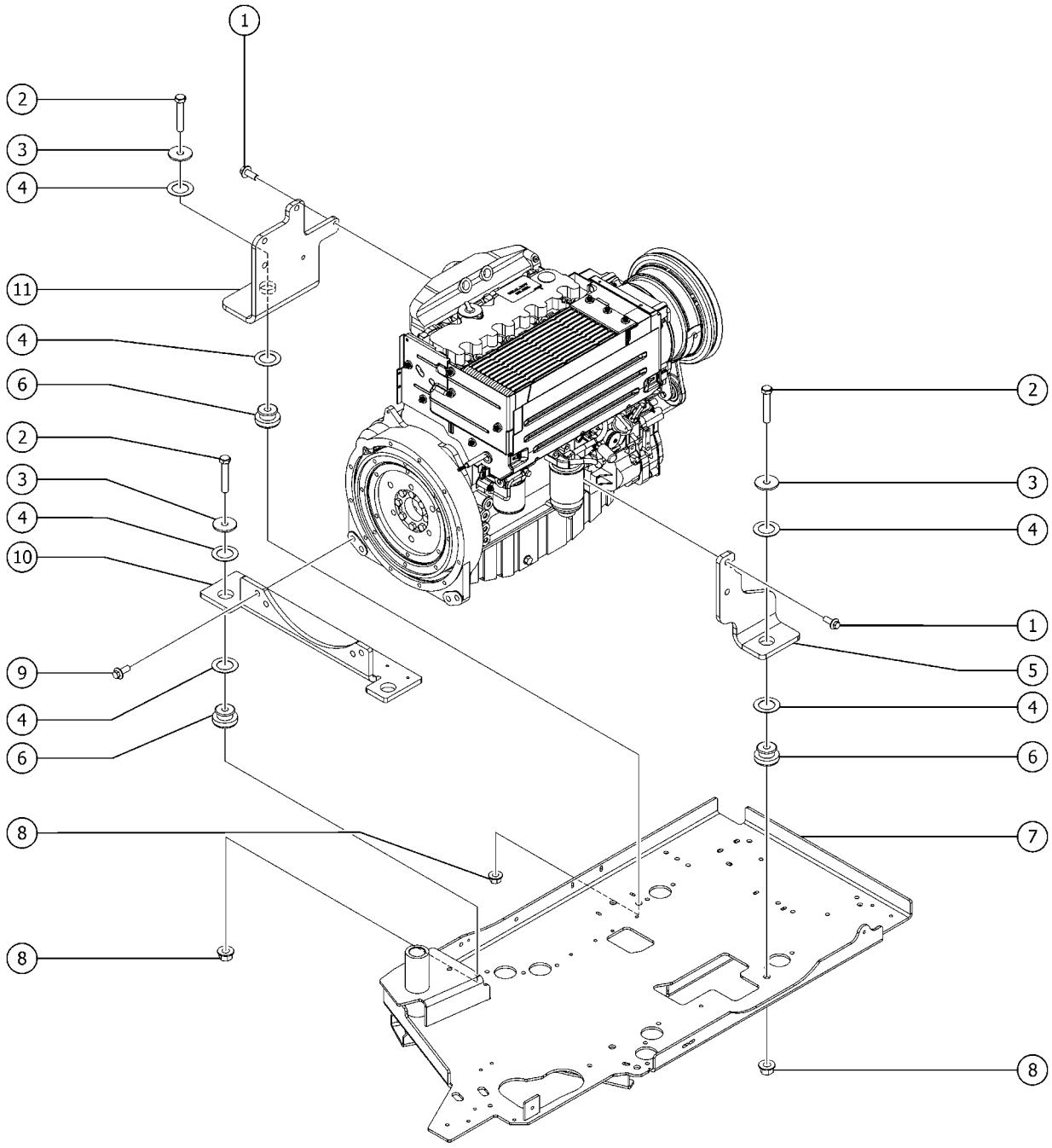

509.1 Deutz TD2011L04i, View 3

Item	Part No.	Description	Qty.
1	1256776GT	SCREW,HHF,M14-2.0X35,DIN6921,10.9,ZAB	5
2	1256169GT	SCREW,HHC,5/8-11X3.5,8,ZAG	4
3	824123GT	WASHER,FLAT,.625X2.25X.188,ZAG	4
4	824151GT	WASHER,SHIM,1.270X2.130X.062,Z	8
5	70455GT	FORMING,ENGINE MOUNT	1
6	102045GT	ISOLATOR,ENGINE VIBRATION	4
7		REF. WELDMENT, ENGINE TRAY (refer to 528.1)	1
8	1283007GT	NUT,NYLOCK FLG,5/8-11,F,ZAG	4
9	1251899GT	SCREW,HHF,M14-2.0 X 40,DIN 6921,10.9, ZAB	4
10	160517GT	FORMING,ENGINE MOUNT,DEUTZ	1
11	70454GT	FORMING,ENGINE MOUNT	1

510.1 Deutz TD2011L04i, View 4

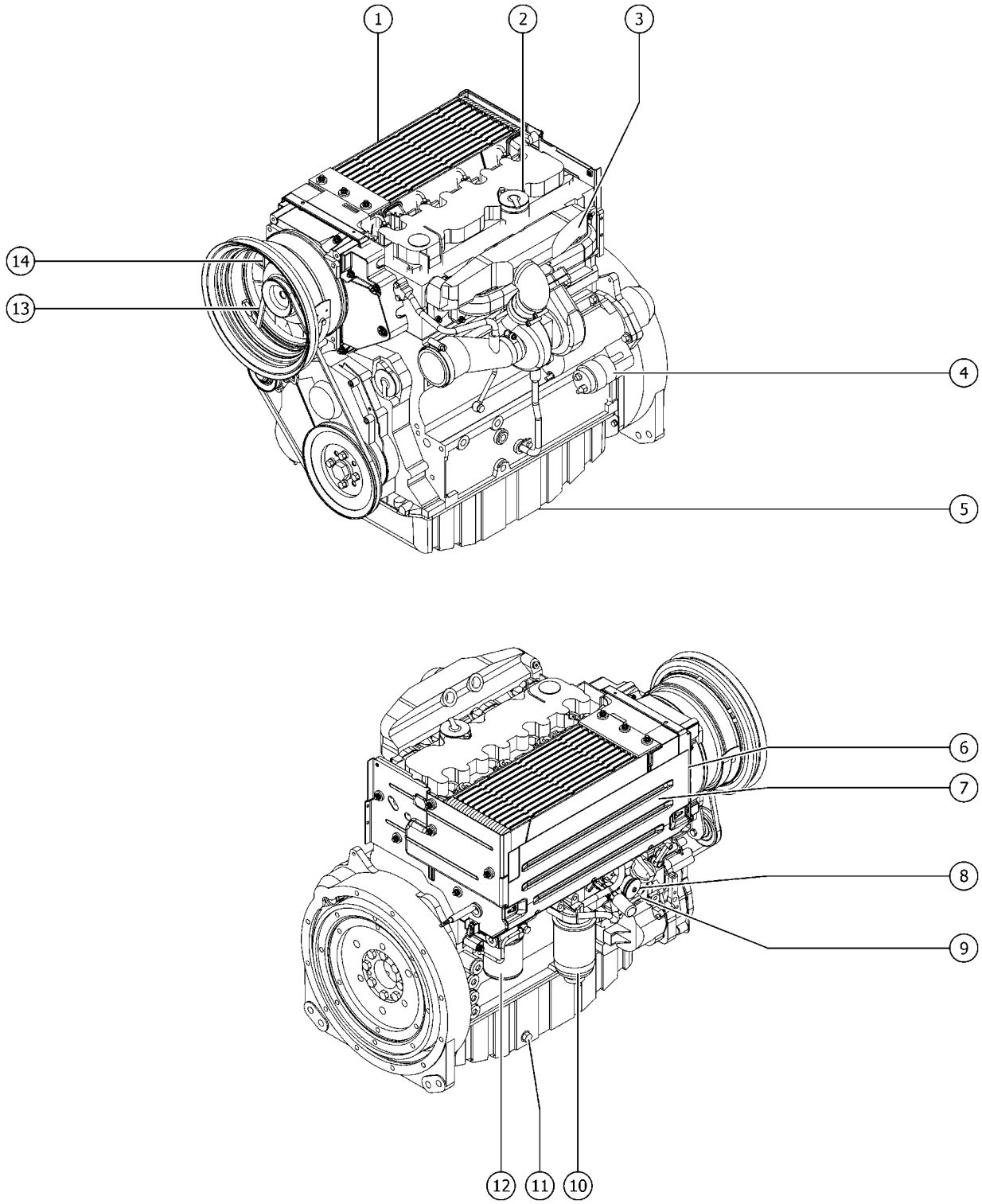

510.1 Deutz TD2011L04i, View 4

Item	Part No.	Description	Qty.
1		Ref. ENGINE,DEUTZ, TD2011L04i TPEM	1
2	29557GT	CAP,OIL FILLER,DEUTZ,DIESEL***	1
3	102590GT	EXHAUST MANIFOLD, DEUTZ F4L201	1
3-	29559GT	GASKET,EXHAUST	
4	49915GT	SOLENOID-STARTR DEUTZF4L1011F*	1
5	102586GT	OIL PAN,DEUTZ F4L2011	1
6	1289103GT	COVER,ENGINE,TD2011 L04I	1
7	111445GT	SENDING UNIT,OIL TEMP SWCH,DTZ	1
8	30810GT	SENDING UNIT,OIL PRESSURE***	
8-	106033GT	ADAPTER,NPT 6-4	
8-	106034GT	ADAPTER,M18	
9	52352GT	DIPSTICK-F3L1011F (DEUTZ)	
10	29560GT	FILTER,FUEL/WTR SEP, DTZ 1008 Genie Genuine Part. See PN 1254826 for compatible aftermarket replacement.	1
10A-	58566GT	FILTER HEAD (29560)	
10B	1254826GT	FUEL FILTER W/SEP,DEUTZ,1008 Genie Aftermarket Part.	1
11	102587GT	PLUG,ENGINE OIL,DEUTZ F4L2011	
12	49924GT	FILTER,OIL,DEUTZ Genie Genuine Part. See PN 1255653 for compatible aftermarket replacement.	
12B	1255653GT	FILTER,OIL,DEUTZ,REPLACEMENT Genie Aftermarket Part. Compatible with Genie Genuine Part 49924.	
13	58630GT	V-BELT, DEUTZ TD2011LOAI	
14	58249GT	ALTERNATOR, DEUTZ,BF4L2011***	

511.1 Deutz D2.9L4, View 1

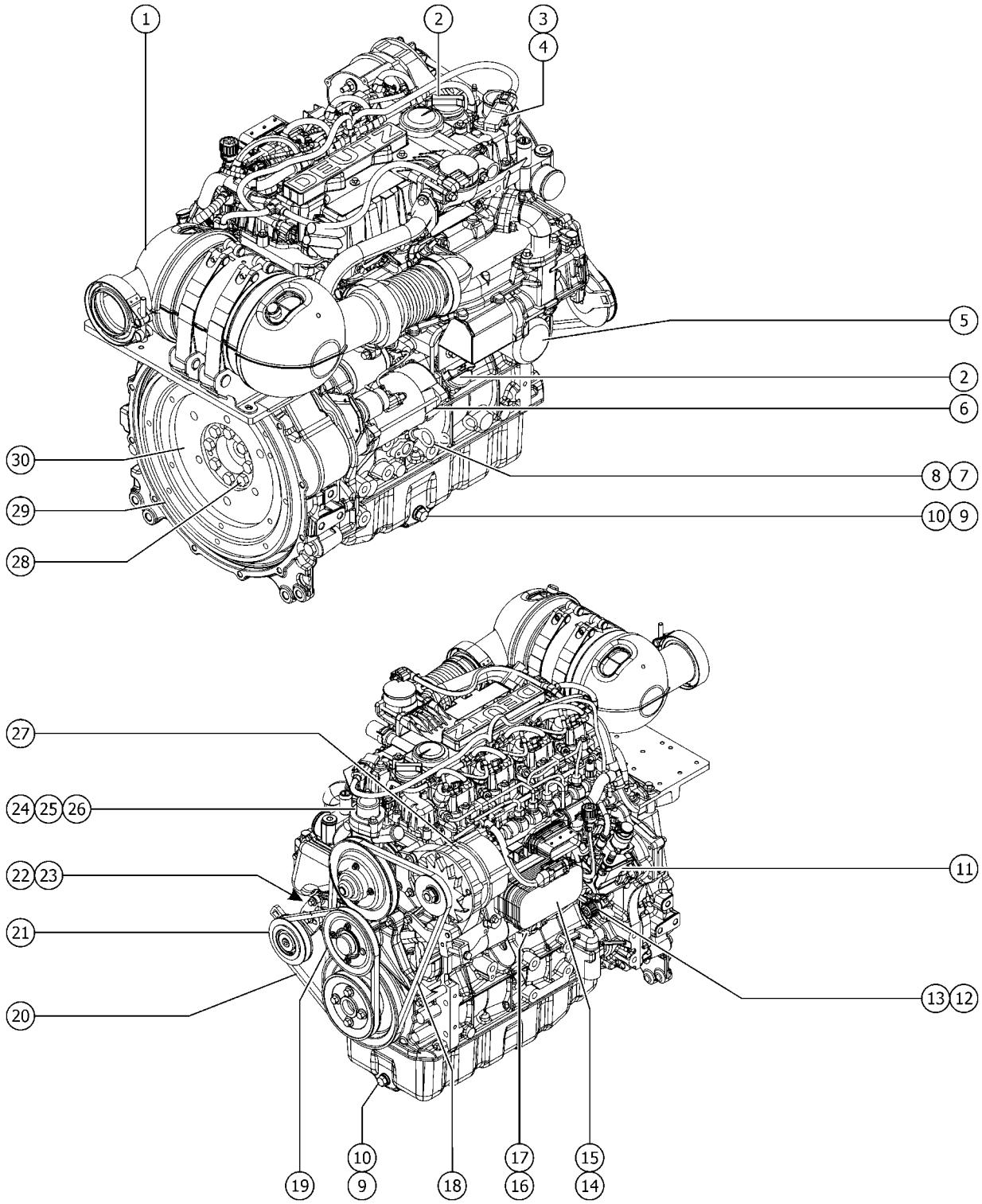

511.1 Deutz D2.9L4, View 1

Item	Part No.	Description	Qty.
A	1262870GT	GLOW PLUG, DEUTZ	4
B	1262871GT	SEAL, FRONT ENGINE,DEUTZ	1
C	1262872GT	SEAL, REAR ENGINE,DEUTZ	1
D	1272624GT	KIT,WATER PUMP 2.9 L4 includes fasteners and 1262874 pump	1
E	1289895GT	WASHER,WATER PUMP (1272624) for 1272624	
F	1262875GT	O-RING, WATER PUMP	1
F-	1259654GT	INTAKE BREATHER	1
G	1259899GT	HARNESS, ENGINE, DEUTZ TD2.9	1
H	1277974GT	PINS,CONNECTOR,INJ HARNESS,D2.9	
1		OXIDATION CATALYST,DEUTZ (DEUTZ OXIDATION CATALYST/MUFFLER)(contact Genie Parts; engine serial number required)	1
2	29557GT	CAP,OIL FILLER,DEUTZ,DIESEL***	2
3	1262896GT	SENSOR,INTAKE AIR PRESSURE	1
4	1262897GT	O-RING, INTAKE AIR PRESSURE SENSOR	1
5	49924GT	FILTER,OIL,DEUTZ Genie Genuine Part. See PN 1255653 for compatible aftermarket replacement.	1
5B	1255653GT	FILTER,OIL,DEUTZ,REPLACEMENT Genie Aftermarket Part. Compatible with Genie Genuine Part 49924.	
6	1254594GT	STARTER,3.2KW,DEUTZ D2.9	1
6-	1262868GT	BOLT, DEUTZ STARTER not included sold seperately	
6B	825939GT	FORMING, CLAMP, BATTERY CABLE	
6B	78736GT	CLAMP,2 HOSE,PLASTIC for 825939	
7	825708GT	DIPSTICK,TD2.9	1
8	1262881GT	ORING, OIL DIP STICK	1
9	102587GT	PLUG,ENGINE OIL,DEUTZ F4L2011	2
10	108538GT	RING / SEALING	2
11	1279653GT	PUMP,FUEL,HI PRESS,DEUTZ TD2.9	1
12	1262894GT	SENSOR,CAM/CRANKSHAFT POSITION (crankshaft)	1
13	1262895GT	O-RING, CRANKSHAFT POSITION SENSOR	1
14	1260357GT	OIL COOLER,TD2.9	1
15	1262883GT	GASKET, OIL COOLER, DEUTZ	1

511.1 Deutz D2.9L4, View 1

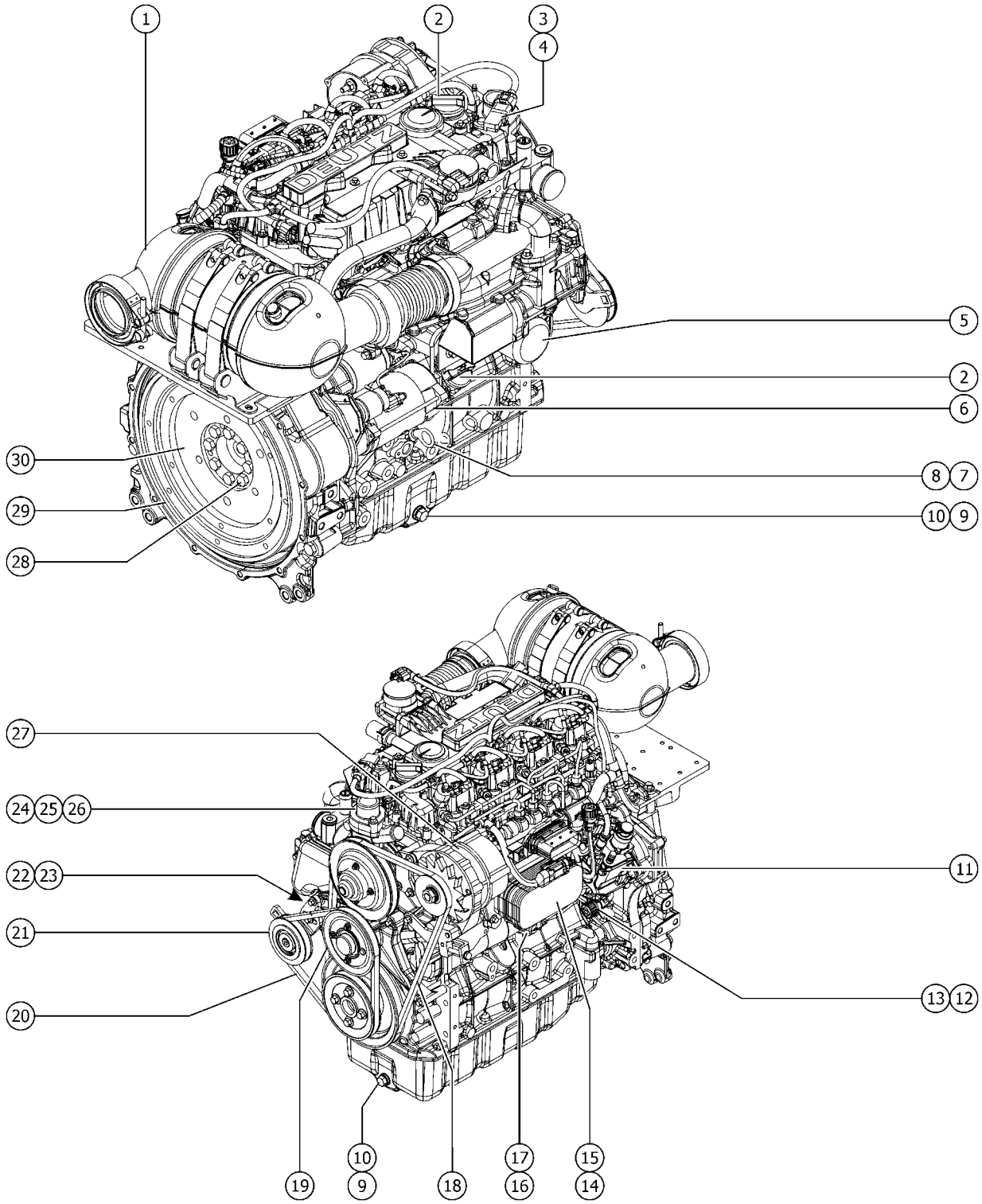

511.1 Deutz D2.9L4, View 1

Item	Part No.	Description	Qty.
16	824673GT	SENSOR,LOW PRESSURE,DEUTZ 2.9L (oil pressure sensor)	1
17	1262893GT	O-RING, OIL PRESSURE SENSOR	1
18	1262866GT	FAN BELT, ALTERANTOR	1
19	236248GT	PULLEY ASSEMBLY,ALTERNATOR,TCD	1
20	1262867GT	V-BELT, DEUTZ	1
21	1279631GT	PULLEY,BELT TENSIONER,D2.9L4	1
22	1262894GT	SENSOR,CAM/CRANKSHAFT POSITION hidden from view (camshaft)	1
23	1262899GT	O-RING, CAMSHAFT POSITION SENSOR hidden from view	1
24	1262877GT	THERMOSTAT HOUSING	1
25	1262876GT	THERMOSTAT,DEUTZ	1
26	1262878GT	GASKET, THERMOSTAT HOUSING	1
27	236251GT	ALTERNATOR,95 AMP,DEUTZ TCD3.6	1
28	1262873GT	BOLT, DEUTZ FLYWHEEL	8
29	89785GT	RING GEAR,DEUTZ F3L2011F	1
30	1259660GT	FLYWHEEL, SAE 8/10 order with item #28, PN 1262873, qty 8	1

512.1 Deutz D2.9L4, View 2

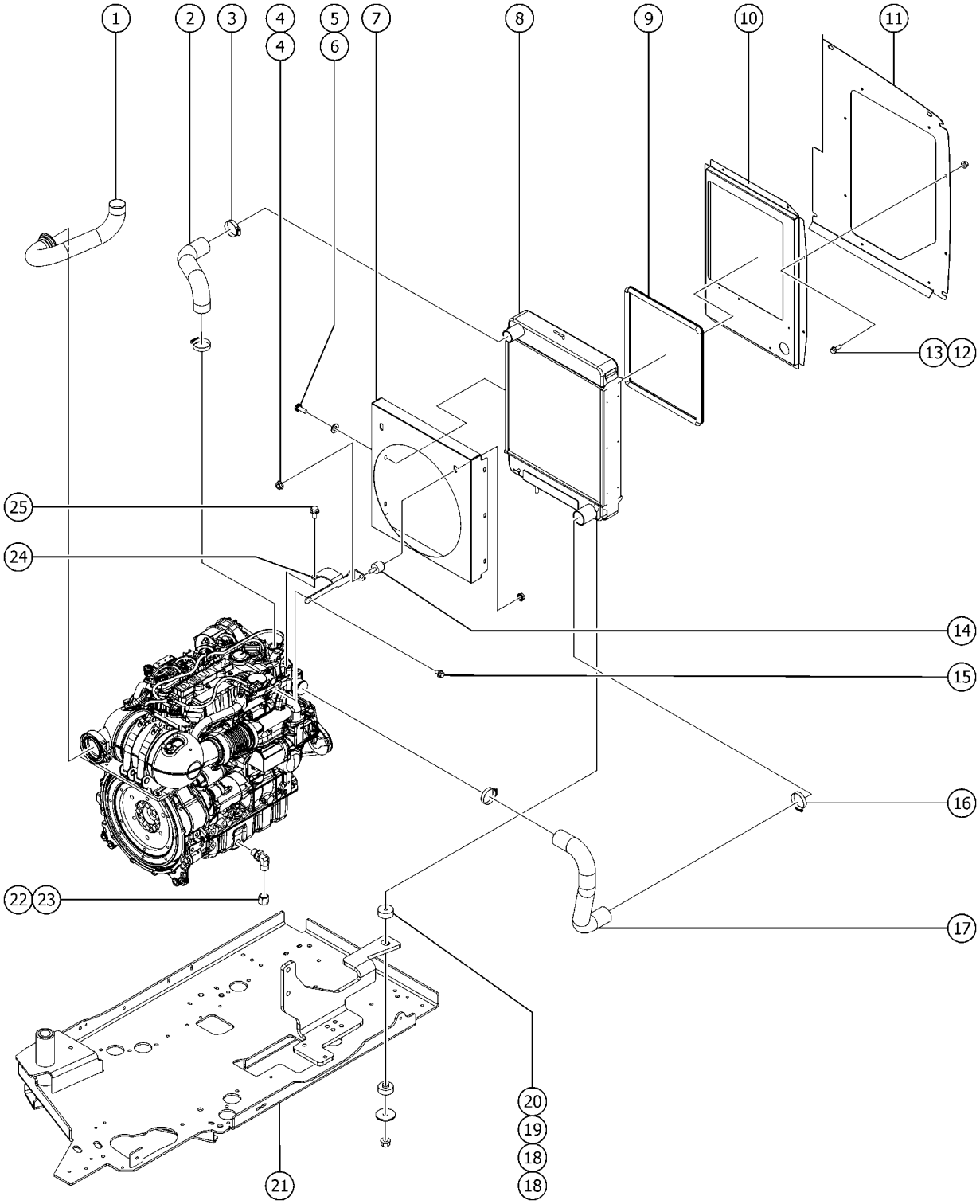

512.1 Deutz D2.9L4, View 2

Item	Part No.	Description	Qty.
1	822694GT	WDMT,TAILPIPE,DEUTZ D2.9 T4	1
2	237193GT	HOSE,UPPER RADIATOR,DEUTZ D2.9	1
3	22672GT	CLAMP,HOSE,1.75	2
4	1256679GT	NUT,SERRATED,1/4-20,8,ZAG	2
5	824220GT	SCREW,PHPM SEMS ET,10-24X.5,ZA	6
6	1253185GT	WASHER,FLAT,#10,USS,ZAG	6
7	237192GT	FAN SHROUD,DEUTZ D2.9	1
8	214685GT	RADIATOR, CAPLESS, DEUTZ D 2.9	1
9	1257424GT	TRIM SEAL,RADIATOR,DEUTZ D2.9	1
10	822696GT	SHROUD, RADIATOR, DEUTZ 2.9	1
11	822695GT	BAFFLE, AIR INTAKE, S60	1
12	824078GT	SCREW,HHF,1/4-20X.75,8,ZAG	8
13	824027GT	NUT, TL FLG, 1/4-20, G, ZAG	8
14	219437GT	ISOLATOR,VIBRATION	1
15	237238GT	SCREW,HHF,M6-1.0X12,DIN6921,10	1
16	35434GT	CLAMP,HOSE,2.00***	2
17	237194GT	HOSE,LOWER RADIATOR,DEUTZ D2.9	1
18	24038GT	SHOCK MOUNT,SMALL	4
19	824120GT	WASHER, FLAT, .375 X 1.50 X .125, ZAG	2
20	824029GT	NUT, TL FLG, 3/8-16, G, ZAG	2
21		Ref. WELDMENT, ENGINE TRAY refer to 528.1	
22	69775GT	CAP, 520112-8	1
23	54428GT	FITTING, HYDRUALIC, 90DEG, O-RING	1
24	214237GT	FORMING,RAD BRACE,DEUTZ D2.9	1
25	1251983GT	SCREW,HHF,M8-1.25X16,DIN6921,10.9,ZAB	1

513.1 Deutz D2.9L4, View 3

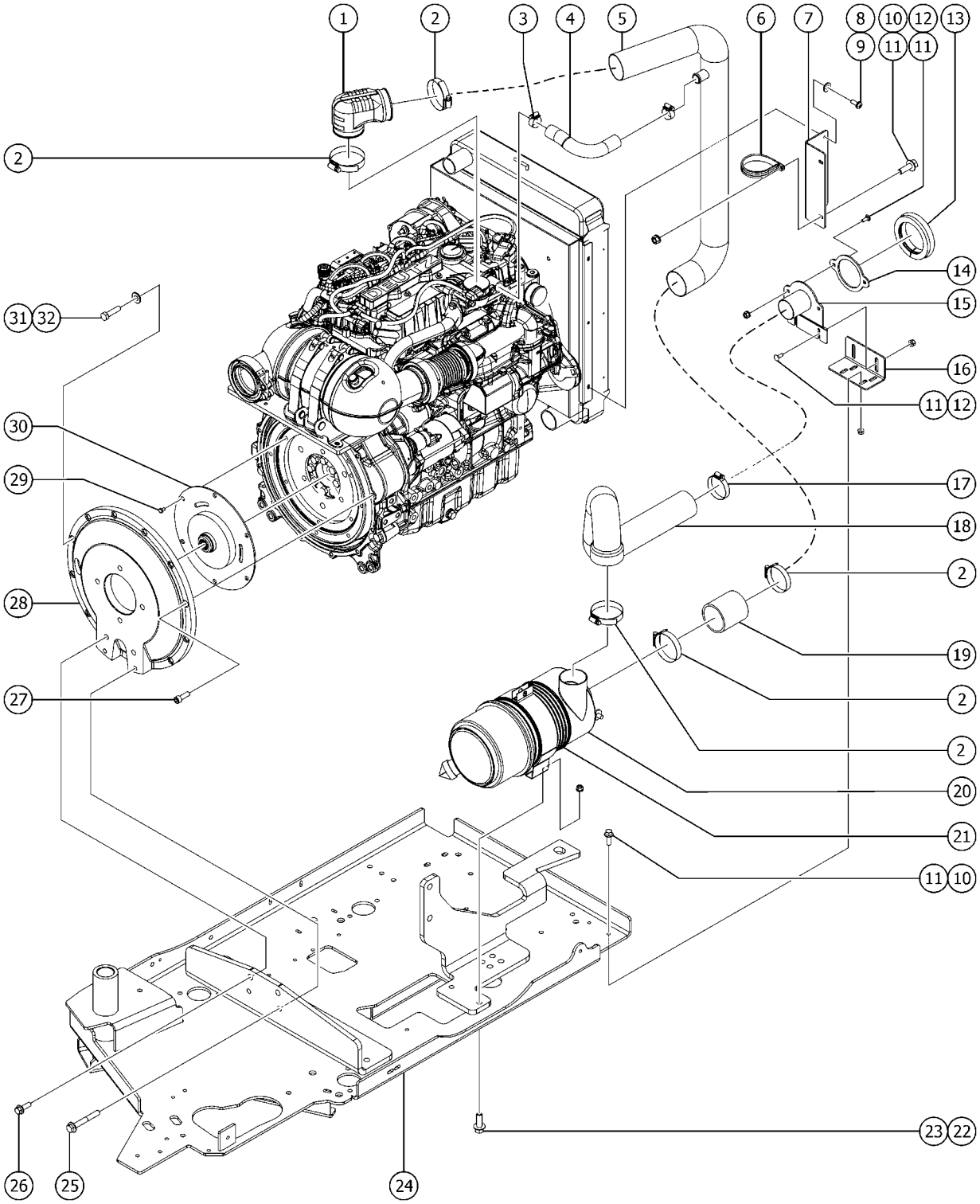

513.1 Deutz D2.9L4, View 3

Item	Part No.	Description	Qty.
A	237188GT	ENGINE KIT, DEUTZ D2.9L4 Due to Tier 4 regulations, many engine replacement parts require the engine serial number at time of order placement. When ordering engine parts please have both machine and engine serial numbers available. For internal engine parts, contact engine dealer	
1	214686GT	AIR INTAKE ELBOW, 90 DEGREE	1
2	45435GT	CLAMP,HOSE,2.50"	5
3	30348GT	CLAMP,HOSE,1.00	2
4	1255894GT	HOSE,PCV,DEUTZ D2.9	1
5	219976GT	WELDMENT,STEEL INTAKE TUBE	1
6	45455GT	CLAMP,2.75,#44 X 1/4,RUB CUSH*	2
7	217877GT	FORMING,CLEAN AIR BRACKET	1
8	824220GT	SCREW,PHPM SEMS ET,10-24X.5,ZA	3
9	1253185GT	WASHER,FLAT,#10,USS,ZAG	3
10	824078GT	SCREW,HHF,1/4-20X.75,8,ZAG	4
11	824027GT	NUT, TL FLG, 1/4-20, G, ZAG	8
12	824124GT	BOLT, CARRIAGE, 1/4-20 X .75, 5, ZAG	4
13	1262842GT	SEAL,AIR INTAKE ADAPTER,LOWER	1
14	1273081GT	SHEET,AIR SEAL BACKING	1
15	1272965GT	WELDMENT, ADAPTER, INTAKE	1
16	1272967GT	FORMING, ADAPTER, INTAKE	1
17	35434GT	CLAMP,HOSE,2.00***	1
18	217930GT	HOSE,RAW AIR,DEUTZ D2.9	1
19	34162-300GT	HOSE,AIR INTAKE 2.50" ID	1
20	63463GT	AIR CLEANER,NELSON*** this is the all plastic housing type, for the metal type housing air filter assembly see PN 27915	1
20-	52866GT	EVACUATOR VALVE-AIR CLEANER	
20-	58415GT	CLIP,AIR CLEANER END CAP***	
20-	62420GT	FILTER, AIR D2.9L4	
20-	65810GT	BAFFLE, AIR CLEANER (27915)** dust cap	
21	53952GT	BRKT,AIR CLEANER ORIENTATION**	1
22	824086GT	SCREW, HHF, 5/16-18 X 1, 8, ZAG	2

513.1 Deutz D2.9L4, View 3

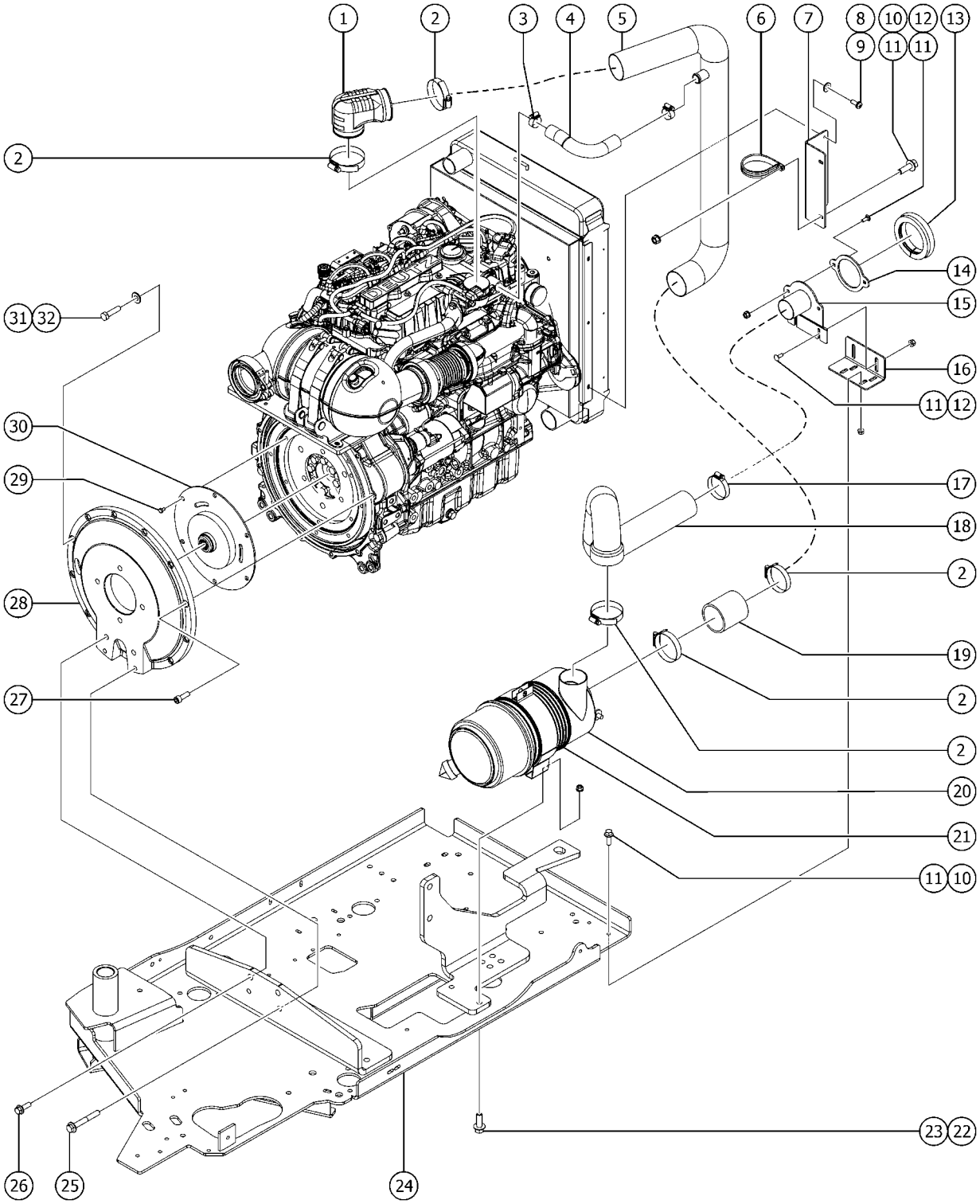

513.1 Deutz D2.9L4, View 3

Item	Part No.	Description	Qty.
23	824028GT	NUT,TL FLG,5/16-18,G,ZAG	2
24		Ref. ENGINE TRAY refer to 528.1	
25	826008GT	SCREW,HHF,M10-1.5X75,DIN6921,10.9,ZAB	2
26	1253498GT	SCREW,HHF,1/2-13X1.5,8,ZAG	2
27	1255666GT	SCREW,SHC,M10-1.5X30,DIN912,12.9,ZAB	9
28	70381GT	COVER,FLYWHEEL CASTING	1
29	1257421GT	SCREW,HHC,M10-1.5X16,DIN933,10	6
30	128004GT	COUPLER,15 TOOTH,FBA,SAE8*** includes 8 bolts	1
31	25548GT	SCREW,HHC,M10 X 40MM,GRD8	1
32	22699GT	WASHER, FLAT, M10, ZINC PLTD.	1

514.1 Deutz D2.9L4, View 4

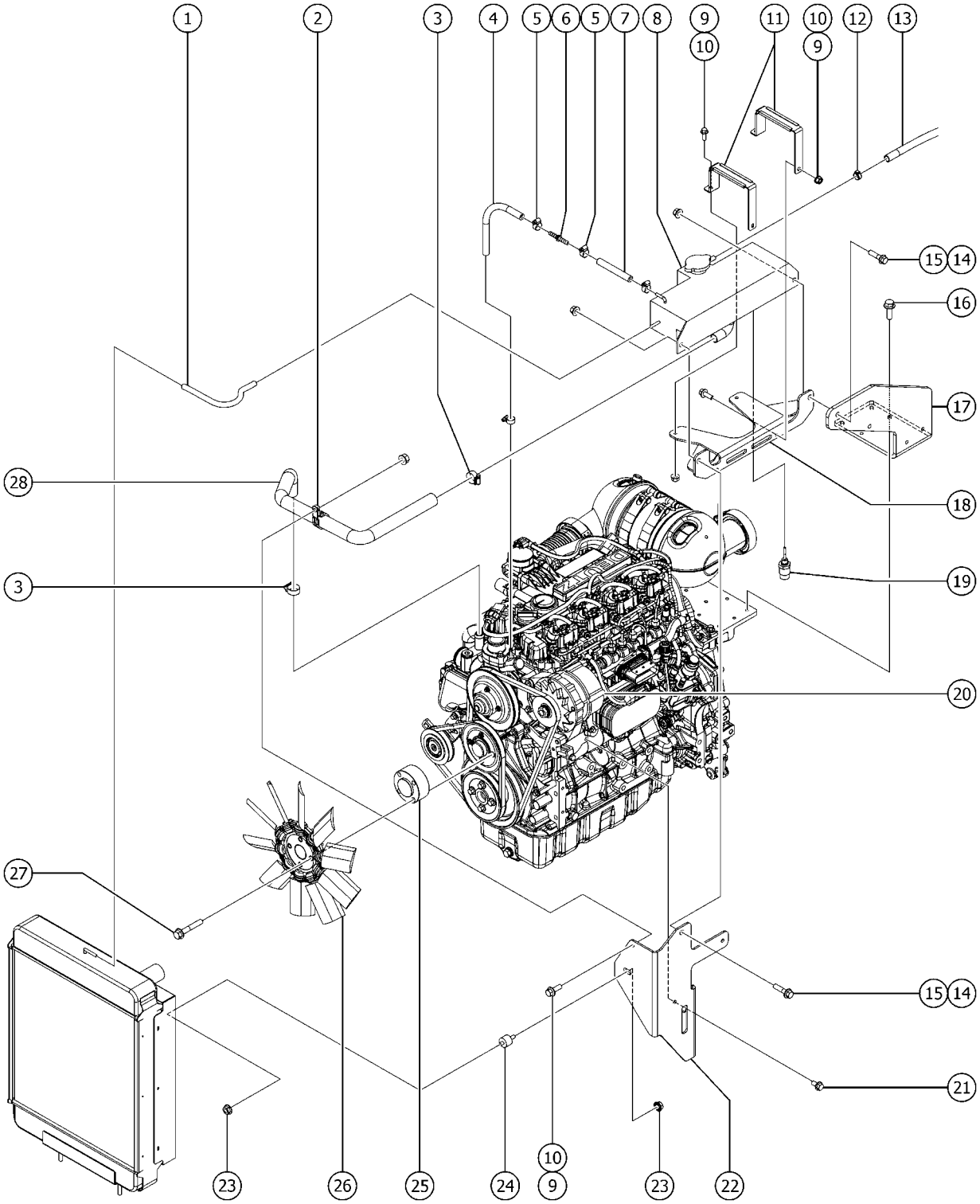

514.1 Deutz D2.9L4, View 4

Item	Part No.	Description	Qty.
1	823523GT	HOSE,RADIATOR VENT,DEUTZ D2.9	1
2	119394GT	CLAMP,1.38,#212X3/8,RUB CUSH	1
3	30348GT	CLAMP,HOSE,1.00	2
	824600GT	HOSE,HEATER,1/4" 4" cut to 8.5 inches	9 inches
5	21465GT	CLAMP,HOSE, .25" TO .63" X .3125"	4
6	1282119GT	2MM ORIFICE UNION, 1/4" HOSE	1
7	824600GT	HOSE,HEATER,1/4" 4" cut to 3.5 inches	4 inches
8	161938GT	EXPANSION TANK,METAL,D2.9	1
8-	1274900GT	SIGHT GLASS for 161938	
8-	1254823GT	CAP,RADIATOR,PERKINS (94232) for 161938	
9	824078GT	SCREW,HHF,1/4-20X.75,8,ZAG	5
10	824027GT	NUT, TL FLG, 1/4-20, G, ZAG	5
11	1253922GT	FORMING,EXP TANK BAND,D2.9	2
11-	1254452GT	EXTRUSION,RUBBER STRIP,LG,D2.9 (for 1253922)	
11-	1254453GT	EXTRUSION,RUBBER STRIP,SM,D2.9 (for 1253922)	
12	31983GT	CLAMP,HOSE,1 EAR, 9/16	1
13	1259441GT	HOSE,OVERFLOW,DEUTZ D2.9 replaced by 822606GT	1
13B	822606GT	TUBING,VINYL,3/8" CLEAR cut at 46.00" long	1
14	824092GT	SCREW, HHF, 3/8-16 X 1.5, 8, ZAG	2
15	824029GT	NUT, TL FLG, 3/8-16, G, ZAG	2
16	824133GT	SCREW,HHF,M8-1.25X25,DIN6921,10.9,ZAB	4
17	1255692GT	FORMING,EXPANSION TANK SUPT	1
18	1254267GT	WDMT,EXPANSION TANK SUPT	1
19	218715GT	COOLNT LEVL SENSR, DEUTZTCD3.6	1
20	236251GT	ALTERNATOR,95 AMP,DEUTZ TCD3.6	1
21	1251983GT	SCREW,HHF,M8-1.25X16,DIN6921,10.9,ZAB	2
22	214934GT	FORMING,RAD EXPSN TANK SUPT	1

514.1 Deutz D2.9L4, View 4

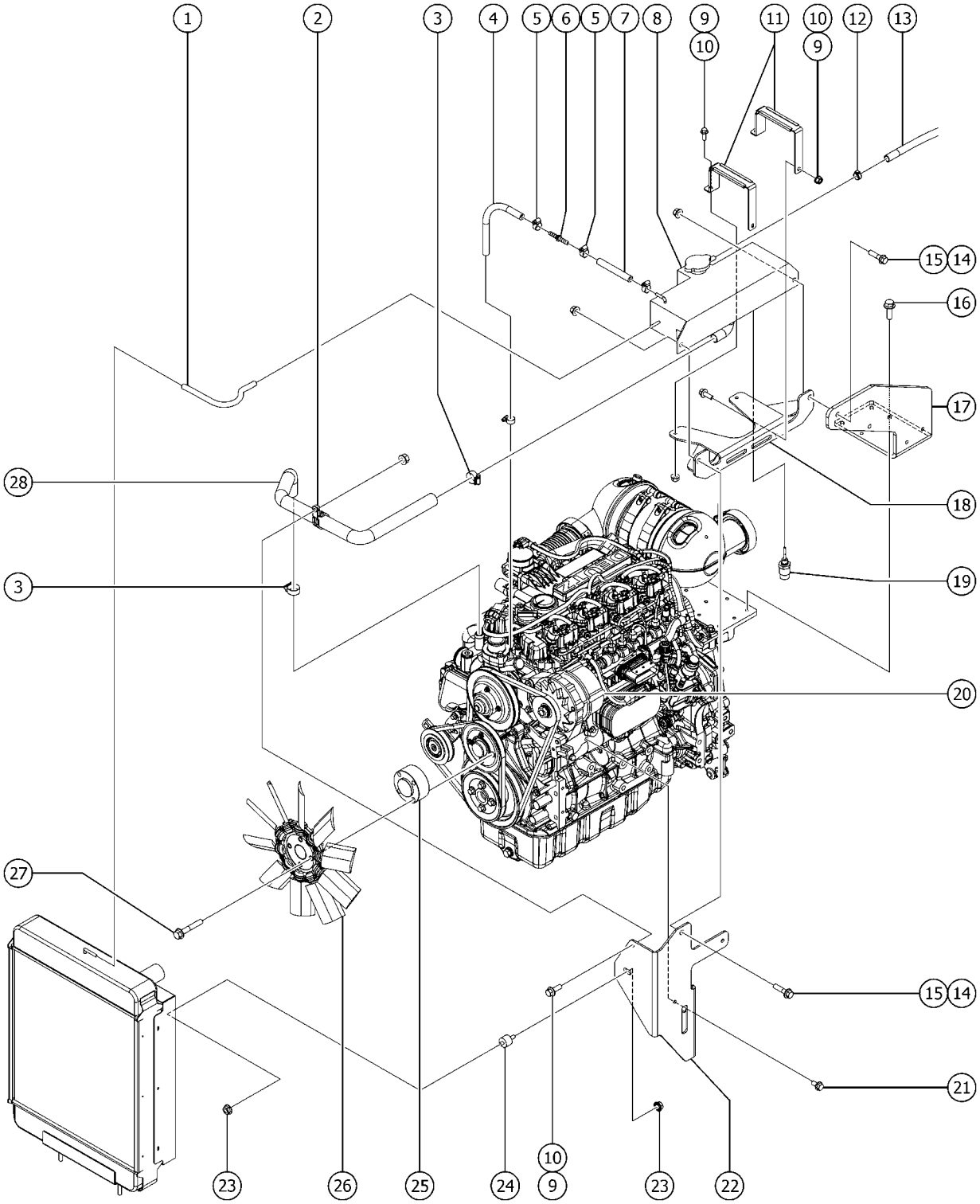

514.1 Deutz D2.9L4, View 4

Item	Part No.	Description	Qty.
23	1256679GT	NUT,SERRATED,1/4-20,8,ZAG	2
24	219437GT	ISOLATOR,VIBRATION	1
25	1256599GT	SPACER, FAN, DEUTZ, 29.5MM LNG	1
26	214682GT	FAN, 10 BLADE, 15"	1
27	1257231GT	SCREW,HHF,M8-1.25X50,DIN6921,1	4
28	1251731GT	HOSE,EXPANSION TANK,D2.9	1

515.1 Deutz D2.9L4, View 5

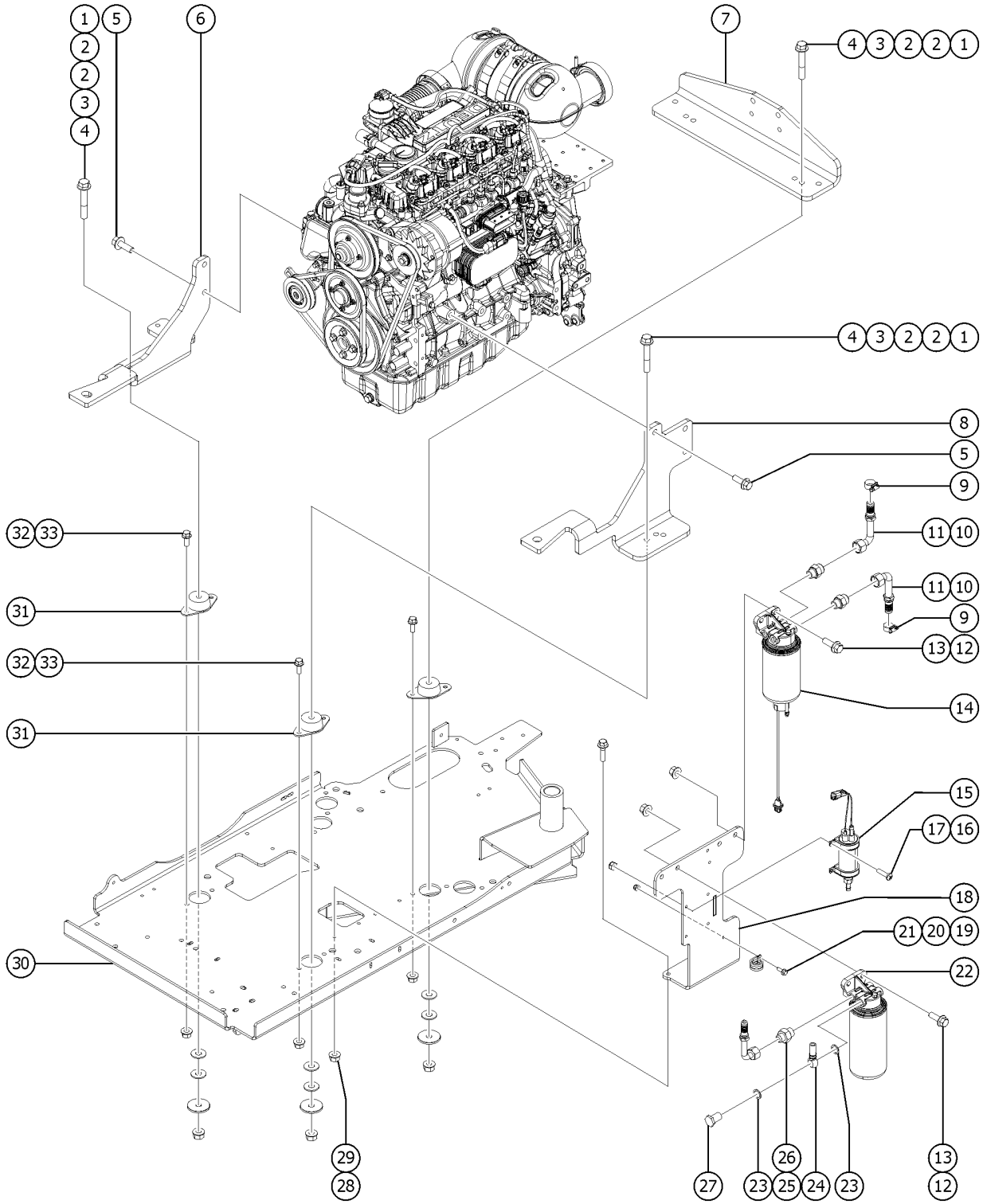

515.1 Deutz D2.9L4, View 5

Item	Part No.	Description	Qty.
1	1295334GT	TERM QC TAB - #8 RING, .250, 45 DEG, BRASS	4
2	1255760GT	WASHER,FLAT,1/2,USS,ZAG	8
3	1256283GT	WASHER,FLAT,.5X2.25X.188,ZAG	4
4	1274172GT	NUT,NYLOCK FLG,1/2-13,G,ZAG	4
5	1256776GT	SCREW,HHF,M14-2.0X35,DIN6921,10.9,ZAB	5
6	237190GT	FORMING, RIGHT ENGINE MOUNT	1
7	237191GT	FORMING, REAR ENGINE MOUNT	1
8	237189GT	FORMING, LEFT ENGINE MOUNT	1
9	46131GT	CLAMP,HOSE,.63" - 1.0" X .5"	2
10	162207GT	FITTING,ELBOW,8GS-8FJX90S	2
11	162209GT	FITTING,CONN,16MM-8MJ	2
12	824091GT	SCREW, HHF, 3/8-16 X 1.25, 8, ZAG	4
13	824029GT	NUT, TL FLG, 3/8-16, G, ZAG to SN S65XCH-46303	4
13B	1274322GT	NUT,NYLOCK FLG,3/8-16,F,ZAG from SN S65XCH-46304	4
14	1261239GT	ASSY,FUEL PREFILTER,DEUTZ 2.9 includes head, filter and sensor cable	1
14-	1261240GT	CABLE,WIF SENSOR,DEUTZ 2.9	
14-	236260GT	FILTER, FUEL PRE-FILTER, SPIN-ON, DEUTZ	
14-	1261241GT	SEAL,WIF SENSOR,DEUTZ 2.9	
15	236259GT	LIFT PUMP,FUEL,DEUTZ TCD3.6	
15-	21465GT	CLAMP,HOSE, .25" TO .63" X .3125"	1
15-	46131GT	CLAMP,HOSE,.63" - 1.0" X .5"	1
16	824215GT	SCREW, PHPM, 10-32 X .75, ZAG	4
17	6178GT	NUT, NYLOCK, 10-32	4
18	1257961GT	WELDMENT, FUEL FILTER BRACKET	1
19	824078GT	SCREW,HHF,1/4-20X.75,8,ZAG from SN S65XCH-46304	2
20	13268GT	CLAMP,0.75,#12 X 1/4,RUB CUSH from SN S65XCH-46304	2
21	1277924GT	NUT,NYLOCK FLG,1/4-20,F,ZAG from SN S65XCH-46304	2
22	1261236GT	ASSY,FUEL FILTER,DEUTZ 2.9	1

515.1 Deutz D2.9L4, View 5

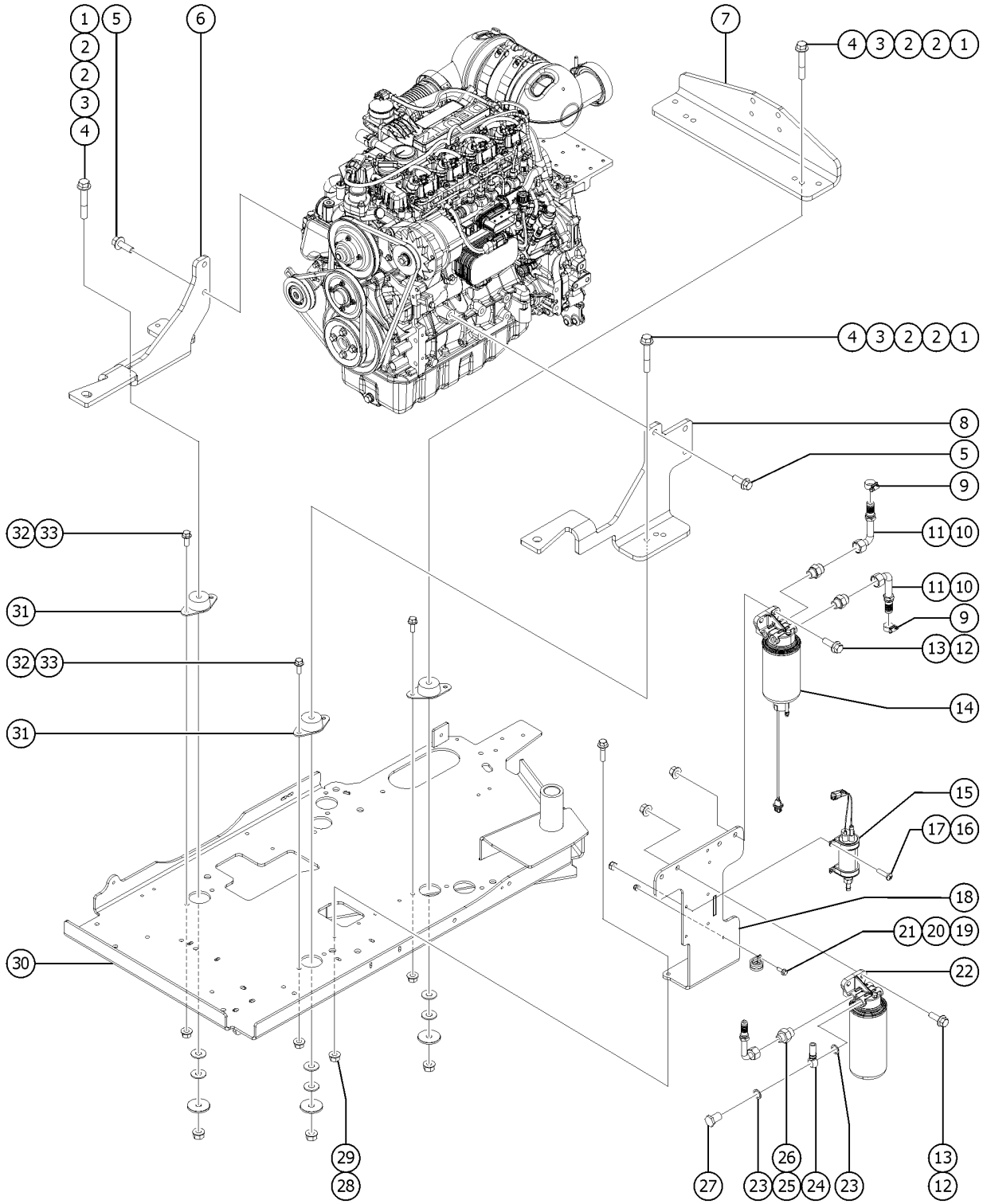

515.1 Deutz D2.9L4, View 5

Item	Part No.	Description	Qty.
22-	214228GT	FILTER, DEUTZ 2.9, FUEL	
23	1255400GT	WASHER,COPPER,DEUTZ,QC	2
24	1255396GT	FITTING,FUEL,1/2,D2.9,QC	1
25	162208GT	FITTING,CONN,16MM-6MJ	1
26	162206GT	FITTING,ELBOW,6GS-6FJX90S	1
26-	21465GT	CLAMP,HOSE, .25" TO .63" X .3125"	1
27	1255399GT	BOLT,BANJO,DEUTZ,QC	1
28	824027GT	NUT, TL FLG, 1/4-20, G, ZAG to SN S65XCH-46303	2
28B	1277924GT	NUT,NYLOCK FLG,1/4-20,F,ZAG from SN S65XCH-46304	2
29	824079GT	SCREW,HHF,1/4-20X1,8,ZAG	2
30		Ref. WELDMENT, ENGINE TRAY refer to 528.1	1
31	70452GT	ISOLATOR,ENGINE VIBRATION	4
32	824090GT	SCREW,HHF,3/8-16X1,8,ZAG	8
33	1274322GT	NUT,NYLOCK FLG,3/8-16,F,ZAG	8

516.1 Deutz 2.9L Turbo, View 1

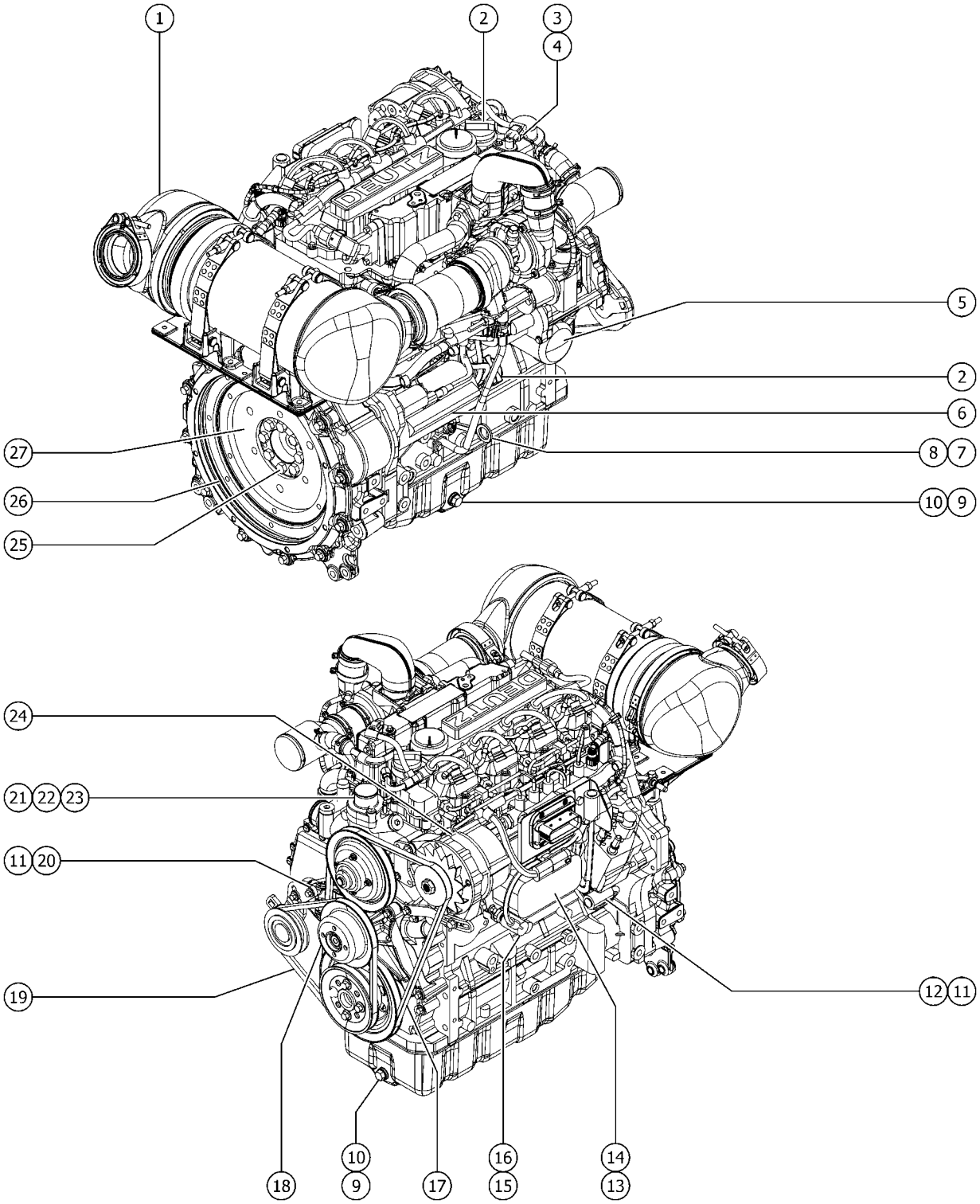

516.1 Deutz 2.9L Turbo, View 1

Item	Part No.	Description	Qty.
A	1262870GT	GLOW PLUG, DEUTZ	4
B	1262871GT	SEAL, FRONT ENGINE,DEUTZ	1
C	1262872GT	SEAL, REAR ENGINE,DEUTZ	1
D	1262874GT	WATER PUMP	1
E	1262875GT	O-RING, WATER PUMP	1
F	1259654GT	INTAKE BREATHER	1
G	1259899GT	HARNESS, ENGINE, DEUTZ TD2.9	1
H	1277974GT	PINS,CONNECTOR,INJ HARNESS,D2.9	
1		OXIDATION CATALYST,DEUTZ (diesel oxygen catalyst/muffler)(contact Genie Parts; engine serial number required)	1
2	29557GT	CAP,OIL FILLER,DEUTZ,DIESEL***	2
3	1262896GT	SENSOR,INTAKE AIR PRESSURE	1
4	1262897GT	O-RING, INTAKE AIR PRESSURE SENSOR	1
5	49924GT	FILTER,OIL,DEUTZ	1
6	1254594GT	STARTER,3.2KW,DEUTZ D2.9	1
6-	1262868GT	BOLT, DEUTZ STARTER not included sold seperately	
6B	825939GT	FORMING, CLAMP, BATTERY CABLE	
6B	78736GT	CLAMP,2 HOSE,PLASTIC for 825939	
7	825708GT	DIPSTICK,TD2.9	1
8	1262881GT	ORING, OIL DIP STICK	1
9	102587GT	PLUG,ENGINE OIL,DEUTZ F4L2011	2
10	108538GT	RING / SEALING	2
11	1262894GT	SENSOR,CAM/CRANKSHAFT POSITION (crankshaft)	1
11B	1262894GT	SENSOR,CAM/CRANKSHAFT POSITION hidden from view (camshaft)	1
12	1262895GT	O-RING, CRANKSHAFT POSITION SENSOR	1
13	1260357GT	OIL COOLER,TD2.9	1
14	1262883GT	GASKET, OIL COOLER, DEUTZ	1
15	824673GT	SENSOR,LOW PRESSURE,DEUTZ 2.9L	1
16	1262893GT	O-RING, OIL PRESSURE SENSOR	1

516.1 Deutz 2.9L Turbo, View 1

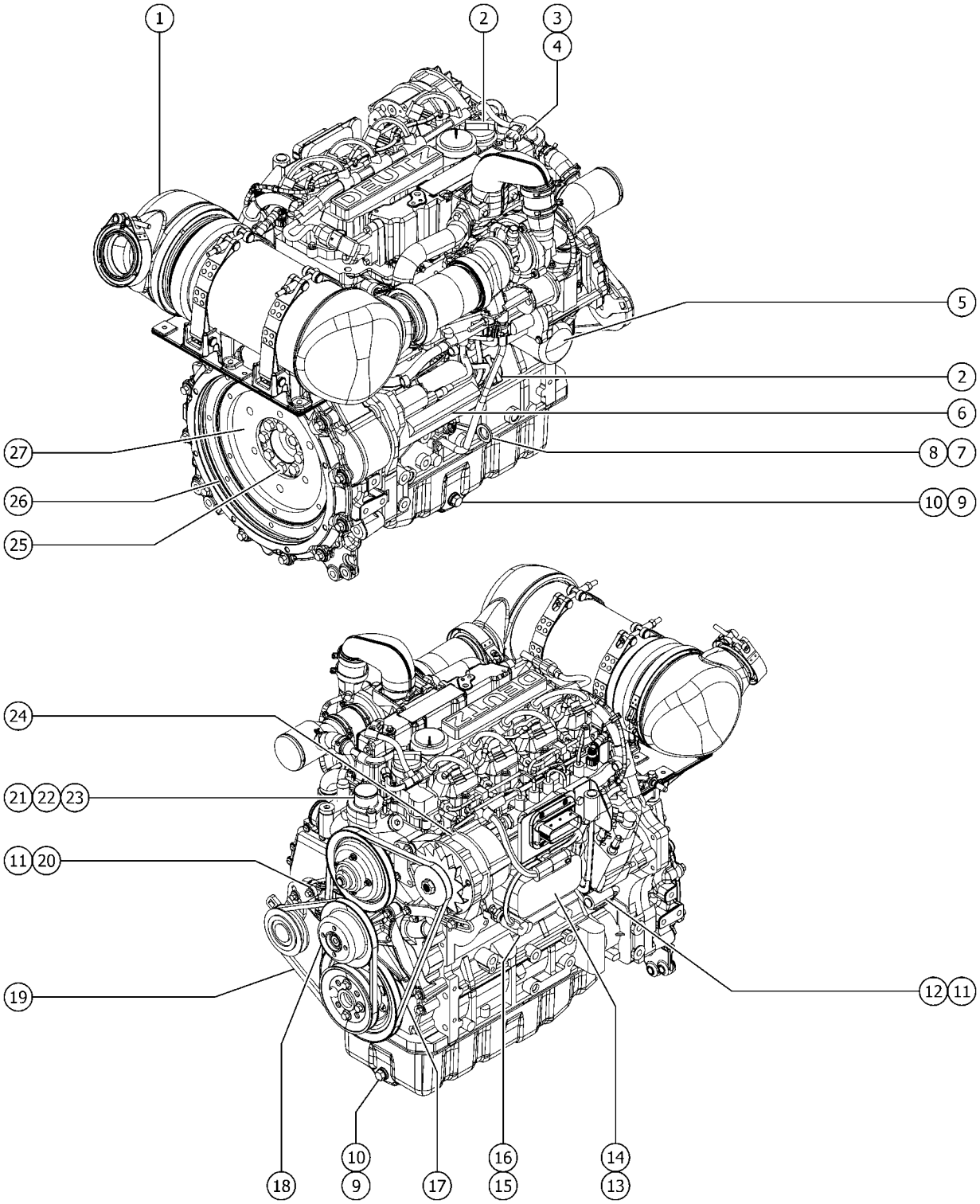

516.1 Deutz 2.9L Turbo, View 1

Item	Part No.	Description	Qty.
17	1262866GT	FAN BELT, ALTERANTOR	1
18	236248GT	PULLEY ASSEMBLY,ALTERNATOR,TCD	1
19	1262867GT	V-BELT, DEUTZ	1
20	1262899GT	O-RING, CAMSHAFT POSITION SENSOR hidden from view	1
21	1262877GT	THERMOSTAT HOUSING	1
22	1262876GT	THERMOSTAT,DEUTZ	1
23	1262878GT	GASKET, THERMOSTAT HOUSING	1
24	236251GT	ALTERNATOR,95 AMP,DEUTZ TCD3.6	1
25	1262873GT	BOLT, DEUTZ FLYWHEEL	8
26	89785GT	RING GEAR,DEUTZ F3L2011F	1
27	1259660GT	FLYWHEEL, SAE 8/10 order with item 25	1

517.1 Deutz 2.9L Turbo, View 2

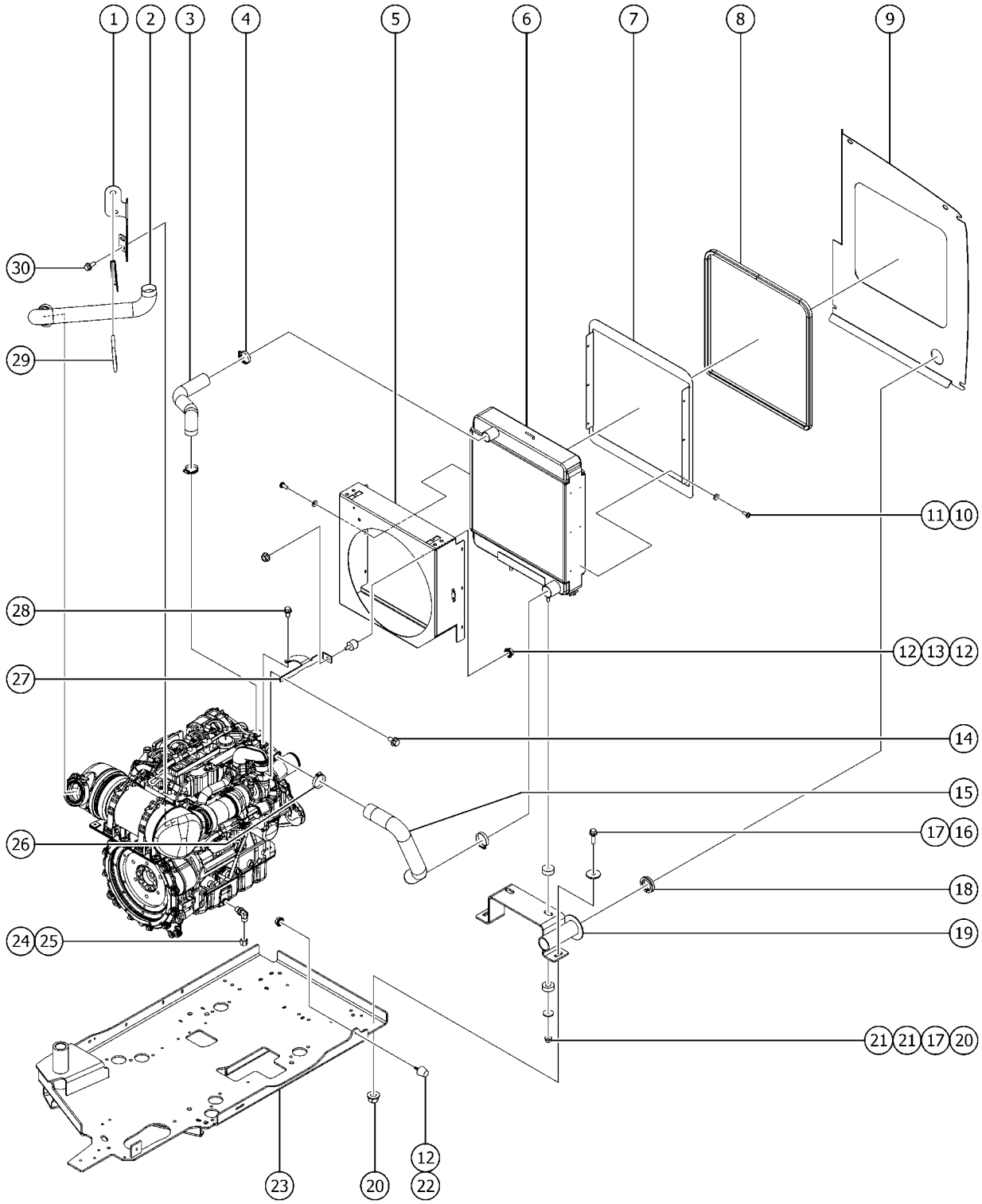

517.1 Deutz 2.9L Turbo, View 2

Item	Part No.	Description	Qty.
A		Due to Tier 4 regulations, many engine replacement parts require the engine serial number at time of order placement. When ordering engine parts please have both machine and engine serial numbers available. For internal engine parts, contact engine dealer	
1	1262831GT	FORMING, SUPPORT, TAILPIPE	1
2	826822GT	EXHAUST PIPE, TIER IV DEUTZ, Z	1
3	162283GT	HOSE, UPPER RADIATOR, DEUTZ D	1
4	22672GT	CLAMP,HOSE,1.75	2
5	1261921GT	SHROUD, 17" FAN	1
5-	45454GT	CLAMP,0.75,#12 X 3/8,RUB CUSH*	1
6	826795GT	RADIATOR,6-CORE,19.375W X 18.1	1
7	1268010GT	FORMING, SHROUD, INLET, RADIATOR	1
8	1262841GT	TRIM SEAL,RADIATOR,DEUTZ TD2.9	1
9	1262839GT	FORMING, BAFFLE, AIR INTAKE	1
10	824220GT	SCREW,PHPM SEMS ET,10-24X.5,ZA	12
11	1253185GT	WASHER,FLAT,#10,USS,ZAG	12
12	1255805GT	NUT,SERRATED,5/16-18,8,ZAG	5
13	219437GT	ISOLATOR,VIBRATION	1
14	237238GT	SCREW,HHF,M6-1.0X12,DIN6921,10	1
15	162284GT	HOSE,LOWER RADIATOR, 2.9L DEUT	1
16	824091GT	SCREW, HHF, 3/8-16 X 1.25, 8, ZAG	2
17	824120GT	WASHER, FLAT, .375 X 1.50 X .125, ZAG	4
18	1262842GT	SEAL,AIR INTAKE ADAPTER,LOWER	1
19	1262838GT	WELDMENT, SUPPORT, RADIATOR	1
20	824029GT	NUT, TL FLG, 3/8-16, G, ZAG	4
21	24038GT	SHOCK MOUNT,SMALL	4
22	1261277GT	RUBBER BUMPER, 1.25 X 1.25 IN	2
23		Ref. WELDMENT, ENGINE TRAY refer to 528.1	1
24	69775GT	CAP, 520112-8 from SN S65XCH-48164	1
25	54428GT	FITTING, HYDRUALIC, 90DEG, O-RING from SN S65XCH-48164	1

517.1 Deutz 2.9L Turbo, View 2

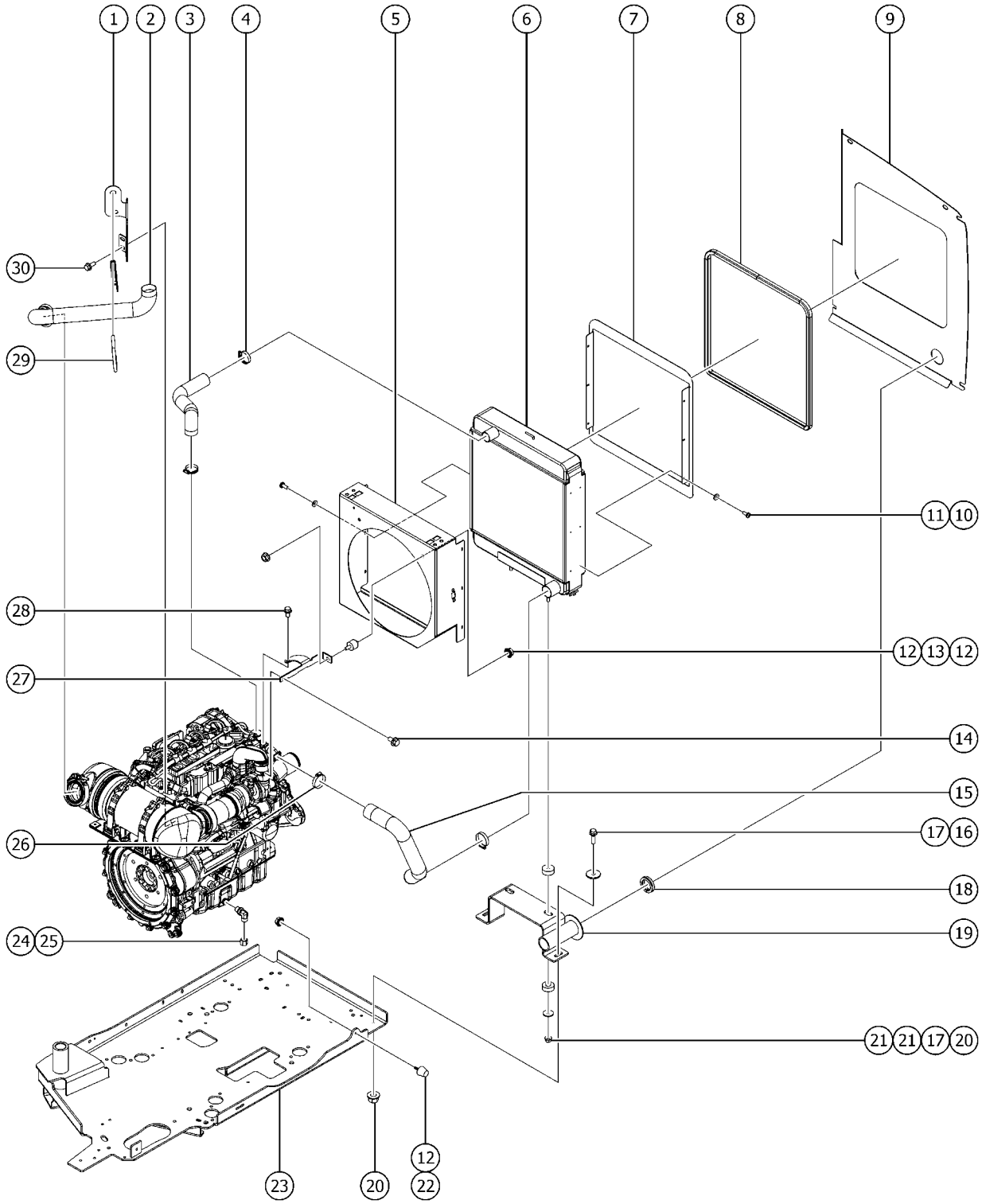

517.1 Deutz 2.9L Turbo, View 2

Item	Part No.	Description	Qty.
26	35434GT	CLAMP,HOSE,2.00***	2
27	1273919GT	FORMING, SUPPORT, RADIATOR	1
28	1251983GT	SCREW,HHF,M8-1.25X16,DIN6921,10.9,ZAB	1
29	71911GT	CLAMP,MUFFLER, 2.50 INCH	1
30	824132GT	SCREW,HHF,M8-1.25X20,DIN6921,10.9,ZAB	2

518.1 Deutz 2.9L Turbo, View 3

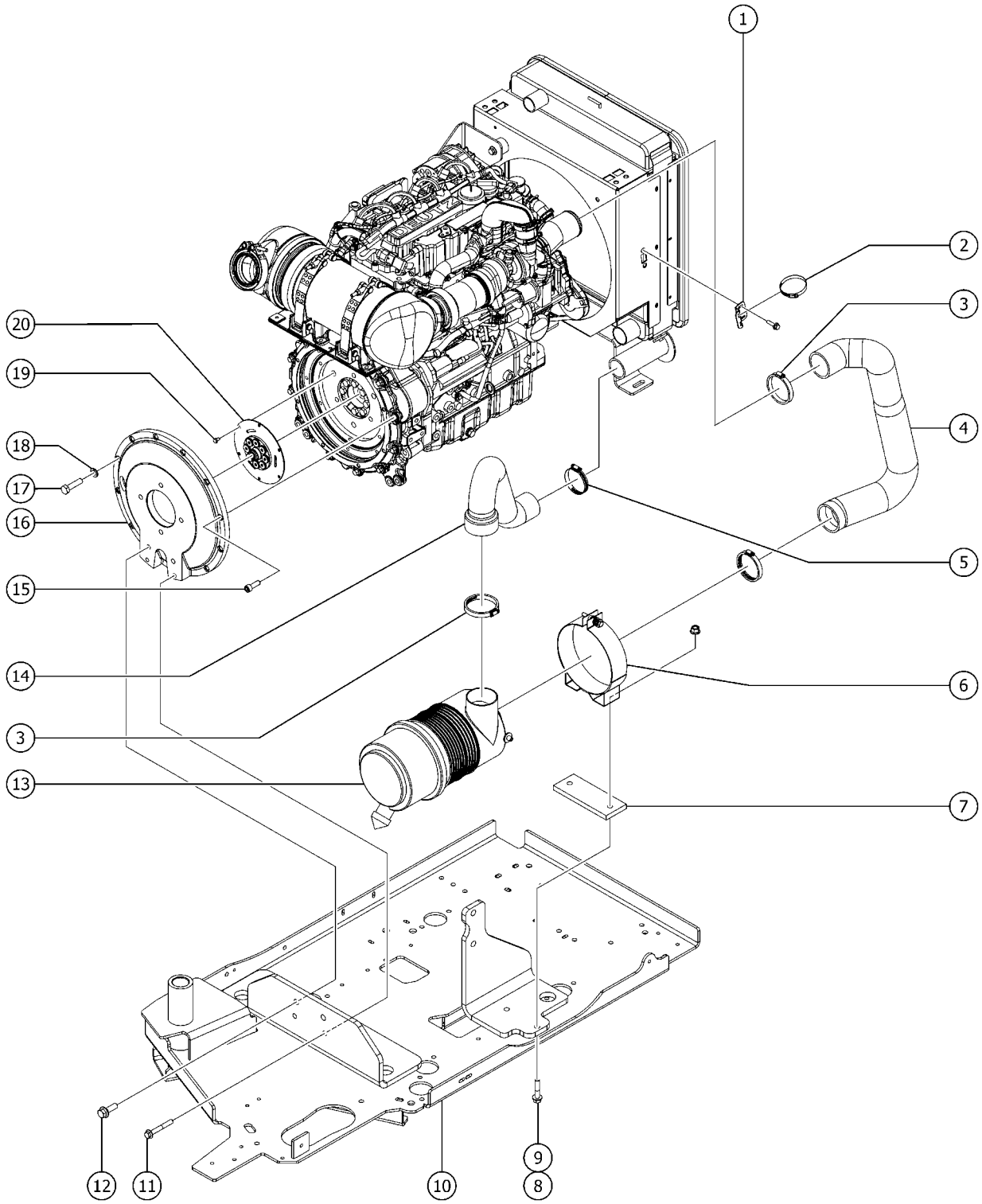

518.1 Deutz 2.9L Turbo, View 3

Item	Part No.	Description	Qty.
A		Due to Tier 4 regulations, many engine replacement parts require the engine serial number at time of order placement. When ordering engine parts please have both machine and engine serial numbers available. For internal engine parts, contact engine dealer	
1	823751GT	BRACKET,INTAKE PIPE,MOUNT,DEUT	1
2	30971GT	CLAMP,HOSE,3.00"	2
3	30489GT	CLAMP,HOSE,3.50	3
4	1262829GT	HOSE, INTAKE, AIR	1
5	45435GT	CLAMP,HOSE,2.50"	1
6	81468GT	MOUNTING BAND,AIR CLEANER	1
7	1273918GT	SPACER, AIR CLEANER	1
8	1255763GT	SCREW,HHF,5/16-18X1.5,8,ZAG	2
9	824028GT	NUT,TL FLG,5/16-18,G,ZAG	2
10		Ref. WELDMENT, ENGINE TRAY refer to 528.1	
11	826008GT	SCREW,HHF,M10-1.5X75,DIN6921,10.9,ZAB	2
12	1253498GT	SCREW,HHF,1/2-13X1.5,8,ZAG	2
13	81467GT	AIR CLEANER,NELSON	1
13-	52866GT	EVACUATOR VALVE-AIR CLEANER for 81467	
13-	62425GT	FILTER,AIR CLEANER, SUPERBOOM for 81467	
13-	75450GT	AIR CLEANER CLIPS, SUPERBOOM for 81467	
13-	75451GT	AIR CLEANER COVER, SUPERBOOM* for 81467	
14	1262828GT	HOSE, INTAKE, DEUTZ TD2.9	1
15	1255666GT	SCREW,SHC,M10-1.5X30,DIN912,12.9,ZAB	9
16	70381GT	COVER,FLYWHEEL CASTING	1
17	25548GT	SCREW,HHC,M10 X 40MM,GRD8	1
18	824142GT	WASHER,LOCK,M10,ZAB	1
19	1257421GT	SCREW,HHC,M10-1.5X16,DIN933,10	6
20	128004GT	COUPLER,15 TOOTH,FBA,SAE8***	1

519.1 Deutz 2.9L Turbo, View 4

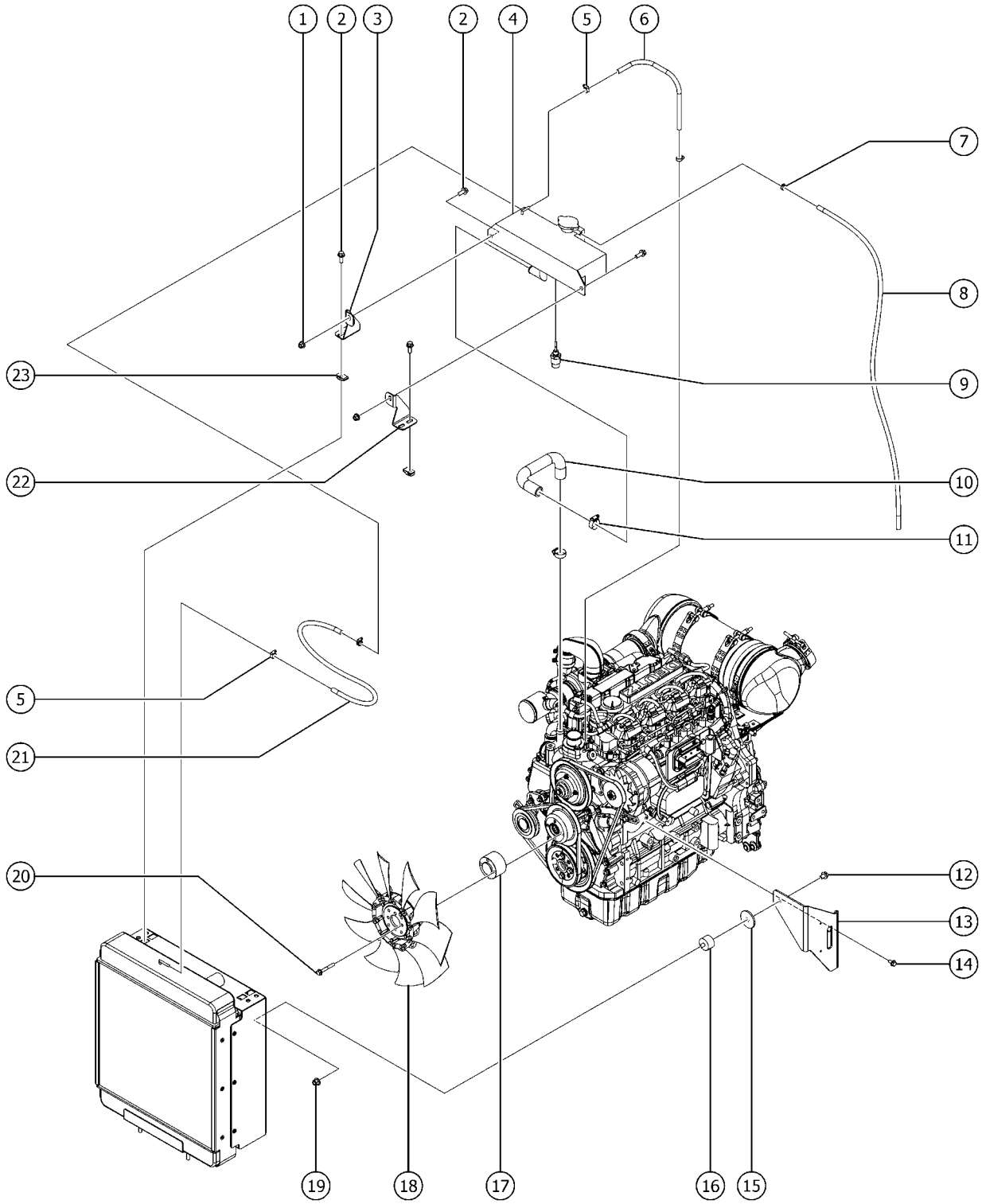

519.1 Deutz 2.9L Turbo, View 4

Item	Part No.	Description	Qty.
A		Due to Tier 4 regulations, many engine replacement parts require the engine serial number at time of order placement. When ordering engine parts please have both machine and engine serial numbers available. For internal engine parts, contact engine dealer	
1	824029GT	NUT, TL FLG, 3/8-16, G, ZAG	2
2	824090GT	SCREW,HHF,3/8-16X1,8,ZAG	6
3	1261925GT	FORMING, BRACKET, TANK, EXPANS	1
4	161938GT	EXPANSION TANK,METAL,D2.9	1
4-	1254823GT	CAP,RADIATOR,PERKINS (94232) for 161938	
5	21465GT	CLAMP,HOSE, .25" TO .63" X .3125"	4
6	824600GT	HOSE,HEATER,1/4" 4"	13 inches
7	31983GT	CLAMP,HOSE,1 EAR, 9/16	1
8	1259441GT	HOSE,OVERFLOW,DEUTZ D2.9 replaced by 822606GT	1
8B	822606GT	TUBING,VINYL,3/8" CLEAR cut at 46.00" long	1
9	218715GT	COOLNT LEVL SENSR, DEUTZTCD3.6	1
10	1261928GT	HOSE, TANK, EXPANSION	1
11	19273GT	CLAMP,HOSE,.75 **	2
12	237352GT	SCREW,HHF,M10-1.5X16,DIN6921,10.9,ZAB	1
13	1256165GT	FORMING,RADIATOR SUPPORT,LH	1
14	1251983GT	SCREW,HHF,M8-1.25X16,DIN6921,10.9,ZAB	2
15	1256283GT	WASHER,FLAT,.5X2.25X.188,ZAG	1
16	1255451GT	ISOLATOR VIBRATION DAMPENER	1
17	1258641GT	SPACER, FAN, DEUTZ, 43MM LNG	1
18	1251496GT	FAN,10 BLADE,17",DEUTZ 2.9L	1
19	1283015GT	NUT,NYLOCK FLG,M10-1.5,DIN6926,10,ZAB	1
20	1258771GT	SCREW,HHF,M8-1.25X60,DIN6921,10.9,ZAB	4
21	824600GT	HOSE,HEATER,1/4" 4"	25 inches
22	1261926GT	FORMING, BRACKET, TANK, EXPANS	1
23	29868GT	SPRING CLIP,3/8-16,.05-.20X.73,ZAG	4

520.1 Deutz 2.9L Turbo, View 5

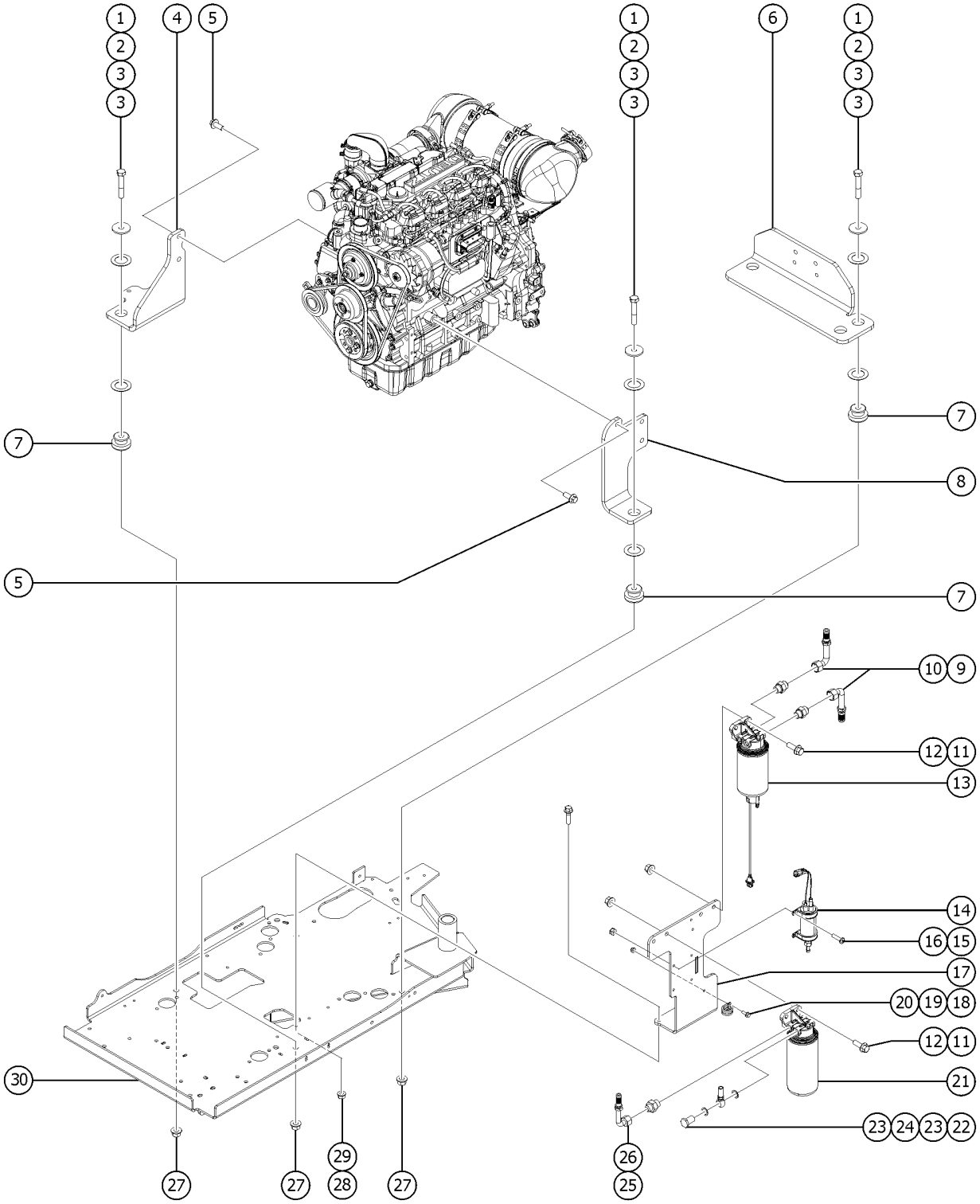

520.1 Deutz 2.9L Turbo, View 5

Item	Part No.	Description	Qty.
-		Due to Tier 4 regulations, many engine replacement parts require the engine serial number at time of order placement. When ordering engine parts please have both machine and engine serial numbers available. For internal engine parts, contact engine dealer	
1	1256169GT	SCREW,HHC,5/8-11X3.5,8,ZAG	4
2	824123GT	WASHER,FLAT,.625X2.25X.188,ZAG	4
3	1251565GT	WASHER,SHIM,1.56X2.5X.061,ZAG	8
4	1262832GT	FORMING, ENGINE MOUNT, RH	1
5	1256776GT	SCREW,HHF,M14-2.0X35,DIN6921,10.9,ZAB	5
6	1261920GT	FORMING, MOUNT, ENGINE, REAR	1
7	102045GT	ISOLATOR,ENGINE VIBRATION	4
8	1262833GT	FORMING, ENGINE MOUNT, LH	1
9	162207GT	FITTING,ELBOW,8GS-8FJX90S	2
10	162209GT	FITTING,CONN,16MM-8MJ	2
11	824091GT	SCREW, HHF, 3/8-16 X 1.25, 8, ZAG	4
12	824029GT	NUT, TL FLG, 3/8-16, G, ZAG to SN S65XCH-46303	4
12B	1274322GT	NUT,NYLOCK FLG,3/8-16,F,ZAG from SN S65XCH-46304	4
13	1261239GT	ASSY,FUEL PREFILTER,DEUTZ 2.9 includes head, filter and sensor cable	1
13-	1261240GT	CABLE,WIF SENSOR,DEUTZ 2.9	
13-	236260GT	FILTER, FUEL PRE-FILTER, SPIN-ON, DEUTZ	
13-	1261241GT	SEAL,WIF SENSOR,DEUTZ 2.9	
14	236259GT	LIFT PUMP,FUEL,DEUTZ TCD3.6	1
15	824215GT	SCREW, PHPM, 10-32 X .75, ZAG	4
16	6178GT	NUT, NYLOCK, 10-32	4
17	1257961GT	WELDMENT, FUEL FILTER BRACKET	1
18	824078GT	SCREW,HHF,1/4-20X.75,8,ZAG from SN S65XCH-46304	2
19	13268GT	CLAMP,0.75,#12 X 1/4,RUB CUSH from SN S65XCH-46304	2
20	1277924GT	NUT,NYLOCK FLG,1/4-20,F,ZAG from SN S65XCH-46304	2
21	1261236GT	ASSY,FUEL FILTER,DEUTZ 2.9	1
21-	214228GT	FILTER, DEUTZ 2.9, FUEL	

520.1 Deutz 2.9L Turbo, View 5

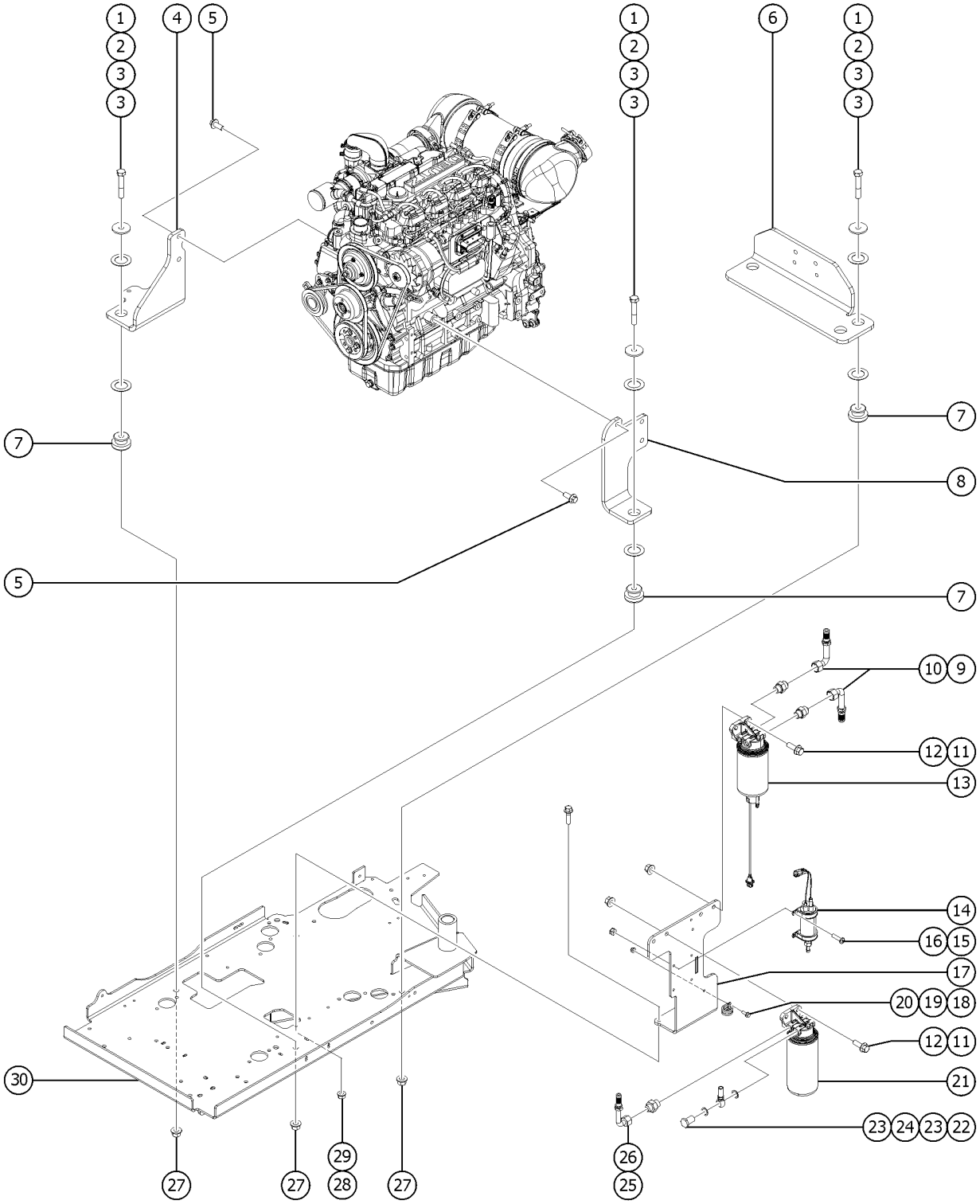

520.1 Deutz 2.9L Turbo, View 5

Item	Part No.	Description	Qty.
21-	1256482GT	KIT,MED PRES FUEL SUPPLY,D2.9	
22	1255399GT	BOLT,BANJO,DEUTZ,QC	1
23	1255400GT	WASHER,COPPER,DEUTZ,QC	2
24	1255396GT	FITTING,FUEL,1/2,D2.9,QC	1
25	162206GT	FITTING,ELBOW,6GS-6FJX90S	1
26	162208GT	FITTING,CONN,16MM-6MJ	1
27	1283007GT	NUT,NYLOCK FLG,5/8-11,F,ZAG	4
28	824027GT	NUT, TL FLG, 1/4-20, G, ZAG to SN S65XCH-46303	2
28B	1277924GT	NUT,NYLOCK FLG,1/4-20,F,ZAG from SN S65XCH-46304	2
29	824079GT	SCREW,HHF,1/4-20X1,8,ZAG	2
30		Ref. WELDMENT, ENGINE TRAY refer to 528.1	

521.1 Perkins 404D-22, View 1

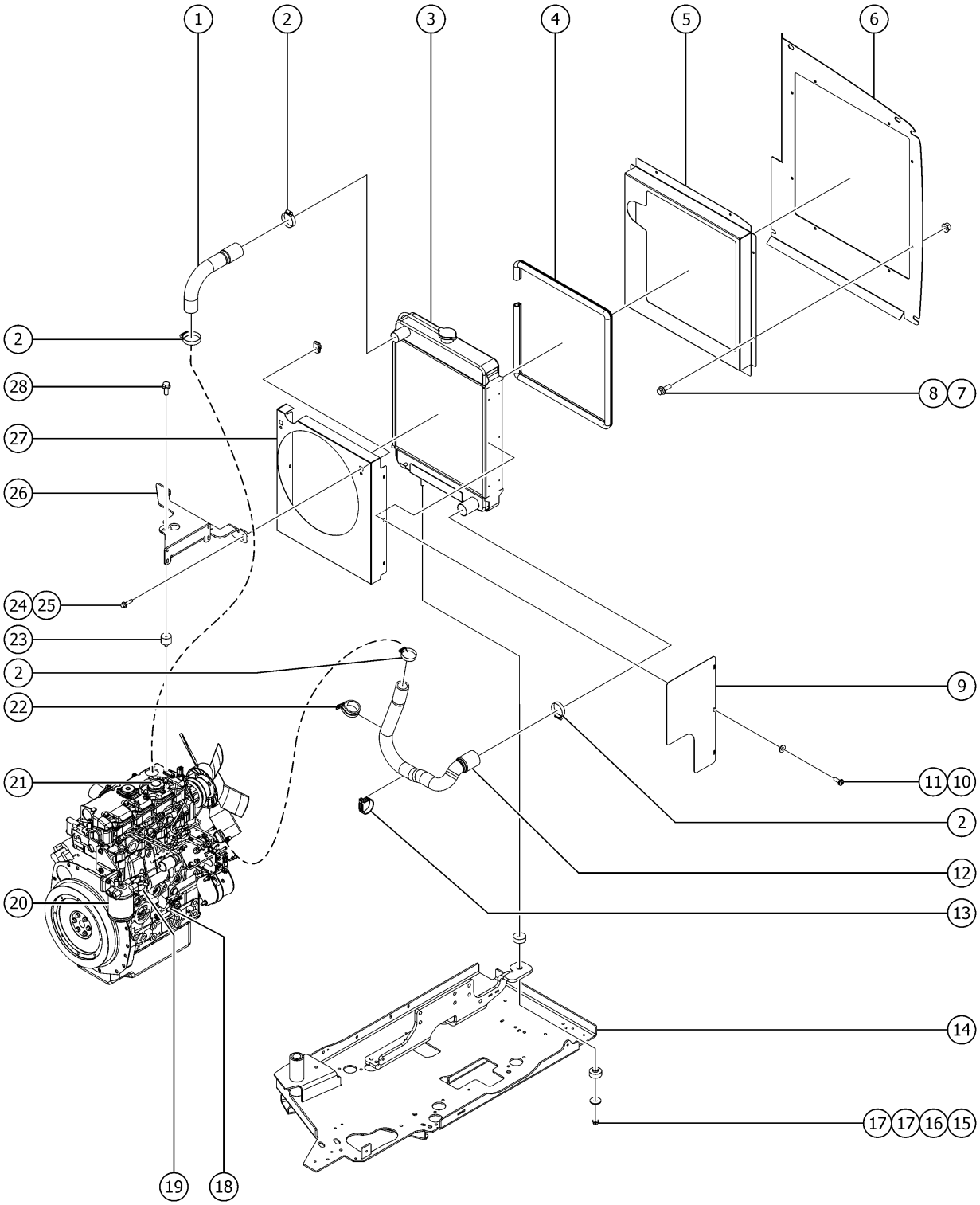

521.1 Perkins 404D-22, View 1

Item	Part No.	Description	Qty.
A		For internal engine parts, contact engine dealer	
B-	77736GT	GLOW PLUG (PERKINS 404-22)	
B-	128991GT	THERMOSTAT	
B-	147355GT	GASKET-THERMOSTAT HSG Engine block Thermostat	
B-	77477GT	GASKET,THERMOSTAT HSG Vertical Thermostat	
B-	94762GT	OIL FILTER - PERKINS	
1	54578GT	HOSE,UPPER RADIATOR,PERKINS	1
2	22672GT	CLAMP,HOSE,1.75	4
3	110304GT	RADIATOR,FORD/PERKINS***	1
4	1257836GT	TRIM SEAL,RADIATOR,PERKINS 404	1
5	106003GT	BAFFLE,PERKINS ENGINE	1
6	106172GT	BAFFLE,AIR INTAKE***	1
7	824078GT	SCREW,HHF,1/4-20X.75,8,ZAG	8
8	824027GT	NUT, TL FLG, 1/4-20, G, ZAG	8
9	54487GT	GUARD,FAN,FORD/PERKINS	1
10	824220GT	SCREW,PHPM SEMS ET,10-24X.5,ZA	6
11	1253185GT	WASHER,FLAT,#10,USS,ZAG	6
12	54579GT	HOSE,LOWER,RADIATOR,PERKINS	1
13	6653GT	CLAMP, 1.88, #30 X 1/4, RUB CUSH	1
14		REF. ENGINE TRAY refer to 528.1	
15	824029GT	NUT, TL FLG, 3/8-16, G, ZAG	2
16	824120GT	WASHER, FLAT, .375 X 1.50 X .125, ZAG	2
17	24038GT	SHOCK MOUNT,SMALL	4
18	128984GT	DIPSTICK, STRAIGHT SHORT	1
18-	128985GT	DIPSTICK TUBE, STRAIGHT SH	
19	72348GT	PUMP,LIFT(FUEL) PERKINS(54555)	1
19-	77990GT	KIT,SEAL,3CC PUMP***	
20	1262484GT	FUEL FILTER ASSY,PERKINS 404D/	1

521.1 Perkins 404D-22, View 1

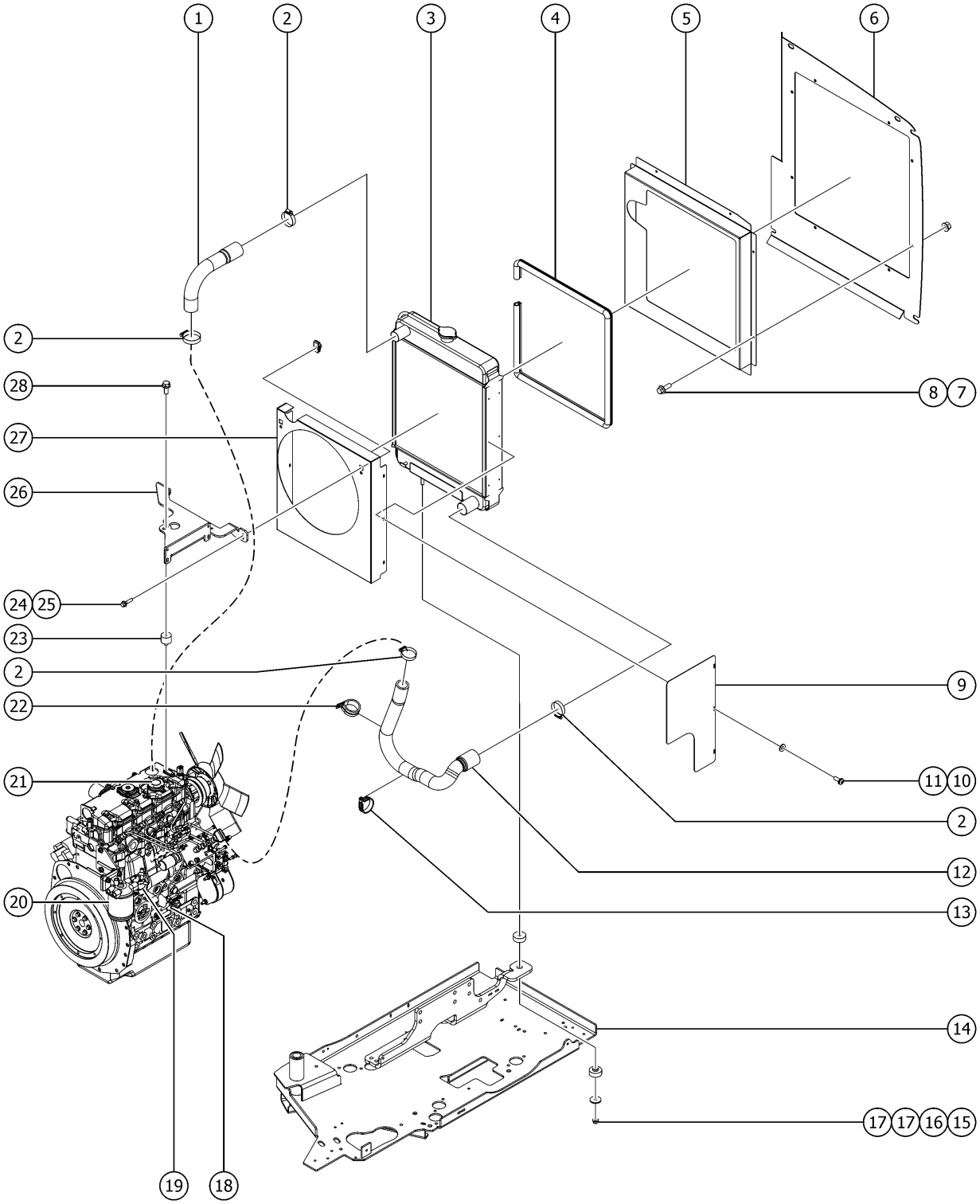

521.1 Perkins 404D-22, View 1

Item	Part No.	Description	Qty.
20-	62421GT	FILTER,FUEL,PERKINS	
21	65636GT	CAP, OIL FILLER	1
21-	65638GT	SEAL, OIL FILLER CAP	
22	39518GT	CLAMP,2.00,#32 X 3/8,RUB CUSH	1
23	60585GT	ISOLATOR,VIBRATION,M8 MALE/FEM	1
24	824079GT	SCREW,HHF,1/4-20X1,8,ZAG	2
25	56912GT	SPRING CLIP,1/4-20,.025-.15X.54,ZAG	2
26	88989GT	FORMING,UPPER RAD SUPPORT	1
27	88990GT	SHROUD,FAN	1
28	824132GT	SCREW,HHF,M8-1.25X20,DIN6921,10.9,ZAB	1

522.1 Perkins 404D-22, View 2

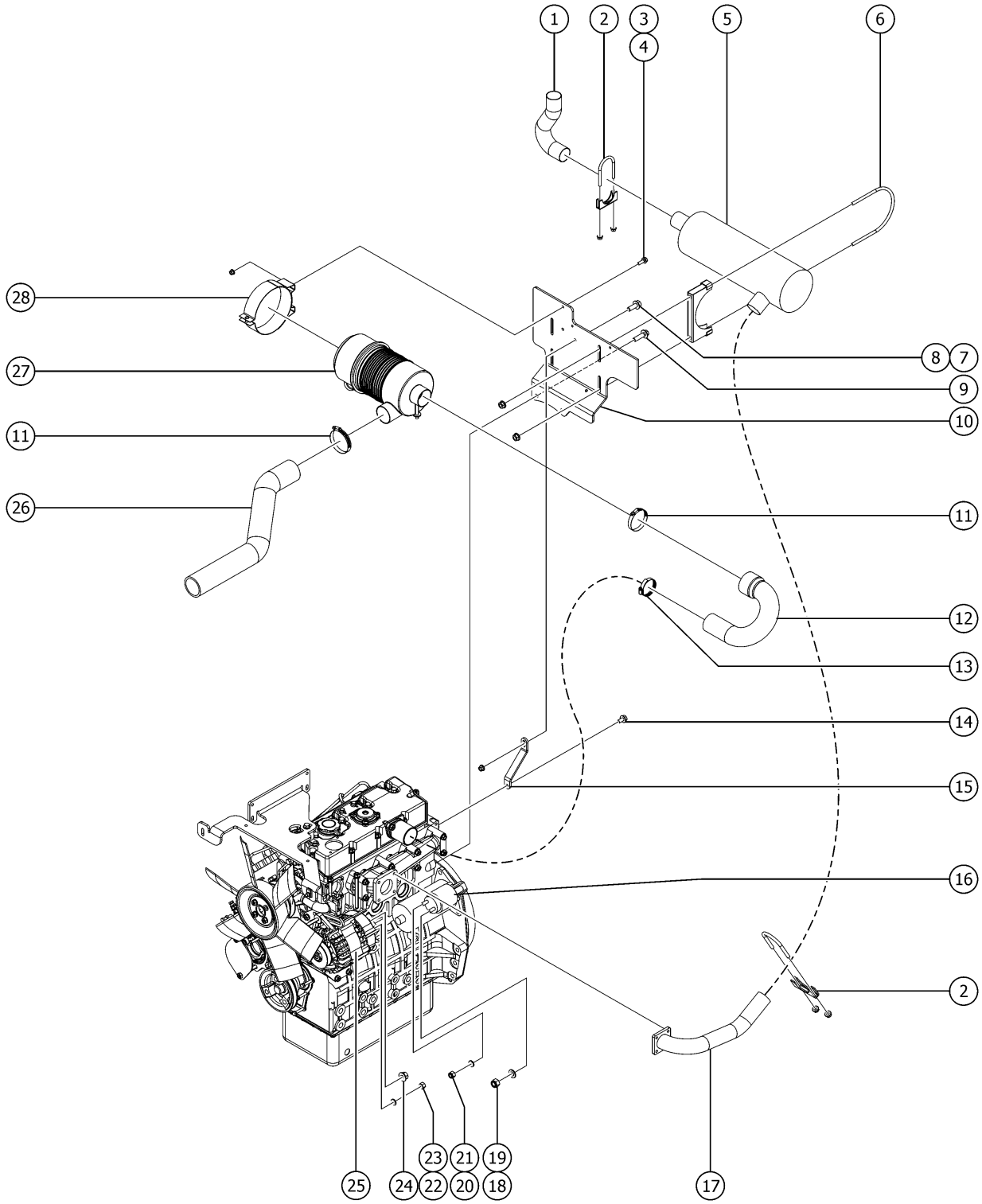

522.1 Perkins 404D-22, View 2

Item	Part No.	Description	Qty.
A		For internal engine parts, contact engine dealer	
1	822515GT	TAILPIPE, PERKINS, 404D	1
2	70385GT	CLAMP,EXHAUST,2.00 PLATED	2
3	824086GT	SCREW, HHF, 5/16-18 X 1, 8, ZAG	2
4	824028GT	NUT,TL FLG,5/16-18,G,ZAG	2
5	88841GT	MUFFLER,6"	1
6	88993GT	CLAMP,MUFFLER	2
7	824090GT	SCREW,HHF,3/8-16X1,8,ZAG	1
8	824029GT	NUT, TL FLG, 3/8-16, G, ZAG	1
9	1257834GT	SCREW,HHF,M12-1.75X45,DIN6921,10.9,ZAB	2
10	88991GT	FORMING,MUFFLER MOUNT	1
11	30971GT	CLAMP,HOSE,3.00"	2
12	88847GT	HOSE,AIR CLEANER TO INTAKE	1
13	45435GT	CLAMP,HOSE,2.50"	1
14	1251983GT	SCREW,HHF,M8-1.25X16,DIN6921,10.9,ZAB	1
15	88992GT	FORMING,MUFFLER SUPPORT	1
16	1262585GT	STARTER MOTOR,PERKINS 404D	1
17	110899GT	WELDMENT,EXHAUST PIPE	1
18	1283022GT	NUT,NYLOCK,M8-1.25,DIN985,10,ZAB	1
19	824144GT	WASHER,FLAT,M8,DIN125,ZAB	1
20	1283021GT	NUT,NYLOCK,M6-1.0,DIN985,10,ZAB	1
21	825355GT	WASHER,FLAT,M6,DIN125,ZAB	1
22	826214GT	NUT,TL,M5-0.8,DIN980,10,ZAB	2
23	826215GT	WASHER,FLAT,M5,DIN125,ZAB	2
24	231513GT	NUT,TL FLG,M6-1.0,DIN6927,10,Z	1
25	111029GT	ALTERNATOR,65 AMP,PERKINS 404	1
26	88846GT	HOSE,AIR INLET	1
27	63463GT	AIR CLEANER,NELSON***	1

522.1 Perkins 404D-22, View 2

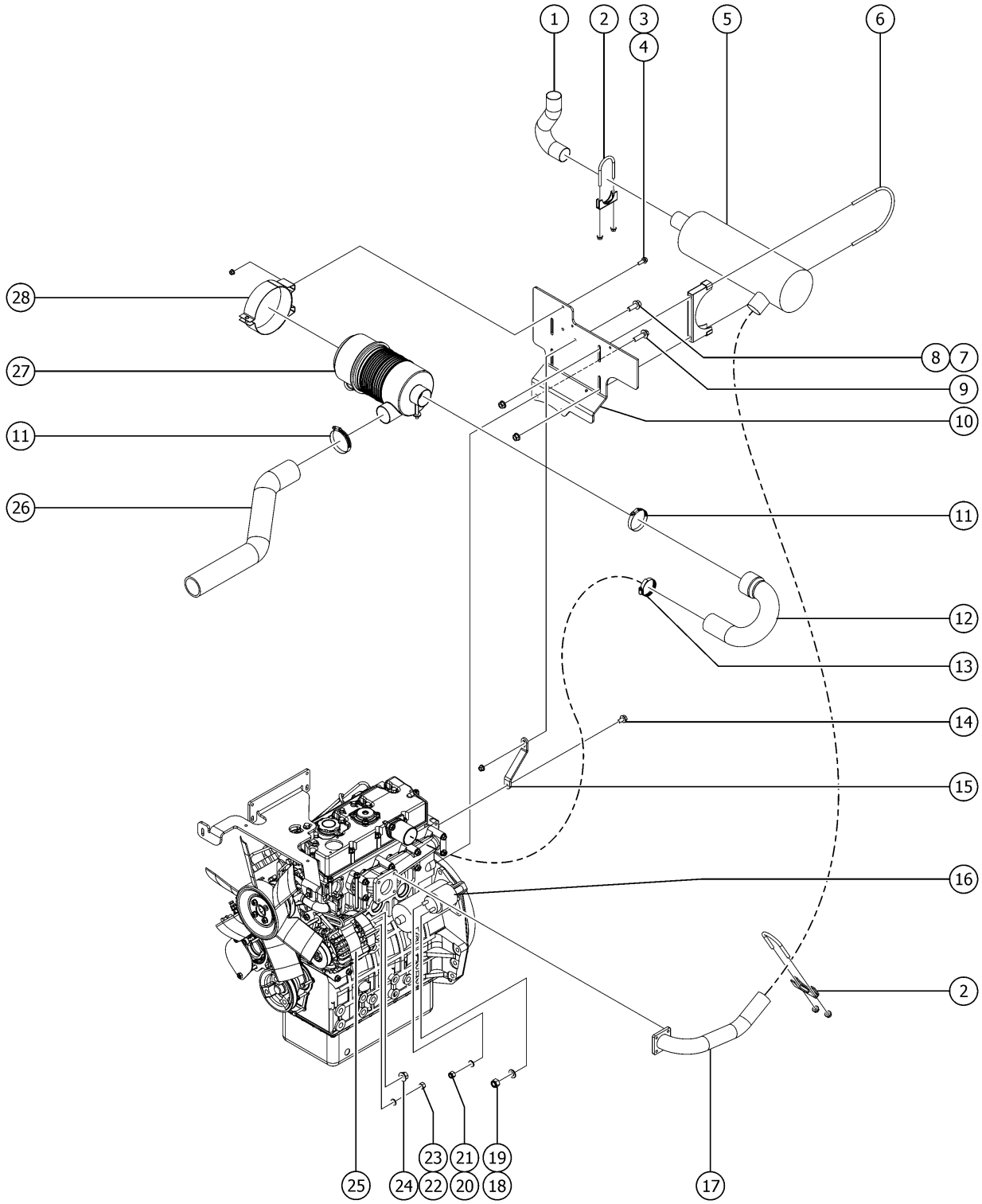

522.1 Perkins 404D-22, View 2

Item	*Part No.*	*Description*	*Qty.*
27-	62420GT	FILTER, AIR D2.9L4	
28	53952GT	BRKT,AIR CLEANER ORIENTATION**	1
27-	65810GT	BAFFLE, AIR CLEANER (27915)**	
27-	52866GT	EVACUATOR VALVE-AIR CLEANER	
28	53952GT	BRKT,AIR CLEANER ORIENTATION**	1

523.1 Perkins 404D-22, View 3

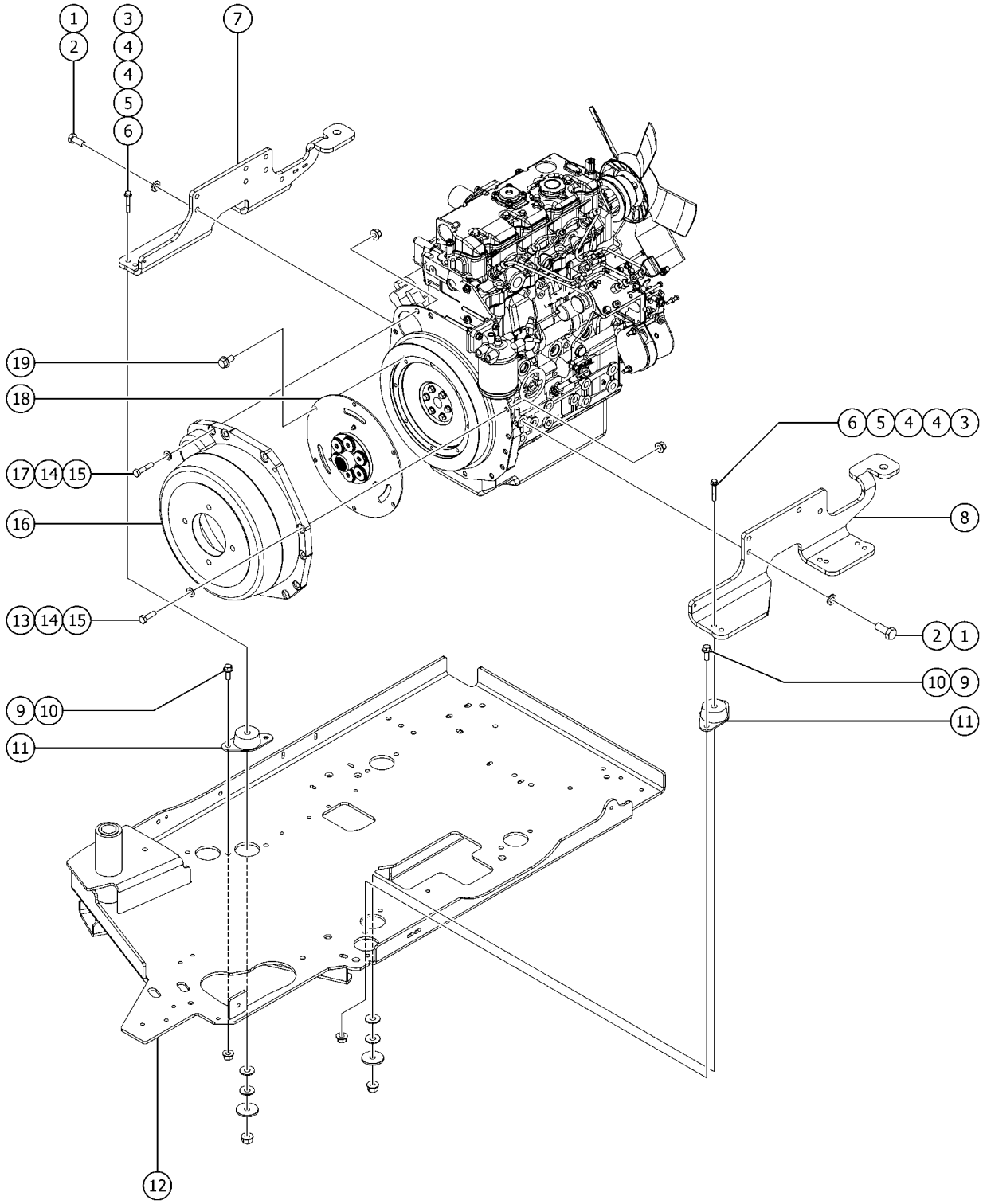

523.1 Perkins 404D-22, View 3

Item	Part No.	Description	Qty.
A		For internal engine parts, contact engine dealer	
1	1257705GT	SCREW,HHC,M14-1.5X35,DIN961,10	10
2	1257810GT	WASHER,FLAT,M14,DIN6916,HRD,ZAB	10
3	1295334GT	TERM QC TAB - #8 RING, .250, 45 DEG, BRASS	4
4	1255760GT	WASHER,FLAT,1/2,USS,ZAG	8
5	1256283GT	WASHER,FLAT,.5X2.25X.188,ZAG	4
6	1251997GT	NUT,TL FLG,1/2-13,G,ZAG	4
7	161611GT	FORMING, ENGINE MOUNT, PERKINS	1
8	88988GT	FORMING,ENGINE MOUNT RH	1
9	824090GT	SCREW,HHF,3/8-16X1,8,ZAG	8
10	1274322GT	NUT,NYLOCK FLG,3/8-16,F,ZAG	8
11	70452GT	ISOLATOR,ENGINE VIBRATION	4
12		REF. ENGINE TRAY refer to 528.1	
13	1257776GT	SCREW,HHC,M10-1.5X35,DIN933,10.9,ZAB	3
14	824145GT	WASHER, FLAT, DIN125, M10, ZAB	4
15	231529GT	NUT,TL FLG,M10-1.5,DIN6927,10	4
16	89771GT	HOUSING,PUMP MOUNT (54573)	1
16B	128022GT	KIT,FBA STYLE COUPLER,PERKINS includes 15-tooth coupler (128003), fastener kit (1263209) and grease	
17	1257707GT	SCREW,HHC,M10-1.5X50,DIN931,10	2
18	128003GT	COUPLER,15 TOOTH,FBA,PERKINS**	1
19	1251983GT	SCREW,HHF,M8-1.25X16,DIN6921,10.9,ZAB	6

524.1 Perkins 404D-22, View 4

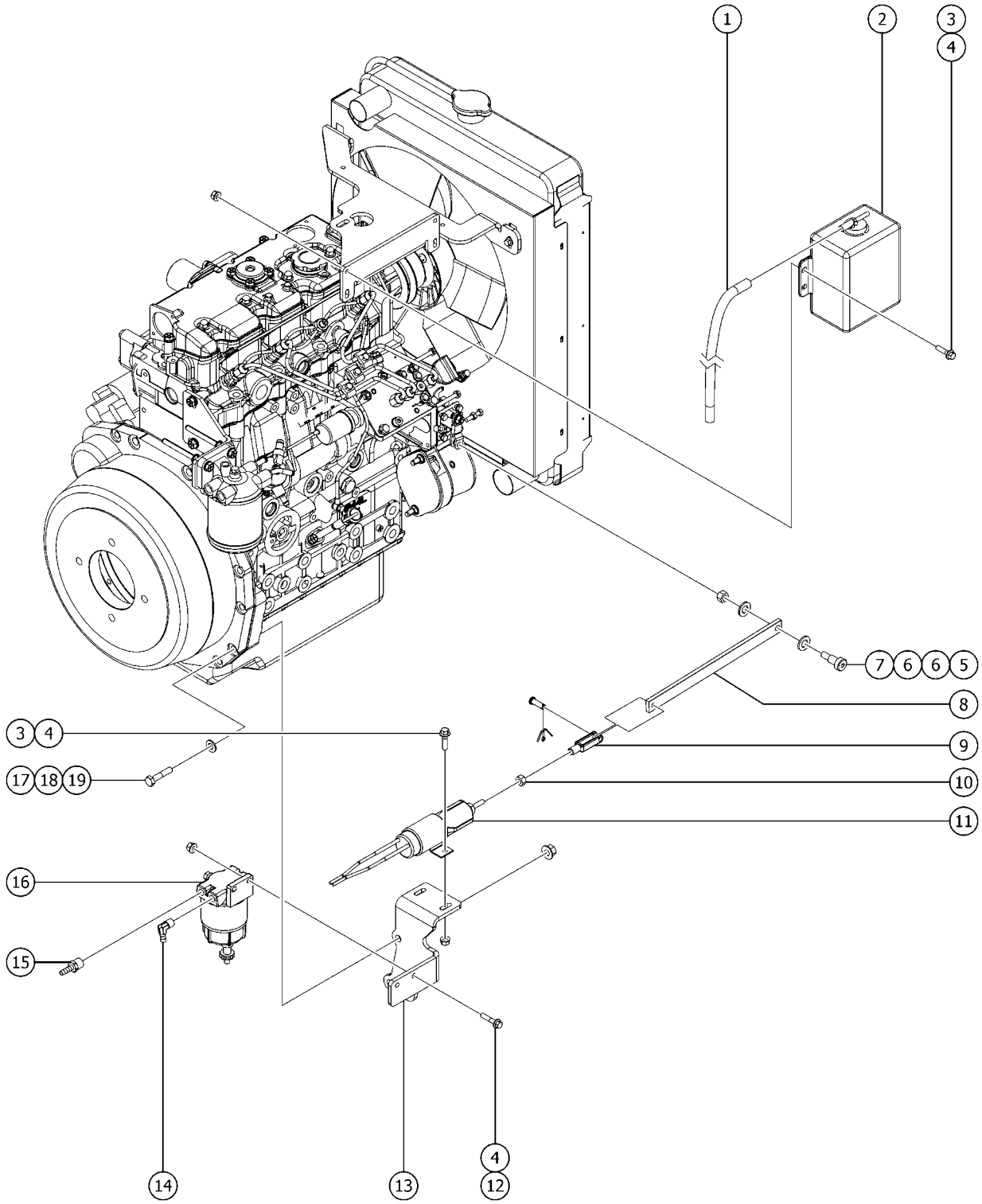

524.1 Perkins 404D-22, View 4

Item	Part No.	Description	Qty.
A		For internal engine parts, contact engine dealer	
1	106226GT	TUBING,VINYL,1/2" CLEAR	1
2	70367GT	BOTTLE,COOLANT RECOVERY,3.7***	1
3	824079GT	SCREW,HHF,1/4-20X1,8,ZAG	8
4	824027GT	NUT, TL FLG, 1/4-20, G, ZAG	8
5	1258824GT	BOLT,SHS,8X12XM6-1.0,ISO7379,12.9,ZAB	1
6	824144GT	WASHER,FLAT,M8,DIN125,ZAB	2
7	1256455GT	NUT,TL,M6-1.0,DIN980,10,ZAB	1
8	89953GT	FLATBAR,ALUM,THROTTLE LINKAGE	1
9	21130GT	CLEVIS YOKE-1/4-28,PLTD W/PIN	1
10	824041GT	NUT, 1/4-28, 8, ZAG	1
11	77402GT	SOLENOID,THROTTLE ACTUATOR DSL	1
12	824080GT	SCREW, HHF, 1/4-20 X 1.25, 8, ZAG	2
13	128588GT	FORMING,SOLENOID MOUNT	1
14	54205GT	HOSE END,BARB,1/4 MNPTX5/16,90	1
15	54437GT	HOSE END,BARB,1/4 MNPTX5/16,ST	1
16	147826GT	SEPRTR/FLTR,FUEL DSL,15GPH,.30	1
16-	62433GT	FILTER,ELEMENT,30 MIC,75020 (included with filter assembly)	
17	1257706GT	SCREW,HHC,M10-1.5X70,DIN931,10	4
18	824145GT	WASHER, FLAT, DIN125, M10, ZAB	4
19	231529GT	NUT,TL FLG,M10-1.5,DIN6927,10	4

525.1 Perkins 404F-E22T, View 1

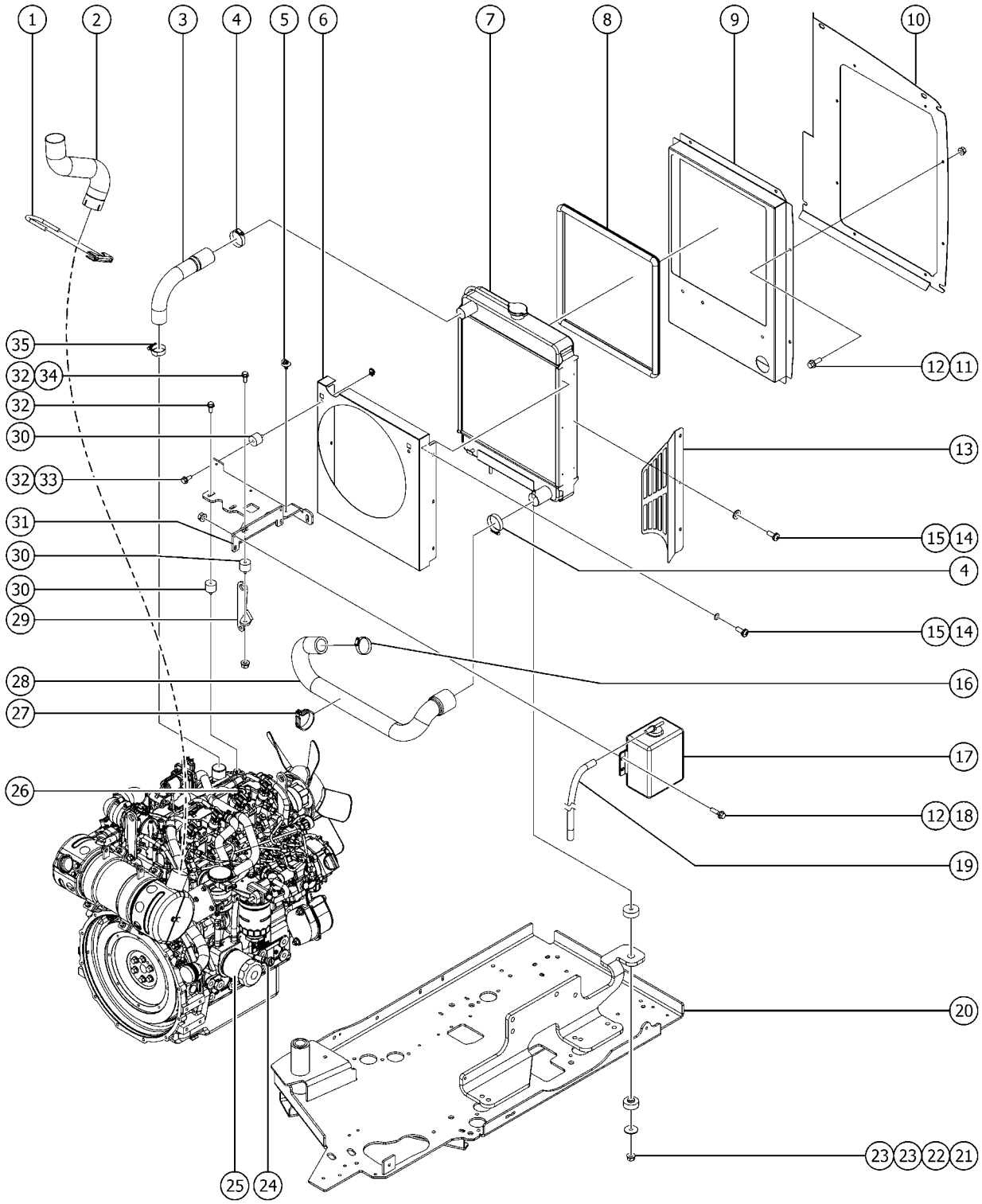

525.1 Perkins 404F-E22T, View 1

Item	Part No.	Description	Qty.
A-		Due to Tier 4 regulations, many engine replacement parts require the engine serial number at time of order placement. When ordering engine parts please have both machine and engine serial numbers available. For internal engine parts, contact engine dealer	
B-	1252940GT	STARTER,PERKINS 404F	1
B-	1252942GT	PUMP,WATER,PERKINS 404F	1
B-	77482GT	PULLEY, WATER PUMP	1
B-	1251819GT	GASKET,EXHAUST MANIFOLD,PERK	1
B-	128991GT	THERMOSTAT	1
B-	147355GT	GASKET-THERMOSTAT HSG Engine block Thermostat	
B-	77477GT	GASKET,THERMOSTAT HSG Vertical Thermostat	
1	102121GT	CLAMP,MUFFLER,1-7/8 IN.	1
2	1283125GT	TAILPIPE, MUFFLER, PERKINS 404F-E22T	1
3	54578GT	HOSE,UPPER RADIATOR,PERKINS	1
4	22672GT	CLAMP,HOSE,1.75	2
5	110149GT	CABLE TIE,DFT MOUNT,BLK,6.5"	3
6	88990GT	SHROUD,FAN	1
7	110304GT	RADIATOR,FORD/PERKINS***	1
7-	65473GT	CAP,RADIATOR,PERKINS/FORD	
8	1257685GT	TRIM SEAL,RADIATOR,PERKINS	1
9	822697GT	SHROUD, RADIATOR, 404F-22	1
10	822695GT	BAFFLE, AIR INTAKE, S60	1
11	824078GT	SCREW,HHF,1/4-20X.75,8,ZAG	8
12	824027GT	NUT, TL FLG, 1/4-20, G, ZAG	12
13	215917GT	NUT,SERRATED,5/16-18,8,ZAG	1
14	824220GT	SCREW,PHPM SEMS ET,10-24X.5,ZA	9
15	1253185GT	WASHER,FLAT,#10,USS,ZAG	9
16	35434GT	CLAMP,HOSE,2.00***	1
17	70367GT	BOTTLE,COOLANT RECOVERY,3.7***	1
18	824079GT	SCREW,HHF,1/4-20X1,8,ZAG	4

525.1 Perkins 404F-E22T, View 1

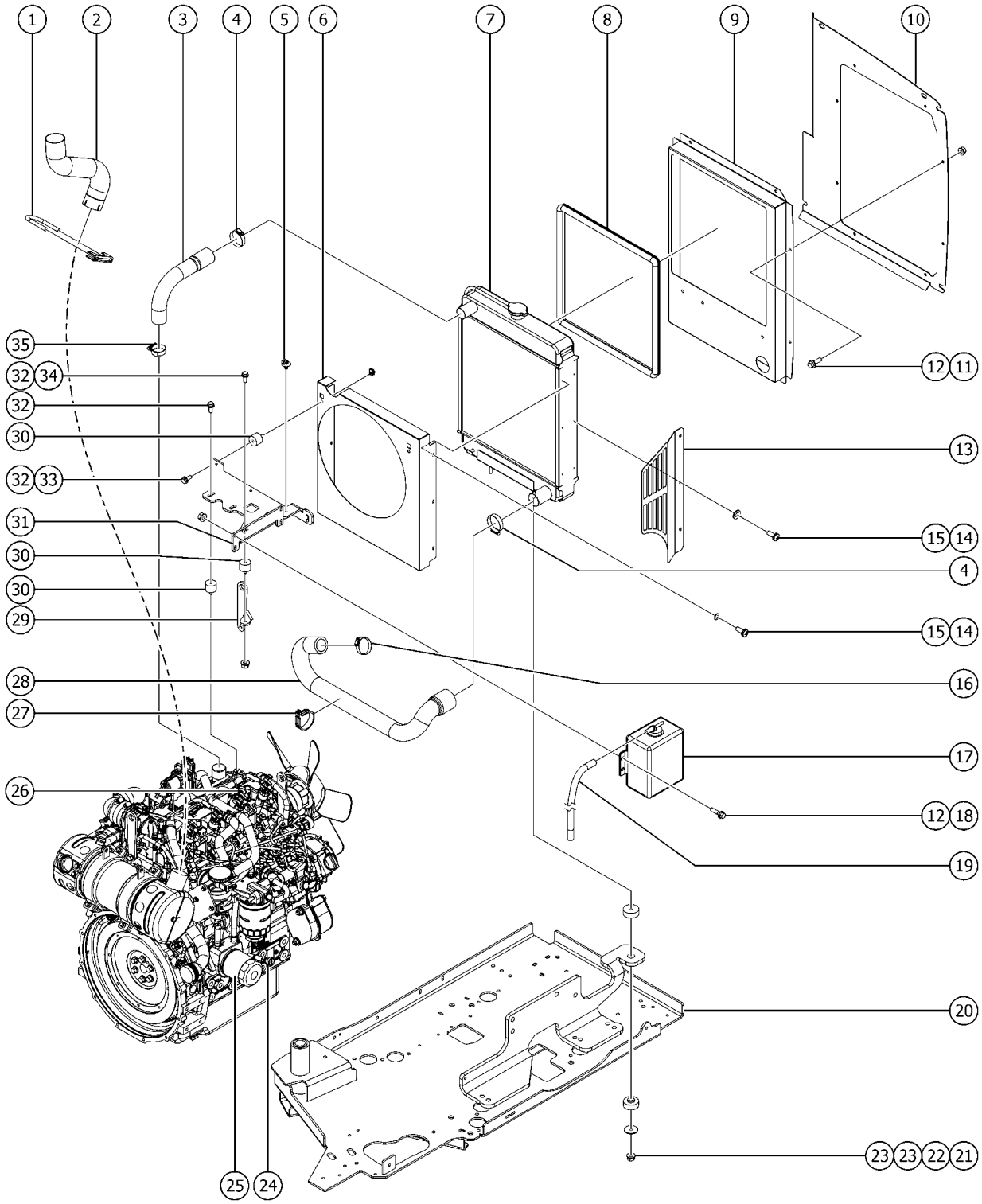

525.1 Perkins 404F-E22T, View 1

Item	Part No.	Description	Qty.
19	106226GT	TUBING,VINYL,1/2" CLEAR	1
20		REF. ENGINE TRAY refer to 528.1	
21	824029GT	NUT, TL FLG, 3/8-16, G, ZAG	2
22	824120GT	WASHER, FLAT, .375 X 1.50 X .125, ZAG	2
23	24038GT	SHOCK MOUNT,SMALL	4
24	128984GT	DIPSTICK, STRAIGHT SHORT	1
24-	128985GT	DIPSTICK TUBE, STRAIGHT SH	
25	94762GT	OIL FILTER - PERKINS	1
26	65636GT	CAP, OIL FILLER	1
26-	65638GT	SEAL, OIL FILLER CAP	
27	6653GT	CLAMP, 1.88, #30 X 1/4, RUB CUSH	1
28	1283181GT	HOSE,LOWER RADIATOR,PERKINS 404F-E22T	1
29	1284549GT	FORMING,UPPER RADIATOR SUPPORT/ENGINE LIFT POINT, 404F-E22T	1
30	60585GT	ISOLATOR,VIBRATION,M8 MALE/FEM	5
31	1284548GT	FORMING,UPPER RADIATOR SUPPORT,PERKINS 404F-E22T	1
32	824132GT	SCREW,HHF,M8-1.25X20,DIN6921,10.9,ZAB	5
33	230820GT	SPRING CLIP, M8-1.25, 0.8-4.0 X 13, ZAB	2
34	237832GT	NUT,TL FLG,M8-1.25,DIN6927,10,ZAB	1
35	119053GT	CLAMP,HOSE,1.50	1

526.1 Perkins 404F-E22T, View 2

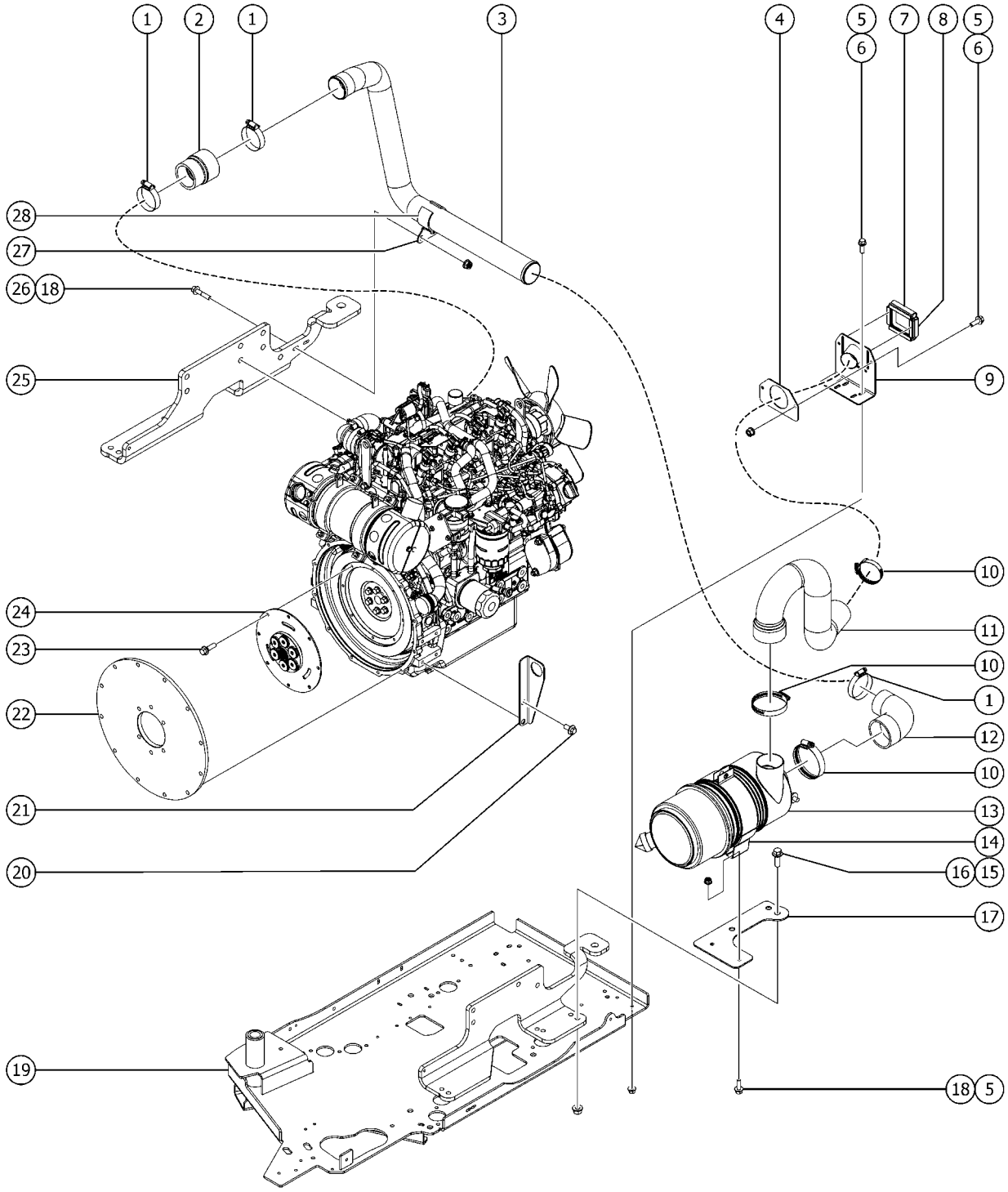

526.1 Perkins 404F-E22T, View 2

Item	Part No.	Description	Qty.
A		Due to Tier 4 regulations, many engine replacement parts require the engine serialnumber at time of order placement. When ordering engine parts please have both machine and engine serial numbers available. For internal engine parts, contact engine dealer	
B	1297346GT	ASSEMBLY, PREFILTER, FUEL, PERKINS	1
B-	1291205GT	FILTER, PRIMARY, FUEL, PERKINS	
1	35434GT	CLAMP,HOSE,2.00***	3
2	1253487GT	ADAPTER, 2" TO 1.8", PERK 404F	1
3	1283168GT	TUBE, INTAKE AIR PIPE, PERKINS 404F-E22T	1
4	1253990GT	SHEET,AIR SEAL BACKING	1
5	824078GT	SCREW,HHF,1/4-20X.75,8,ZAG	6
6	824027GT	NUT, TL FLG, 1/4-20, G, ZAG	4
7	1257736GT	SEAL,AIR INTAKE ADAPTER	2
8	1257737GT	SEAL,AIR INTAKE ADAPTER,SIDE	2
9	1254017GT	WDMT,INTAKE ADAPTER,404F	1
10	45435GT	CLAMP,HOSE,2.50"	3
11	215912GT	COLD AIR HOSE, PERK 404F-22	1
12	1287116GT	ADAPTER, ELBOW, 2IN X 2.5IN	1
13	63463GT	AIR CLEANER,NELSON***	1
13-	52866GT	EVACUATOR VALVE-AIR CLEANER	
13-	58415GT	CLIP,AIR CLEANER END CAP***	
13-	62420GT	FILTER, AIR D2.9L4 end cap not available separately	
13-	65810GT	BAFFLE, AIR CLEANER (27915)**	
14	53952GT	BRKT,AIR CLEANER ORIENTATION**	1
15	1253498GT	SCREW,HHF,1/2-13X1.5,8,ZAG	1
16	1274172GT	NUT,NYLOCK FLG,1/2-13,G,ZAG	1
17	215472GT	PLATE, AIR CLEANER, 404F-22	1
18	1277924GT	NUT,NYLOCK FLG,1/4-20,F,ZAG	4
19		REF. ENGINE TRAY refer to 528.1	
20	231087GT	SCREW,HHF,M12-1.75X25,DIN6921,10.9,ZAB	2

526.1 Perkins 404F-E22T, View 2

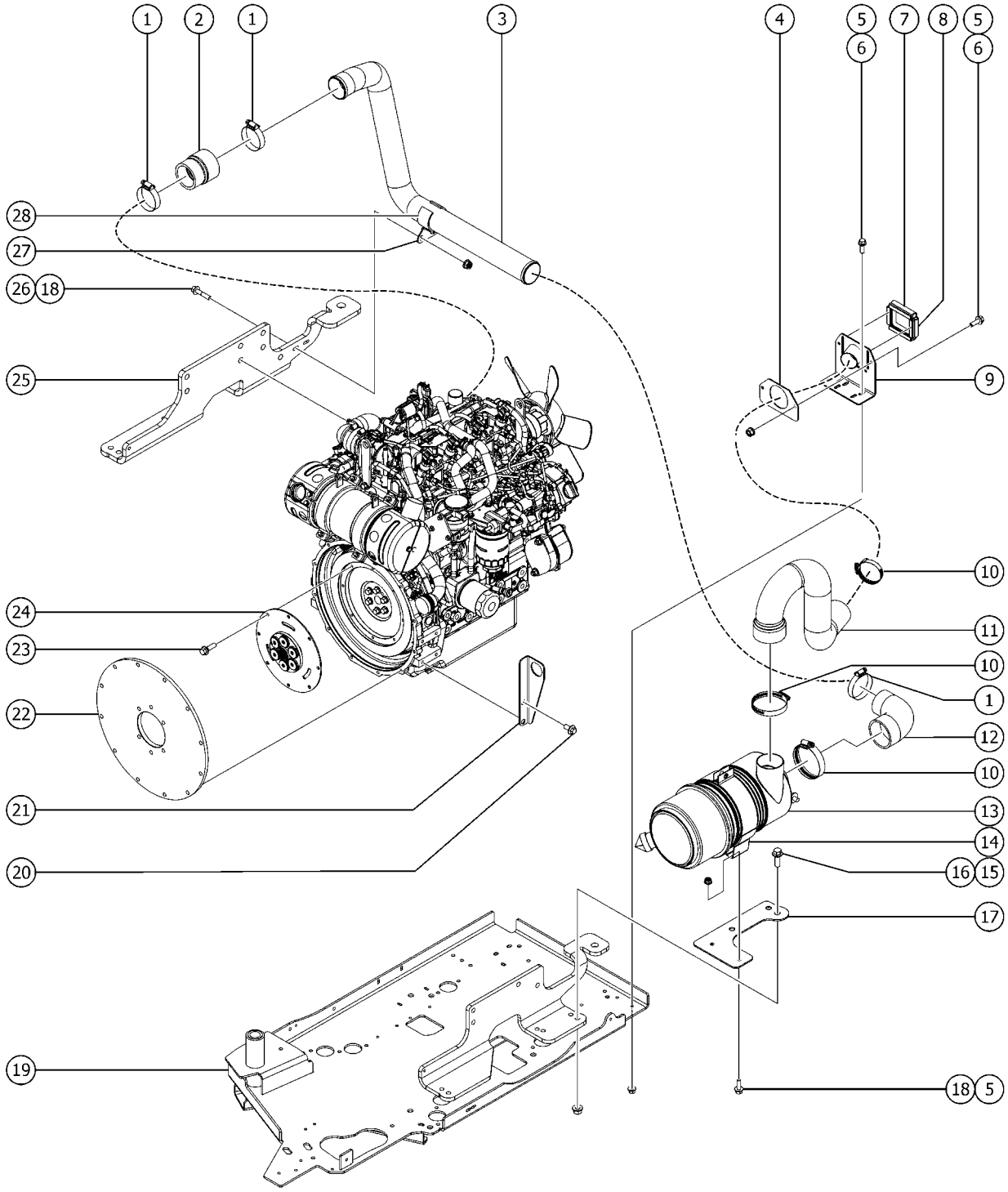

526.1 Perkins 404F-E22T, View 2

Item	Part No.	Description	Qty.
21	1286546GT	ECU HARNESS BRACKET, PERKINS 404F-E22T	1
22	1283182GT	PUMP MOUNT, PERKINS 404F-E22T	1
23	824086GT	SCREW, HHF, 5/16-18 X 1, 8, ZAG	8
24	1283279GT	COUPLER,15 TOOTH,FBA,PERKINS 404F-E22T	1
25		REF. FORMING ENGINE MOUNT refer to 525.1	
26	824080GT	SCREW, HHF, 1/4-20 X 1.25, 8, ZAG	2
27	1287139GT	FORMING, PIPE SUPPORT	1
28	1287140GT	RUBBER, PIPE CUSHION	1
28-	35434GT	CLAMP,HOSE,2.00***	1

527.1 Perkins 404F-E22T, View 3

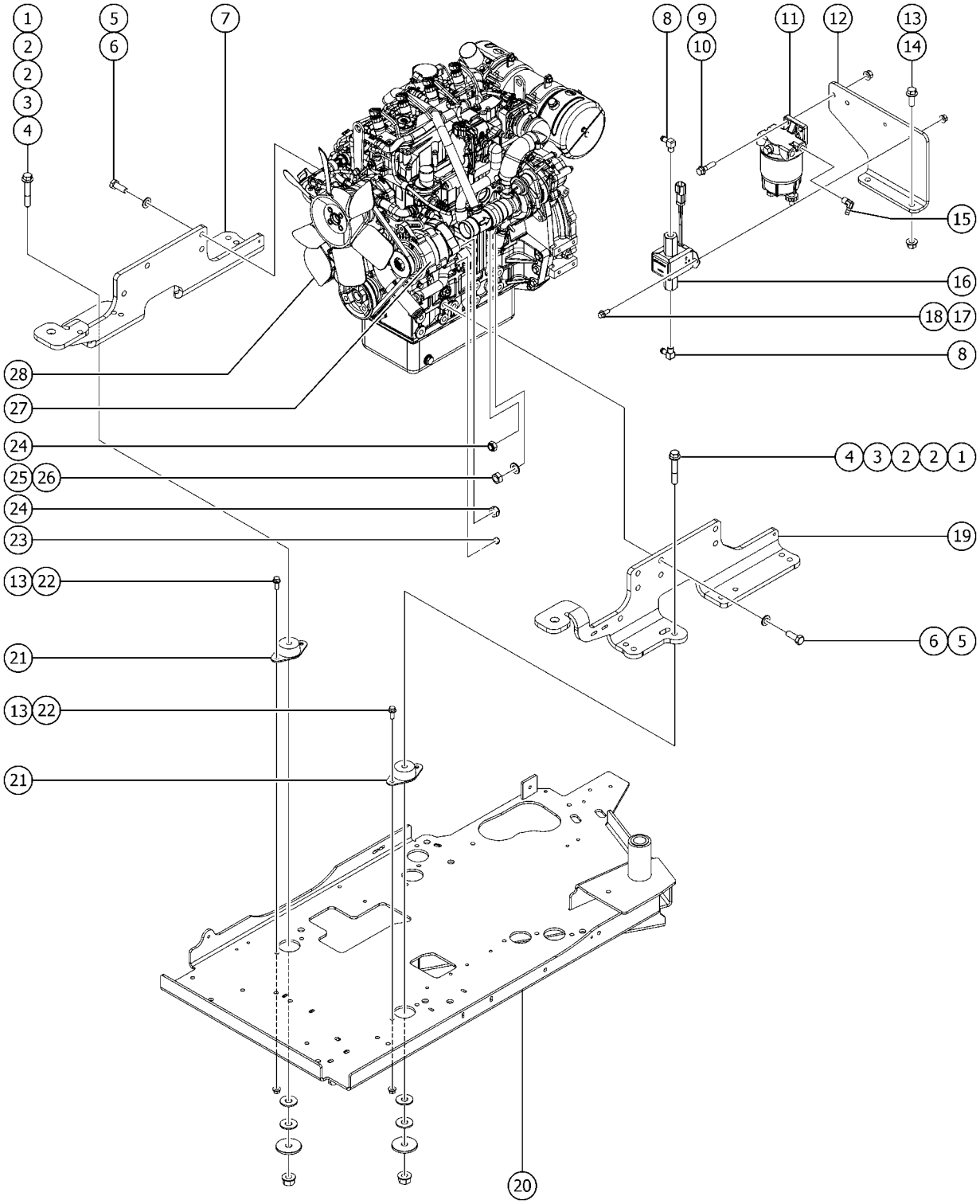

527.1 Perkins 404F-E22T, View 3

Item	Part No.	Description	Qty.
A		Due to Tier 4 regulations, many engine replacement parts require the engine serialnumber at time of order placement. When ordering engine parts please have both machine and engine serial numbers available. For internal engine parts, contact engine dealer	
1	1295334GT	TERM QC TAB - #8 RING, .250, 45 DEG, BRASS	4
2	1255760GT	WASHER,FLAT,1/2,USS,ZAG	8
3	1256283GT	WASHER,FLAT,.5X2.25X.188,ZAG	4
4	1274172GT	NUT,NYLOCK FLG,1/2-13,G,ZAG	4
5	1257705GT	SCREW,HHC,M14-1.5X35,DIN961,10	10
6	1257810GT	WASHER,FLAT,M14,DIN6916,HRD,ZAB	10
7	88988GT	FORMING,ENGINE MOUNT RH	1
8	38922GT	ELBOW,90DEG.1/8MPT-5/16 BARB	2
8-	21465GT	CLAMP,HOSE, .25" TO .63" X .3125"	
9	824087GT	SCREW, HHF, 5/16-18 X 1.25, 8, ZAG	2
10	824028GT	NUT,TL FLG,5/16-18,G,ZAG	2
11	75020GT	SEPRTR/FLTR,FUEL DSL,15GPH,.30	1
11-	62433GT	FILTER,ELEMENT,30 MIC,75020	
12	1285224GT	BRACKET, FUEL PUMP, PERKINS 404F-E22T	1
13	824090GT	SCREW,HHF,3/8-16X1,8,ZAG	10
14	824029GT	NUT, TL FLG, 3/8-16, G, ZAG	2
15	54205GT	HOSE END,BARB,1/4 MNPTX5/16,90	2
15-	21465GT	CLAMP,HOSE, .25" TO .63" X .3125"	
16	1285222GT	FUEL PUMP,LIFT,PERKINS 404F-E22T	1
17	1256855	SCREW,HHF,1/4-20X.625,8,ZAG	2
18	824027GT	NUT, TL FLG, 1/4-20, G, ZAG	2
19	161611GT	FORMING, ENGINE MOUNT, PERKINS	1
20		REF. ENGINE TRAY refer to 528.1	
21	70452GT	ISOLATOR,ENGINE VIBRATION	4
22	1274322GT	NUT,NYLOCK FLG,3/8-16,F,ZAG	8
23	27082GT	NUT,NYLOCK,M5X.80	2

527.1 Perkins 404F-E22T, View 3

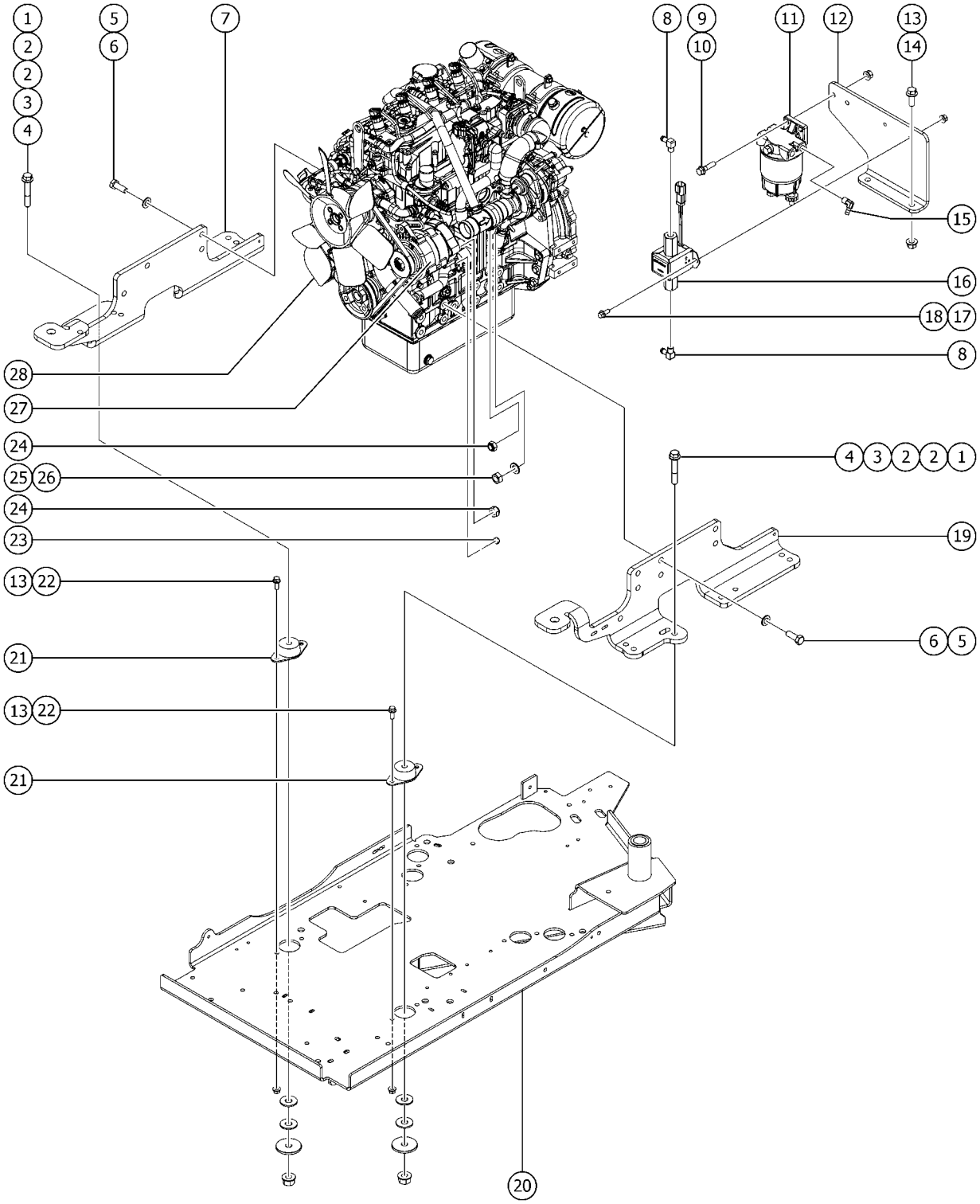

527.1 Perkins 404F-E22T, View 3

Item	*Part No.*	*Description*	*Qty.*
24	49364GT	NUT,NYLOCK,M6X1.00	2
25	22571GT	NUT,HEX,M8 X 1.25	1
26	33277GT	WASHER,FLAT,M8,YELLOW ZINC	1
27	1251814GT	ALTERNATOR - 85 AMP, INT REGU	1
28	77483GT	FAN, ENGINE (104-22)(404-22)*	1
28-	1252943GT	SPACER,FAN,PERKINS 404F	

528.1 Engine Tray

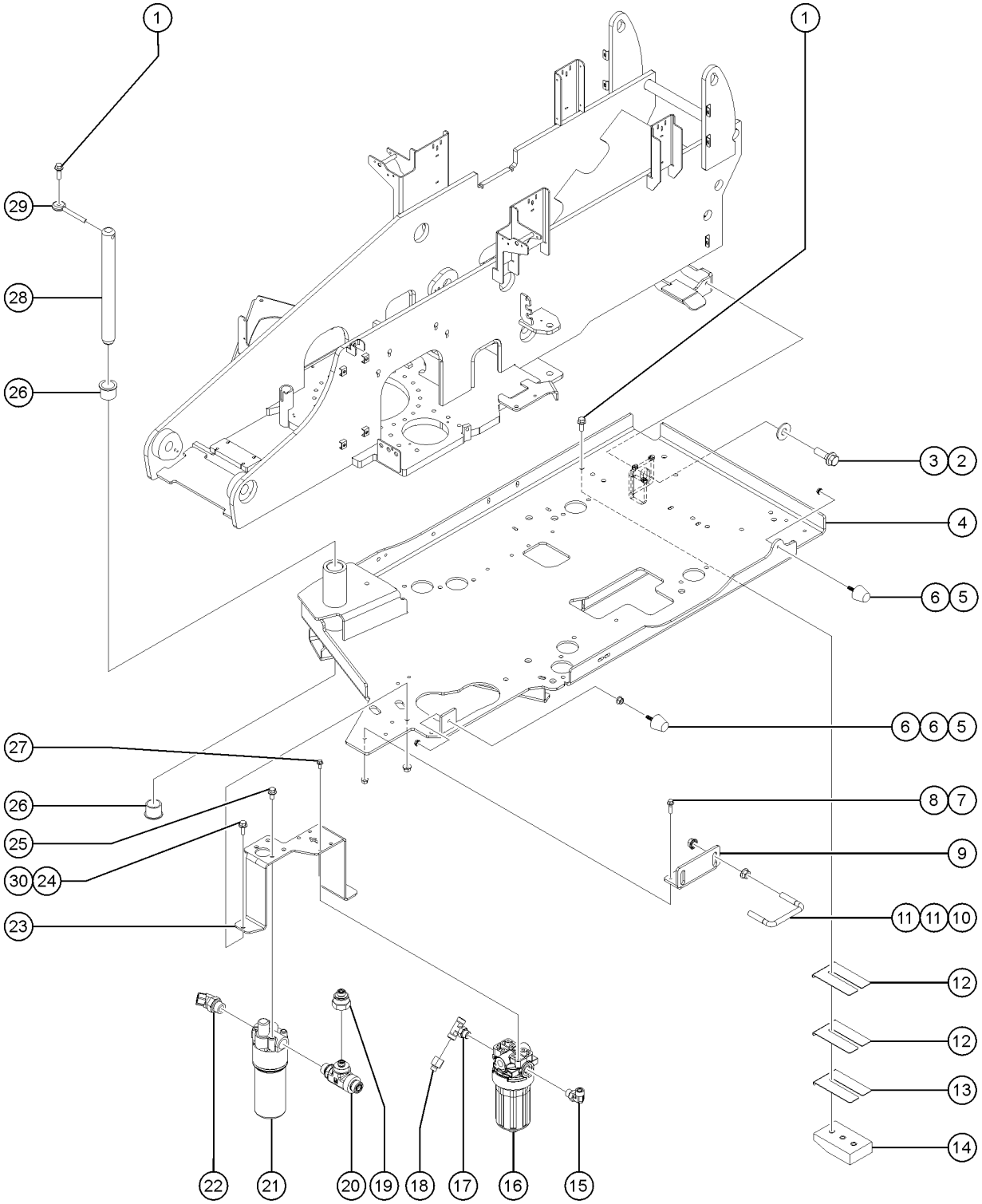

528.1 Engine Tray

Item	Part No.	Description	Qty.
1	824091GT	SCREW, HHF, 3/8-16 X 1.25, 8, ZAG	4
2	1256126GT	SCREW,HHF,5/8-11X2,8,ZAG	1
3	824115GT	WASHER,FLAT,5/8,USS,ZAG	1
4	1283145GT	WELDMENT, ENGINE TRAY WITH BEARINGS	1
5	1261277GT	RUBBER BUMPER, 1.25 X 1.25 IN	2
6	1255805GT	NUT,SERRATED,5/16-18,8,ZAG	3
7	824079GT	SCREW,HHF,1/4-20X1,8,ZAG	3
8	1277924GT	NUT,NYLOCK FLG,1/4-20,F,ZAG	3
9	1260174GT	FORMING, ENGINE TRAY LATCH	1
10	1259855GT	UBOLT, 0.4724 IN D X 4 IN L	1
11	1261724GT	NUT,SERRATED,1/2-13,8,ZAG	4
12	34344GT	SHIM, PAD, 3 x 5	2
13	38621GT	SHIM, PAD, 5 x 3	1
14	81522GT	WEAR PAD, ENGINE TRAY	1
14-	48425GT	NUT,FLG-LRG,3/8-16,YZ	
15	48932GT	FITTING,ELBOW,90D,520220-8***	1
16	1267807GT	ASSEMBLY, MED. PRESS. FILTER, SAE8	1
16-	1268229GT	ELEMENT-5 MIC, PAPER, W/ BYPASS	
17	48936GT	TEE,BRANCH,520429-8	1
18	48941GT	REDUCER,520123-8-4	1
19	87033GT	REDUCER,520123-12-6 (from SN S60XCH-46909) (from SN S65XCH-46909)	1
20	1279568GT	TEE, RUN, 12-12-6 WITH CHECK (to SN S60XCH-46908) (to SN S65XCH-46908)	1
20B	48961GT	TEE,RUN,520428-12 (from SN S60XCH-46909) (from SN S65XCH-46909)	1
21	60334GT	FILTER ASSY,HIGH PRESS SAE-12*	1
21-	1279465GT	BACKUP RING,71.60X67.20X1.40PTFE(60334)	
21-	1279466GT	O-RING,67.95X2.62-NBR-70SH(HF2P)(60334)	
21-	58380GT	FILTER INDICATOR-(60334)	
21-	60857GT	FILTER,ELEMENT,BETA(5)=1000	

528.1 Engine Tray

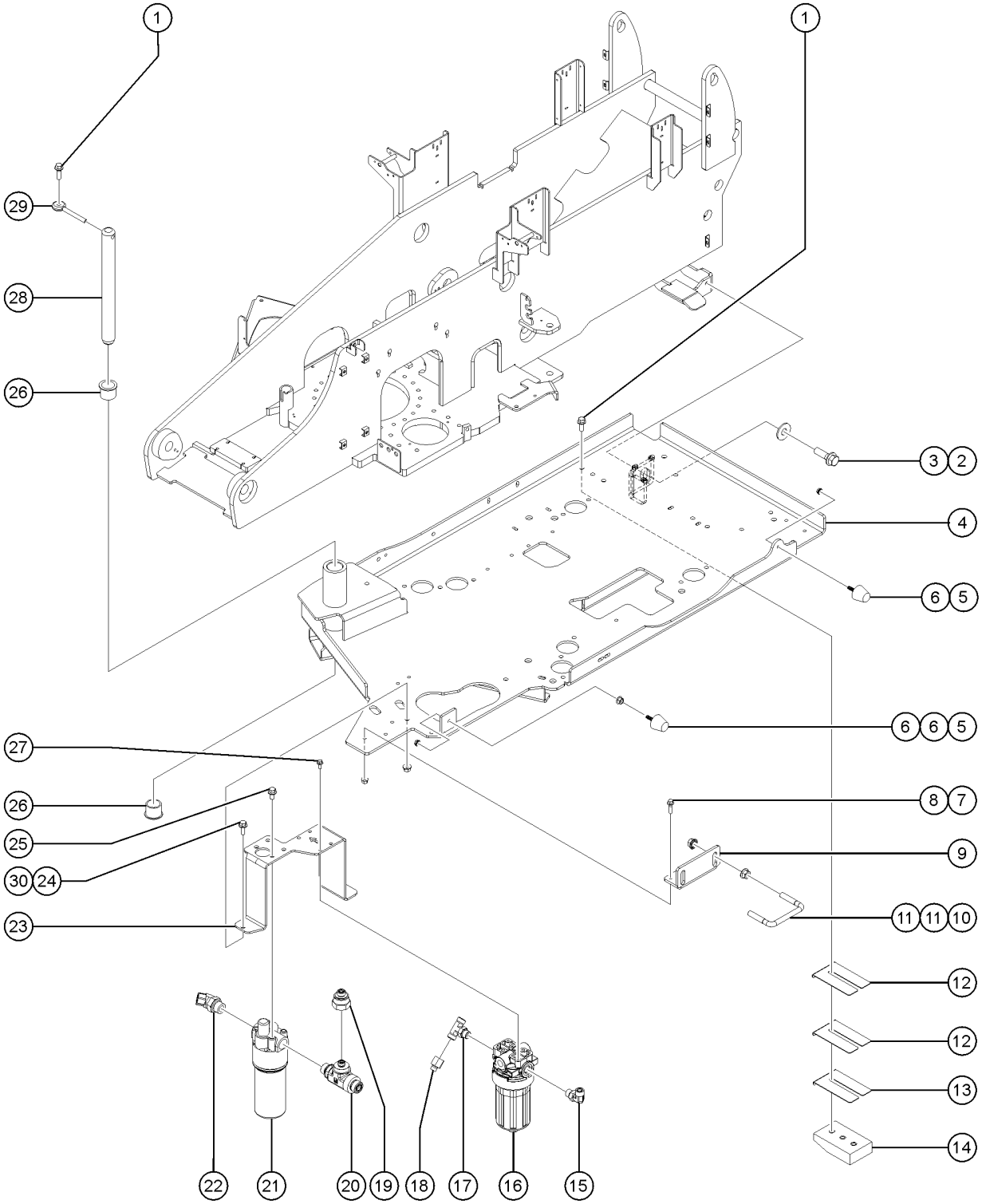

528.1 Engine Tray

Item	Part No.	Description	Qty.
22	48963GT	FITTING,ELBOW,45D,520320-12***	1
23	1280862GT	FORMING, BRACKET, FILTER MOUNT	1
24	1274322GT	NUT,NYLOCK FLG,3/8-16,F,ZAG	2
25	824089GT	SCREW, HHF, 3/8-16 X .75, 8, ZAG	4
26	35675GT	BEARING,FL,1.25IDX1.5ODX1.25L	2
27	1256855	SCREW,HHF,1/4-20X.625,8,ZAG	4
28	81724GT	PIN,1.25 X 13.25 IN,CHAMFER	1
29	825019GT	ROD END, .375X3.69, ZAG	1
30	824090GT	SCREW,HHF,3/8-16X1,8,ZAG	2

601.1 Linkage Assembly - View 1

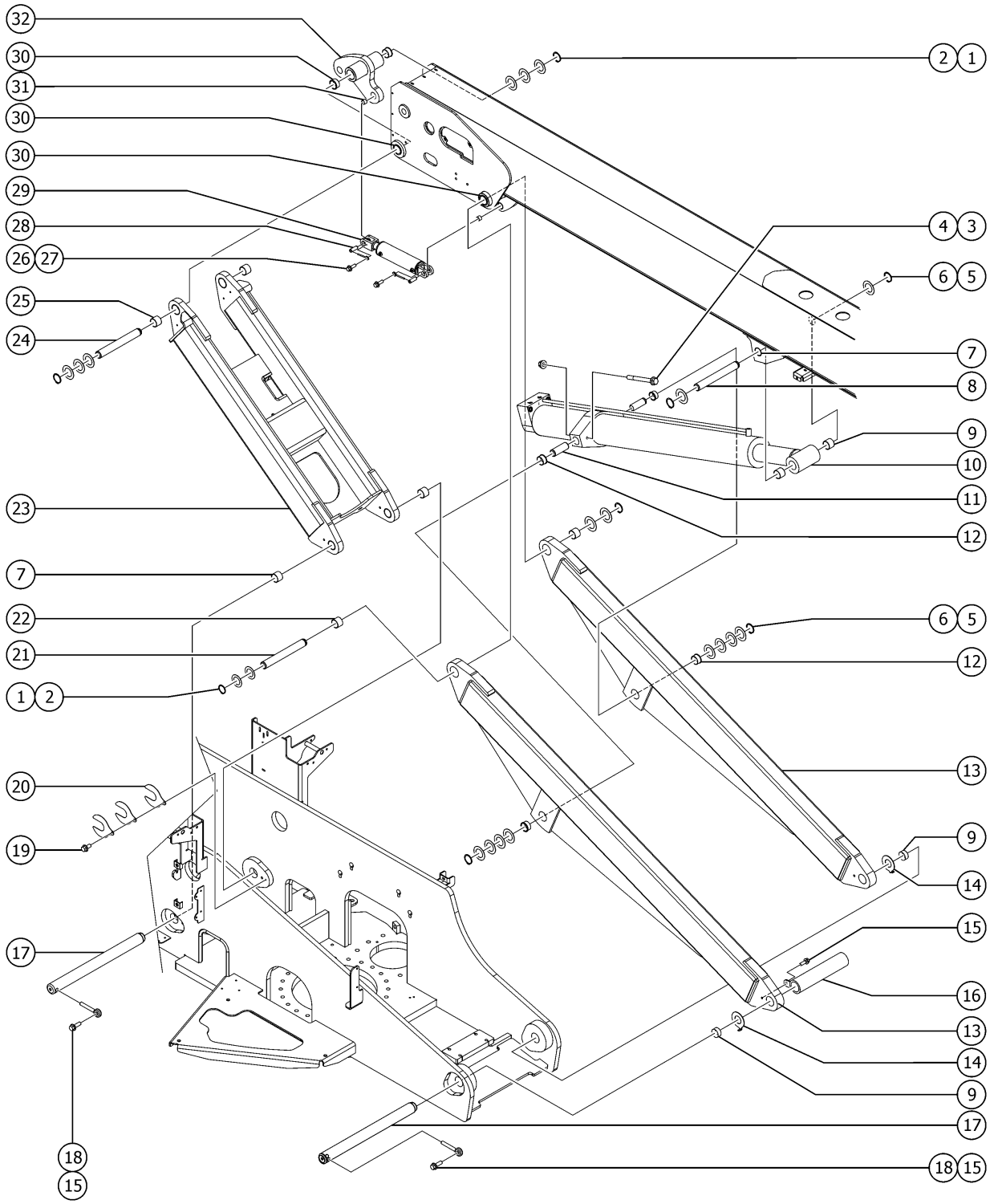

601.1 Linkage Assembly - View 1

Item	Part No.	Description	Qty.
1	1254639GT	SNAP RING,EXTERNAL,2.25,ZAG	4
2	1257080GT	WASHER,FLAT,2.27X3.5X.06,ZAG	10
3	1256107GT	SCREW,HHC,1/2-13X4.5,8,ZAG	2
4	1274172GT	NUT,NYLOCK FLG,1/2-13,G,ZAG	2
5	1253815GT	SNAP RING,EXTERNAL,2.00,ZAG	4
6	1256864GT	WASHER,FLAT,2.01X3.5X.06,ZAG	10
7	18720GT	BEARING,2.0IDX2.25ODX1.50L	4
8	88872GT	PIN,2.00DIAX11.26LG,2RING	1
9	42014GT	BEARING,2.00IDX2.25ODX2.00L	4
10	1276386GT	CYLINDER, LIFT, S60/65XC (inlcudes item 9)	1
10-	1281936GT	SEAL KIT, CYLINDER LIFT	
10-	1273414GT	VALVE,COUNTERBALANCE,CBCB-LHN 3500 V1, (Extend)	
10-	75064GT	VALVE, COUNTERBALANCE, CWCG-LGN.5000 V2, (Extend)	
10-	60984GT	VALVE COUNTERBAL.CBBD-LJN@5000 V3, (Retract)	
10-	42014GT	BEARING,2.00IDX2.25ODX2.00L	2
11	1276428GT	PIN, LIFT CYL, 2.00DIAX,5.1LG, 1 RING, 2 HOLES	2
12	1276424GT	BEARING,FL,2.00IDX2.25ODX.84L	4
13	1276504GT	ASSY,WELDMENT LONG LINK WITH BEARINGS S60/65-XC (includes items 9, 12 and 22)	2
13-	42014GT	BEARING,2.00IDX2.25ODX2.00L	
13-	1276424GT	BEARING,FL,2.00IDX2.25ODX.84L	
13-	106042GT	BEARING,2.25IDX2.50ODX2.00L	
14	1276456GT	FORMING, LINK THRUST WASHER to SN S65XCH-46373	2
15	1253498GT	SCREW,HHF,1/2-13X1.5,8,ZAG	3
16	1276505GT	WELDMENT, LONG LINK SPACER S60/65-XC	1
17	88676GT	PIN,2.00DIAX24.00LG,CHAMFER***	2
18	1256267GT	ROD END,.5 X 3.75,ZAG	2
19	824089GT	SCREW, HHF, 3/8-16 X .75, 8, ZAG	2
20	1262688GT	SHIM, HORSESHOE, 2.00 to SN S65XCH-46373	7

601.1 Linkage Assembly - View 1

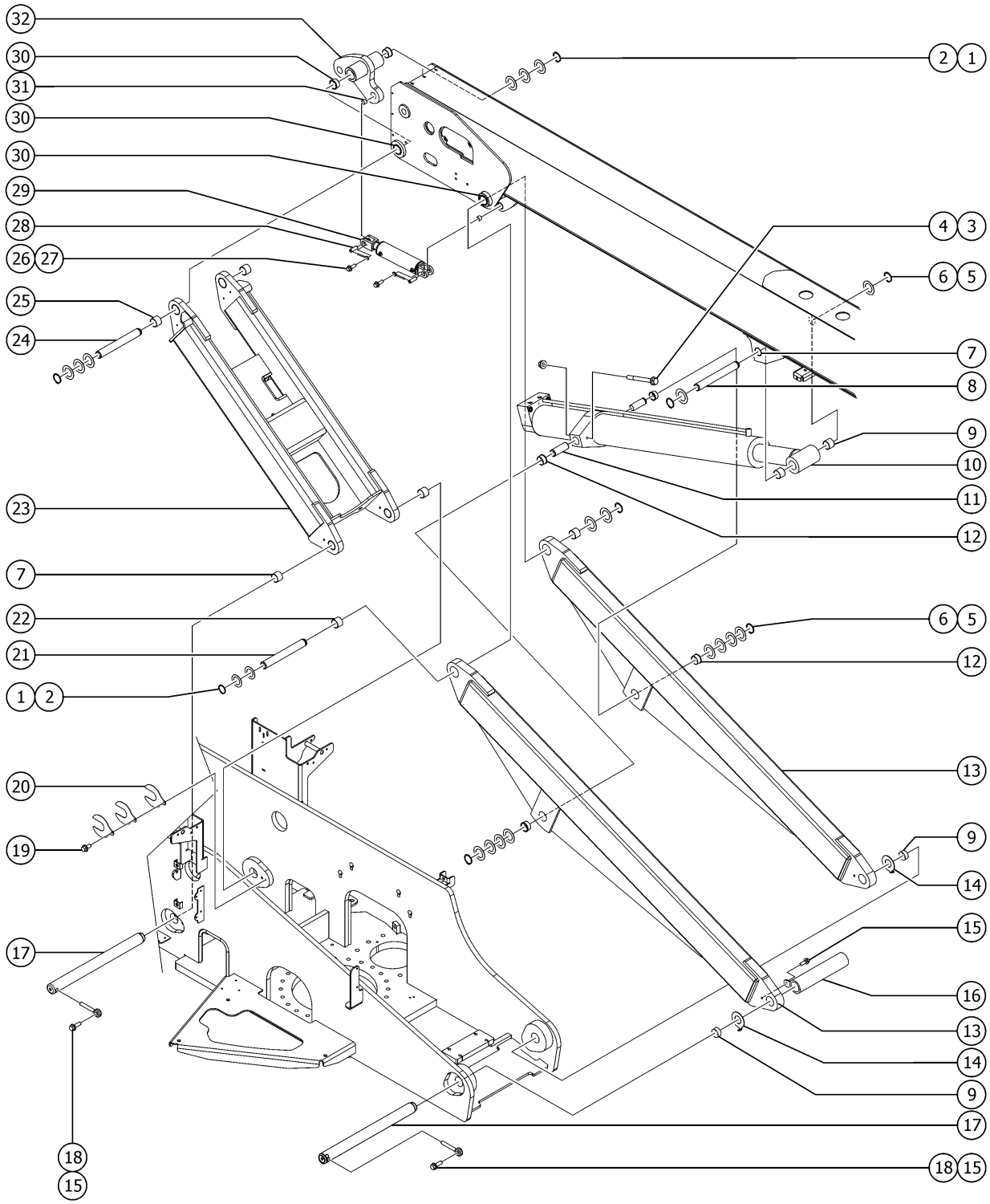

601.1 Linkage Assembly - View 1

Item	Part No.	Description	Qty.
20-	1262688GT	SHIM, HORSESHOE, 2.00 from SN S65XCH-46374	11
21	1276426GT	PIN,2.25 X 19.50LG, 2 RING	1
22	106042GT	BEARING,2.25IDX2.50ODX2.00L	2
23	1276503GT	ASSY,WELDMENT SHORT LINK WITH BEARINGS, S60/65-XC (includes items 7 and 25)	1
23-	18720GT	BEARING,2.0IDX2.25ODX1.50L	
23-	18722GT	BEARING,2.25IDX2.50ODX1.50L***	
24	1276425GT	PIN,2.250 X 18.0,2 RINGS,2 HOLE	1
25	18722GT	BEARING,2.25IDX2.50ODX1.50L***	2
26	824090GT	SCREW,HHF,3/8-16X1,8,ZAG	2
27	1255452GT	ROD END,.375 X 2.25,ZAG	2
28	81599GT	PIN, 1.5DIA X 4.38LG,1HOLE	2
29	1272976GT	CYLINDER, MASTER	1
29-	1279050GT	SEAL KIT, CYLINDER, MASTER	
30	88919GT	BEARING,FL,2.25IDX2.50ODX1.63L	6
31	119619GT	BEARING,1.5 ID X 1.75 ODX1.5L	2
32	1276495GT	ASSY,WELDMENT TIMING LINK CAM WITH BEARINGS (includes items 30 and 31)	1
32-	88919GT	BEARING,FL,2.25IDX2.50ODX1.63L	
32-	119619GT	BEARING,1.5 ID X 1.75 ODX1.5L	

602.1 Linkage Assembly - View 2

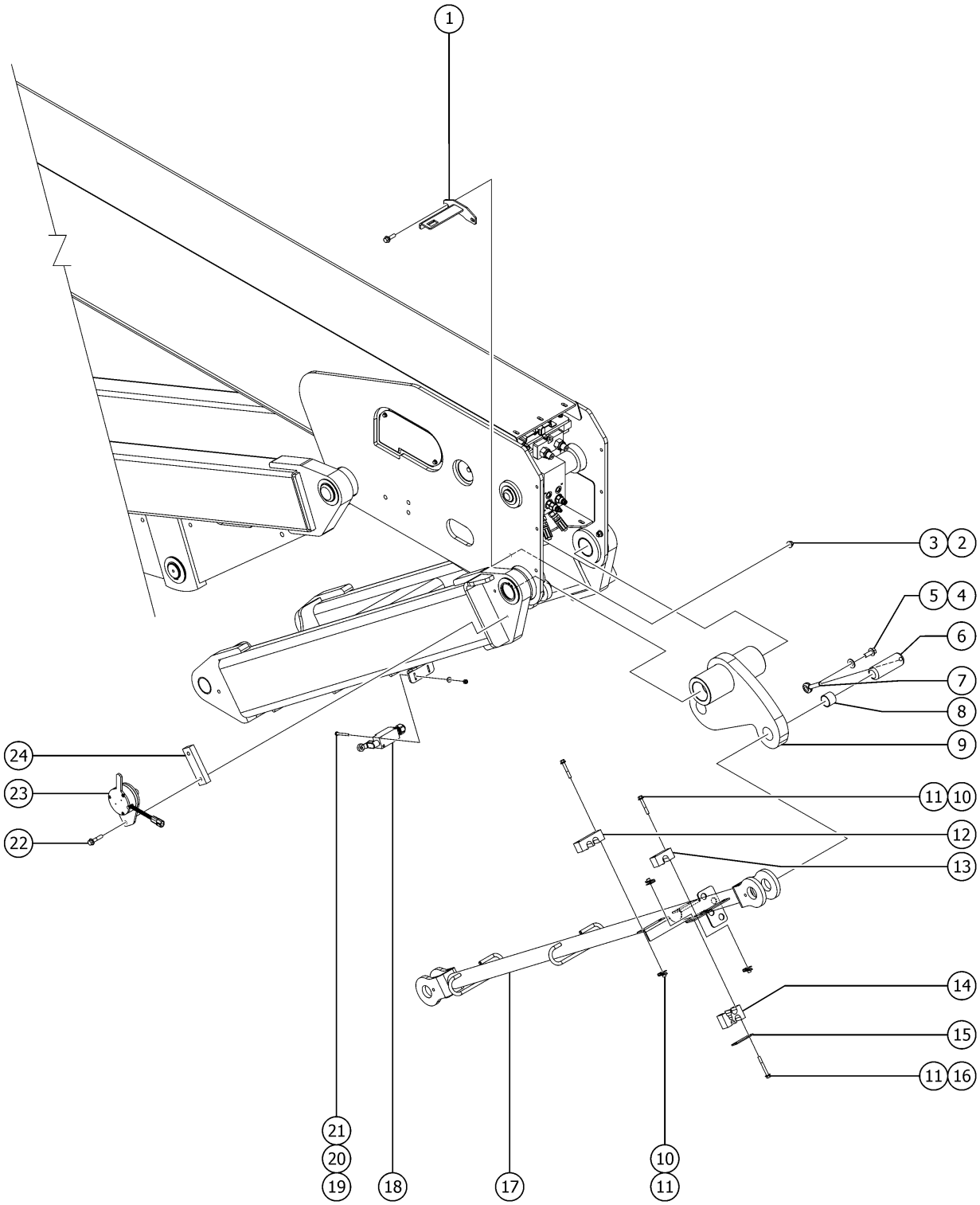

602.1 Linkage Assembly - View 2

Item	Part No.	Description	Qty.
1	1276510GT	WELDMENT,SENSOR RETAINER,PRIMARY	1
2	1274322GT	NUT,NYLOCK FLG,3/8-16,F,ZAG	2
3	824091GT	SCREW, HHF, 3/8-16 X 1.25, 8, ZAG	2
4	824090GT	SCREW,HHF,3/8-16X1,8,ZAG	2
5	826793GT	WASHER,FLAT,3/8,SAE,HRD,ZAG	2
6	81599GT	PIN, 1.5DIA X 4.38LG,1HOLE	2
7	1255452GT	ROD END,.375 X 2.25,ZAG	2
8	119619GT	BEARING,1.5 ID X 1.75 ODX1.5L	2
9		Ref: WELDMENT, TIMING LINK CAM S65-XC, Linkage Assembly Refer to 601.1	
10	824082GT	SCREW, HHF, 1/4-20 X 1.75, 8, ZAG	4
11	56912GT	SPRING CLIP,1/4-20,.025-.15X.54,ZAG	6
12	1276454GT	CLAMP, TIMINGLINK, RH	1
13	1276455GT	CLAMP, TIMINGLINK, LH	1
14	1280841GT	CLAMP, TIMINGLINK, LH	1
15	1276464GT	BAR CLAMP TIMINGLINK	1
16	1257866GT	SCREW,HHF,1/4-20X2.25,8,ZAG	2
17	1276507GT	WELDMENT,MASTER LINK S65-XC	1
18		Ref. HARNESS, LST3S, BOOM DOWN LIMIT SWITCH Refer to 310.1	1
18-	88356-11103GT	SWITCH,LIMIT,W/RLR ARM,NO/NC	
18-	19491GT	CONTACTOR,LIMIT SWITCH	
18-	97128GT	ROLLER ARM,LIMIT SWITCH***	
18-	110650GT	CONN. SQZ PG11 .30-.40 W/ORING	
19	1256177GT	SCREW,PHPM,10-32X1.75,ZAG	2
20	1253185GT	WASHER,FLAT,#10,USS,ZAG	2
21	6178GT	NUT, NYLOCK, 10-32	2
22	824093GT	SCREW, HHF, 3/8-16 X 1.75, 8, ZAG	2
23	1276511GT	ASSEMBLY,ROTARY SENSOR,BOOM ANGLE S60/65-XC	1

603.1 Boom Components - View 1

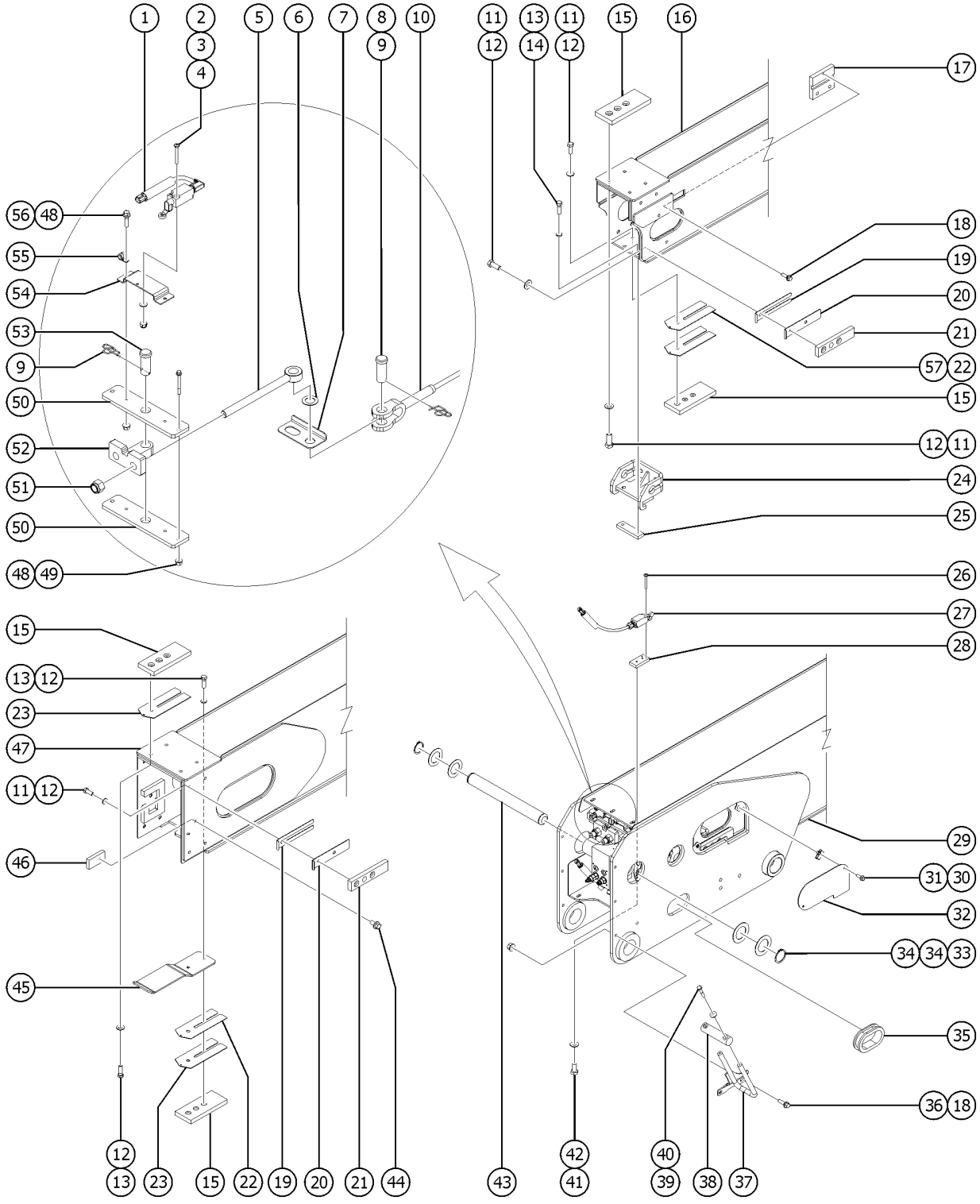

603.1 Boom Components - View 1

Item	Part No.	Description	Qty.
1		Ref : HARNESS, LSB2S, S80/85 Refer to 310.1	1
1-	88356-13107GT	SWITCH,LIMIT,TABULATE,BLUE	
1-	119065GT	CONN, RECEP, 2 WAY, DEUTSCH, DT	
1-	97128GT	ROLLER ARM,LIMIT SWITCH***	
2	824216GT	SCREW, PHPM, 10-32 X 1.5, ZAG	2
3	1253185GT	WASHER,FLAT,#10,USS,ZAG	2
4	6178GT	NUT, NYLOCK, 10-32	2
5	77656GT	ROD END,CABLE	2
6	1256119GT	WASHER,SHIM,1.01X1.63X.062,ZAG	2
7	77618GT	PLATE,ANTIROTATION	1
8	824127GT	PIN,CLEVIS,1.0X2.41,SAE,ZAG	2
9	824129GT	RUE RING,1.0,ZAG	3
10	110339GT	CABLE ASSY, EXTEND SET(PAIR)	1
11	824067GT	SCREW, HHC, 3/8-16 X 1, 8, ZAG	24
12	826793GT	WASHER,FLAT,3/8,SAE,HRD,ZAG	32
13	824068GT	SCREW, HHC, 3/8-16 X 1.25, 8, ZAG	8
14	824110GT	WASHER, LOCK, 3/8, ZAG	2
15	1276021GT	WEAR PAD,7 X 3 X .625 W/INSERT	7
16	1276514GT	ASSEMBLY, WELDMENT #3 WITH BEARINGS, S65-XC	1
16-	1276490GT	WELDMENT.BOOM SECTION # 3	
17	77616GT	PLATE,BOTTOM BLOCK	2
18	824091GT	SCREW, HHF, 3/8-16 X 1.25, 8, ZAG	6
19	1276017GT	SHIM,WEAR PAD,7 X 1.5,16GA	8
20	1276018GT	SHIM,WEAR PAD,7 X 1.5,14GA	8
21	1276019GT	WEAR PAD,7 X 1.5 X .625 W/INSERT	8
22	60840GT	SHIM,WEAR PAD,7 X 3,16GA	3
23	60304GT	SHIM,WEAR PAD,7 X 3,12GA	4
24	77688GT	WELDMENT,EXTENSION BRACKET	1

603.1 Boom Components - View 1

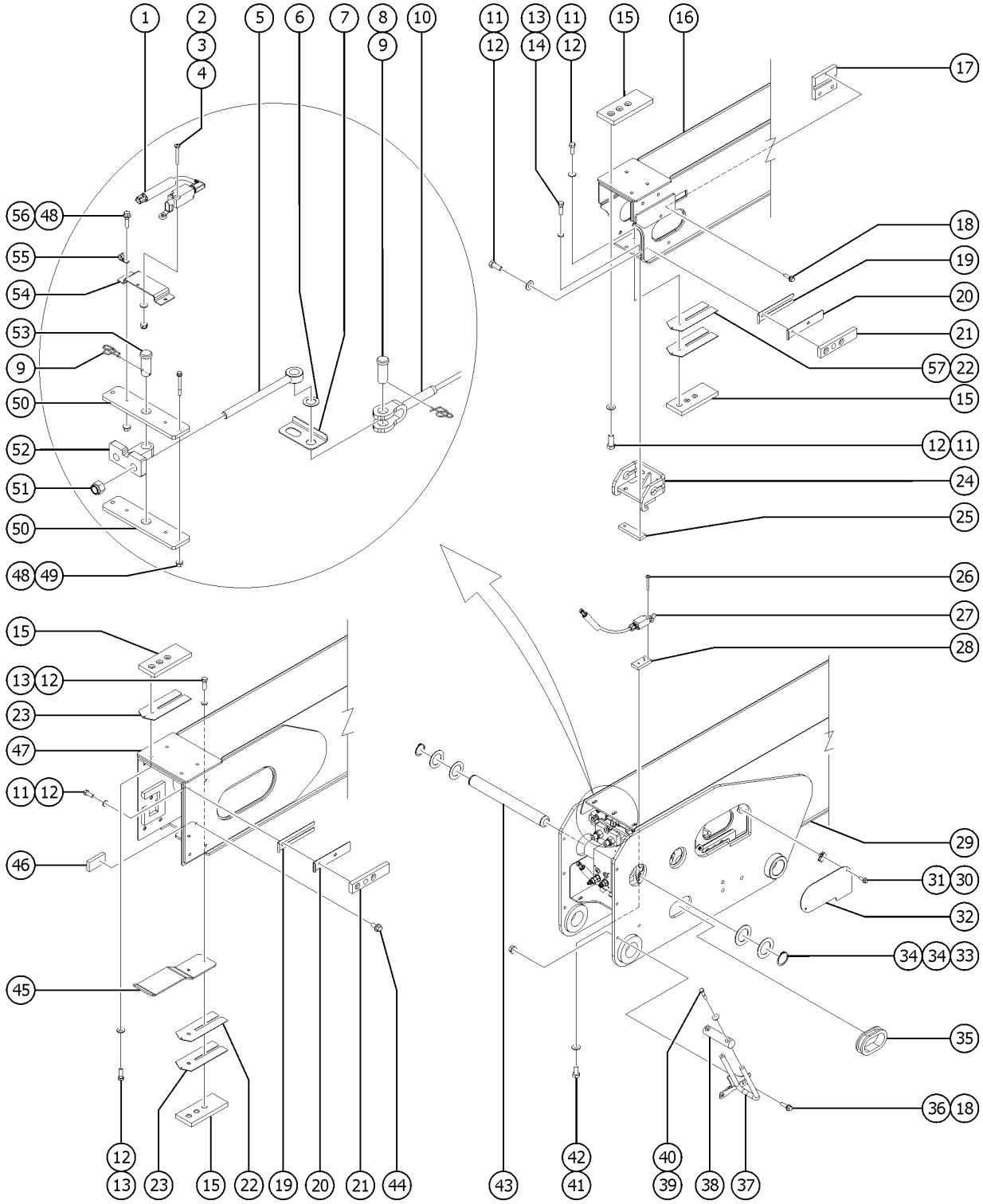

Item	Part No.	Description	Qty.
25	77713GT	PLATE,TAP BLOCK	1
26	51063GT	SCREW,PHILLIPS,RHM,10-32 X 1.5	2
27		REF. HARNESS, LSB1RS, S80/85 Refer to 310.1	1
27-	88356-32163GT	SWITCH,LIMIT,TABULATED,BLUE	
27-	97232GT	CONTACTOR-LIMIT SWITCH**	
27-	97128GT	ROLLER ARM,LIMIT SWITCH***	
27-	110650GT	CONN. SQZ PG11 .30-.40 W/ORING	
28	1283538GT	TAP BLOCK, LIMIT SWITCH	1
29	1276513GT	ASSEMBLY, WELDMENT #1 WITH BEARINGS, S65-XC	1
29-	18720GT	BEARING,2.0IDX2.25ODX1.50L	2
29-	88919GT	BEARING,FL,2.25IDX2.50ODX1.63L	4
29-	119619GT	BEARING,1.5 ID X 1.75 ODX1.5L	1
30	824078GT	SCREW,HHF,1/4-20X.75,8,ZAG	4
31	56912GT	SPRING CLIP,1/4-20,.025-.15X.54,ZAG	4
32	77882GT	COVER,RH,BOOM SECTION #1	2
33	825796GT	SNAP RING,EXTERNAL,1.50,ZAG	2
34	1251565GT	WASHER,SHIM,1.56X2.5X.061,ZAG	4
35	71768GT	GROMMET,4.00 GRV. X .75 THK.	1
36	1274322GT	NUT,NYLOCK FLG,3/8-16,F,ZAG	2
37	1276468GT	WELDMENT, BOOM HOSES AND CABLES GUIDE, S65XC	1
38	1276482GT	ROLLER, BOOM HOSES & CABLES GUIDE, S65XC	1
39	824062GT	SCREW,HHC,1/4-20X1.5,8,ZAG	2
40	824113GT	WASHER,FLAT,USS,1/4,ZAG	2
41	1256464GT	SCREW,HHC,5/16-18X.75,8,ZAG	2
42	825358GT	WASHER,FLAT,5/16,USS,ZAG	2
43	81856GT	PIN,1.50DIAX13.43LG,2RING	1
44	824089GT	SCREW, HHF, 3/8-16 X .75, 8, ZAG	2
45	1276453GT	FORMING,LS RAMP	1

603.1 Boom Components - View 1

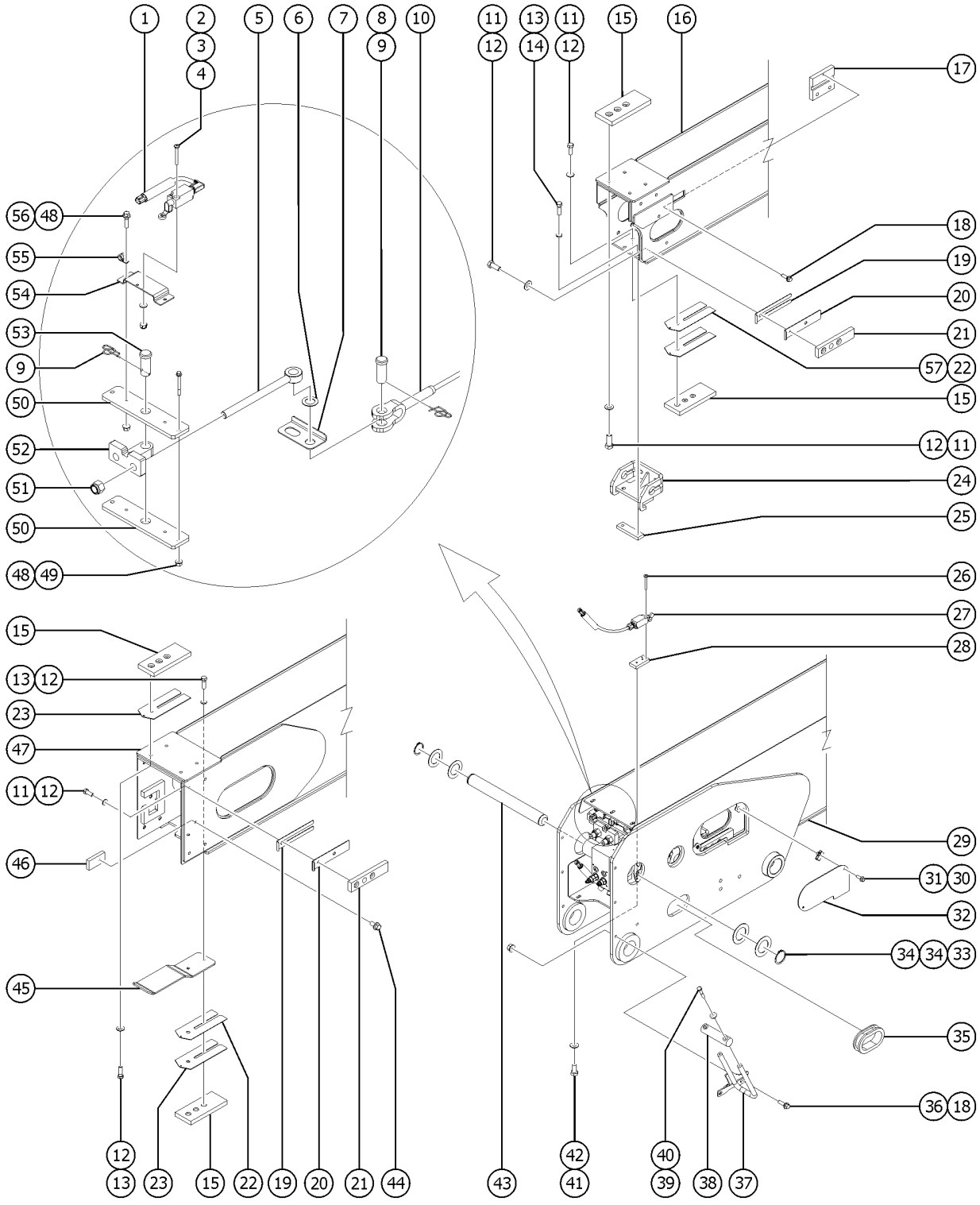

603.1 Boom Components - View 1

Item	Part No.	Description	Qty.
46	88795GT	CAP,EXTENSION	2
47	1276491GT	WELDMENT.BOOM SECTION # 2***	1
48	1277924GT	NUT,NYLOCK FLG,1/4-20,F,ZAG	4
49	824083GT	SCREW,HHF,1/4-20X2.5,8,ZAG	2
50	77654PGT	PLATE,ROCKER	2
51	77051GT	NUT,NYLOCK,3/4-10,GRD.8	2
52	77795GT	MACHINED PIVOT PLATE WELDMENT	1
53	826379GT	PIN,CLEVIS,1X2.250,ZAG	1
54	77653GT	FORMING,LIMIT SWITCH BRACKET	1
55	6833GT	CLAMP,0.50,#8 X 1/4,RUB CUSH	1
56	824079GT	SCREW,HHF,1/4-20X1,8,ZAG	2
57	60304GT	SHIM,WEAR PAD,7 X 3,12GA To SN S60XCH-45680	2

604.1 Boom Components - View 2

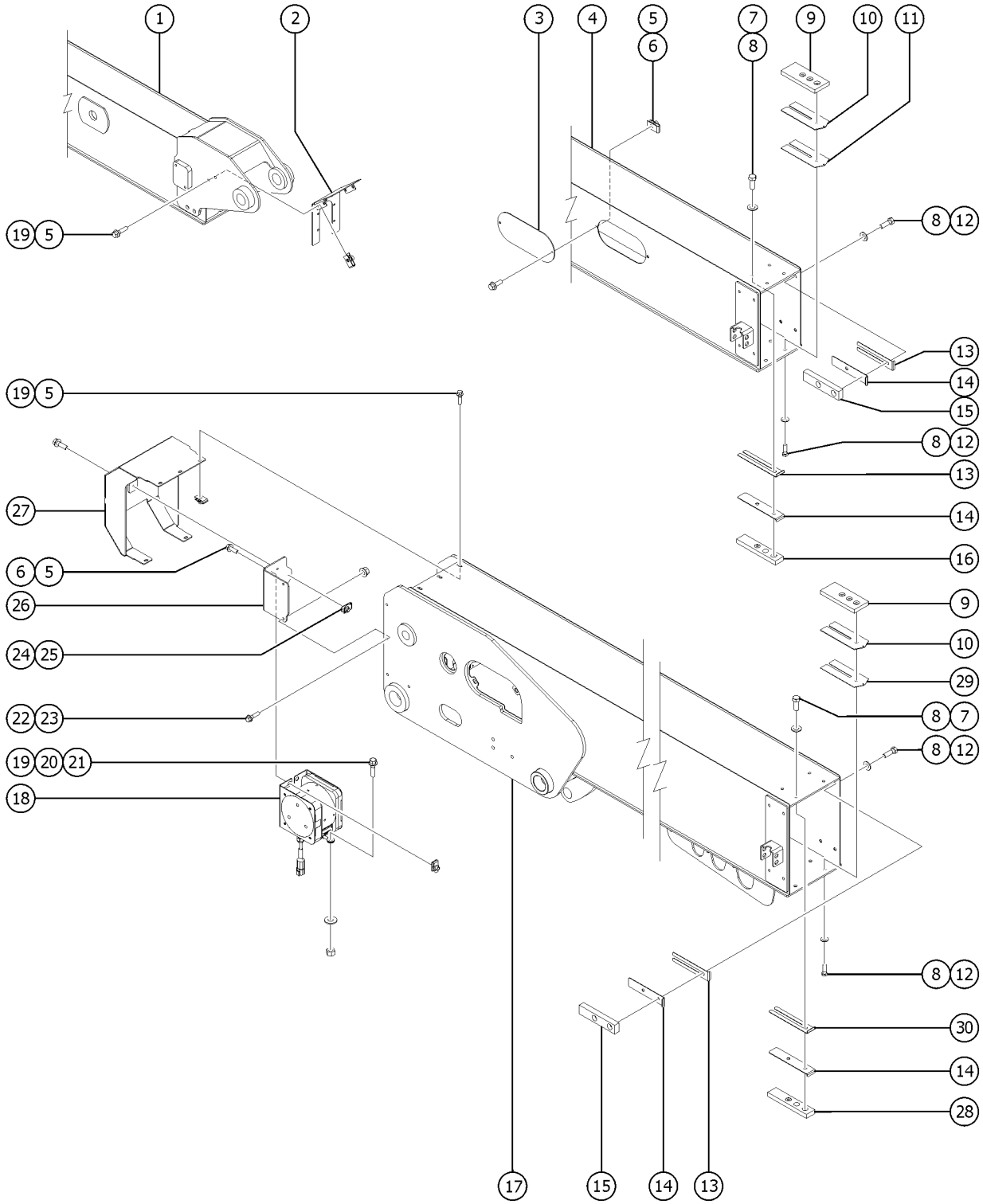

604.1 Boom Components - View 2

Item	Part No.	Description	Qty.
1		Ref : WELDMENT.BOOM SECTION # 3 Refer to 603.1	1
2	1276396GT	COVER.DEBRIS #3 BOOM	1
3	77884GT	COVER,BOOM SECTION #2	2
4		Ref : WELDMENT.BOOM SECTION # 2*** Refer to 603.1	1
5	56912GT	SPRING CLIP,1/4-20,.025-.15X.54,ZAG	17
6	824078GT	SCREW,HHF,1/4-20X.75,8,ZAG	8
7	824067GT	SCREW, HHC, 3/8-16 X 1, 8, ZAG	8
8	826793GT	WASHER,FLAT,3/8,SAE,HRD,ZAG	32
9	1276021GT	WEAR PAD,7 X 3 X .625 W/INSERT	4
10	60304GT	SHIM,WEAR PAD,7 X 3,12GA	4
11	60840GT	SHIM,WEAR PAD,7 X 3,16GA	4
12	824068GT	SCREW, HHC, 3/8-16 X 1.25, 8, ZAG	24
13	1276017GT	SHIM,WEAR PAD,7 X 1.5,16GA	10
14	1276018GT	SHIM,WEAR PAD,7 X 1.5,14GA	12
15	1273674GT	WEAR PAD,7 X 1.5 X .875 W/INSERT	8
16	1276019GT	WEAR PAD,7 X 1.5 X .625 W/INSERT	2
17		Ref : WELDMENT.BOOM SECTION # 1*** Refer to 603.1	1
18	1278666GT	LENGTH TRANSDUCER, 400 IN, CAN ID 47	1
19	824079GT	SCREW,HHF,1/4-20X1,8,ZAG	10
20	824113GT	WASHER,FLAT,USS,1/4,ZAG	1
21	1274165GT	NUT,NYLOCK,1/4-20,C,ZAG	1
22	824087GT	SCREW, HHF, 5/16-18 X 1.25, 8, ZAG	2
23	1274167GT	NUT,NYLOCK FLG,5/16-18,F,ZAG	2
24	29868GT	SPRING CLIP,3/8-16,.05-.20X.73,ZAG	1
25	824091GT	SCREW, HHF, 3/8-16 X 1.25, 8, ZAG	1
26	1276509GT	WELDMENT,STRING POT MOUNT S60/65-XC	1
27	1276508GT	WELDMENT, COVER, PRIMARY BOOM, S60/65-XC	1
28	1276019GT	WEAR PAD,7 X 1.5 X .625 W/INSERT To SN S60XCH-45680	2

604.1 Boom Components - View 2

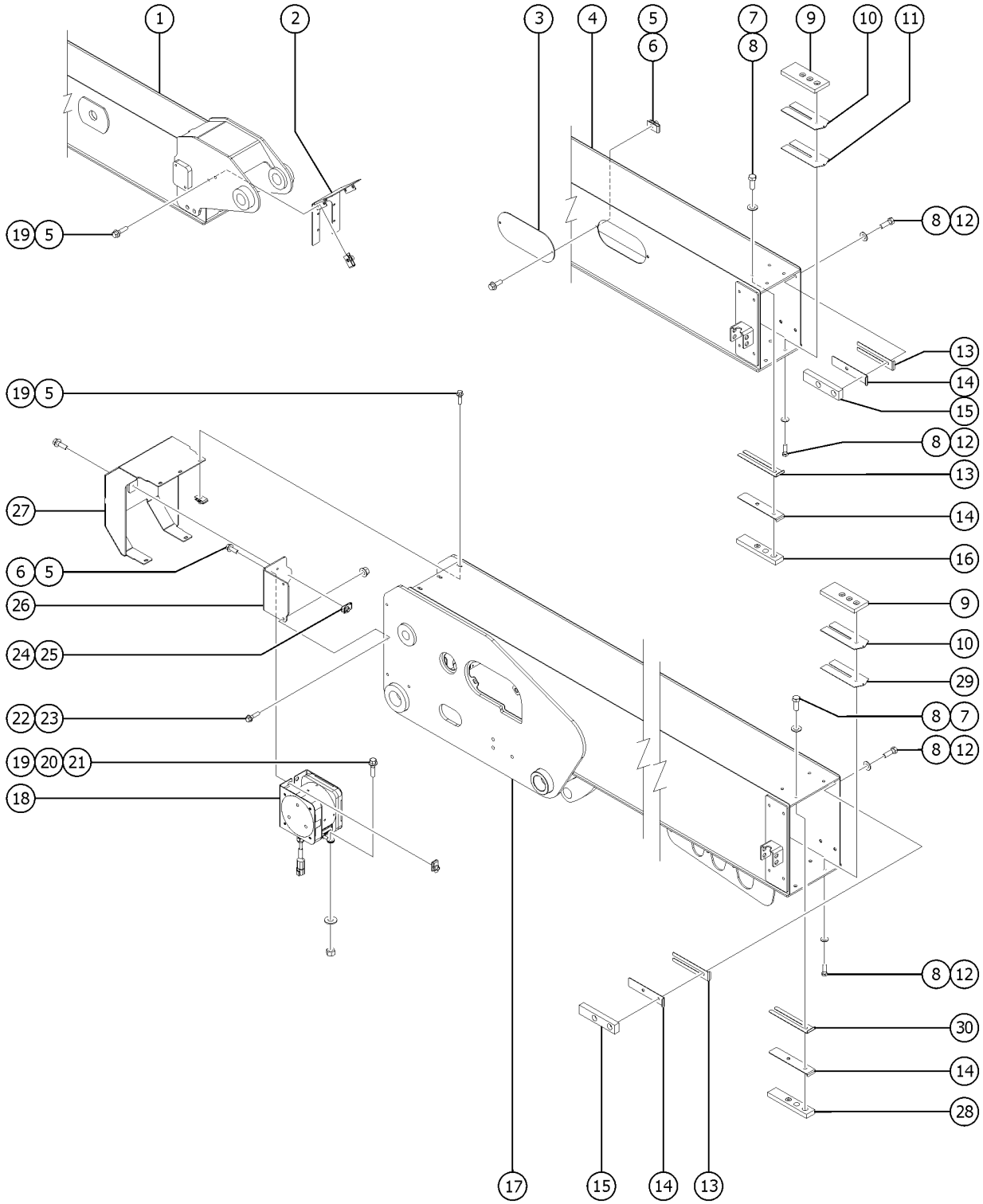

604.1 Boom Components - View 2

Item	Part No.	Description	Qty.
28-	1273674GT	WEAR PAD,7 X 1.5 X .875 W/INSERT From SN S60XCH-45681	
29	60840GT	SHIM,WEAR PAD,7 X 3,16GA To SN S60XCH-45680	2
29-	60304GT	SHIM,WEAR PAD,7 X 3,12GA From SN S60XCH-45681	
30	1276017GT	SHIM,WEAR PAD,7 X 1.5,16GA To SN S60XCH-45680	2

605.1 Boom Components - View 3

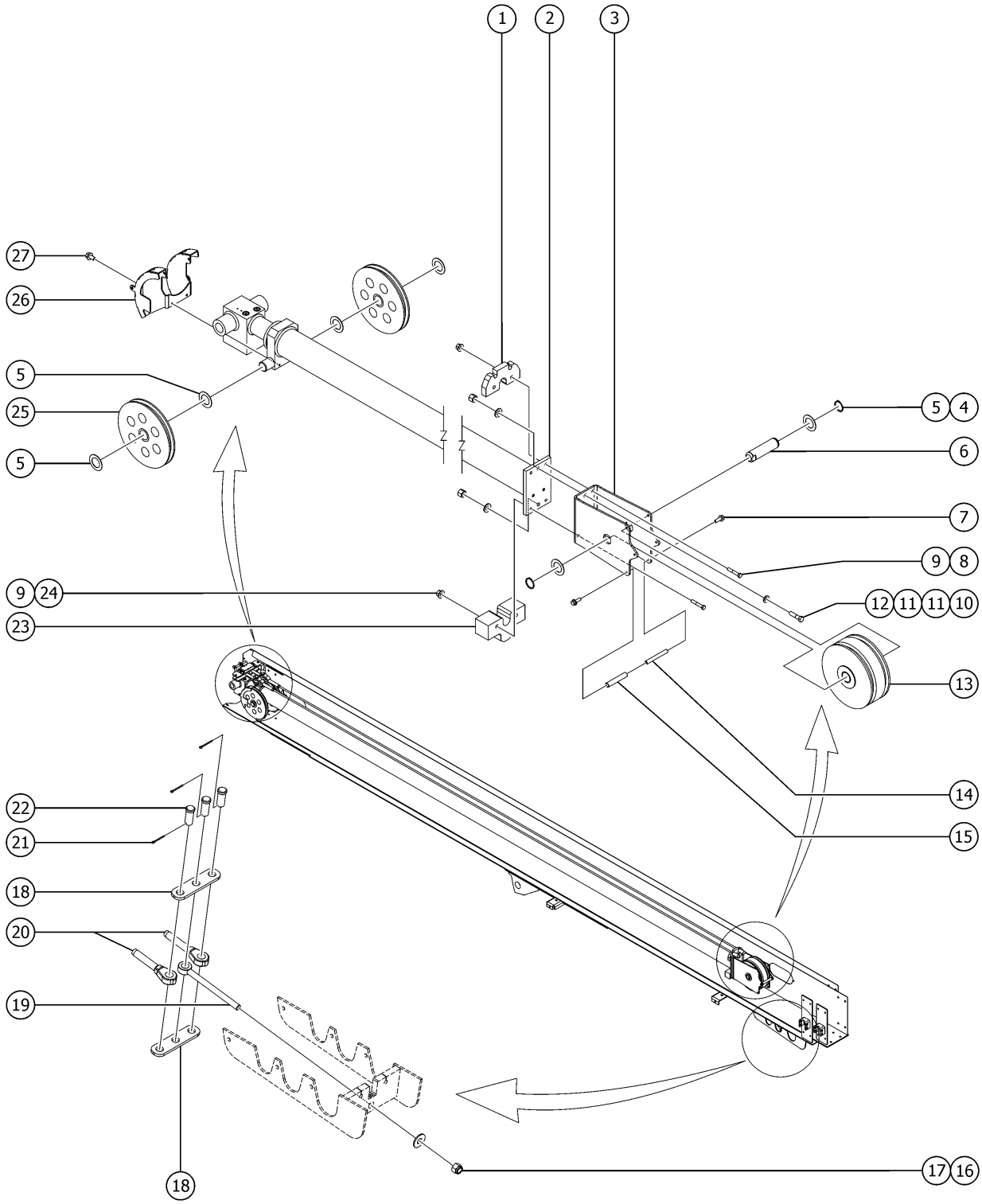

605.1 Boom Components - View 3

Item	Part No.	Description	Qty.
1	139385GT	GUIDE, EXT CABLE, TOP	1
2	1276413GT	CYLINDER, PRIMARY EXTENSION, S-65 XC	1
2-	1284093GT	SEAL KIT, CYLINDER PRIMARY EXTENSION	
2-	1281963GT	VALVE, COUNTERBALANCE, CACA-LHN-1500 V1, (Extend)	
2-	1274315GT	VALVE, COUNTERBALANCE, CABG-LHN@1200 4.5:1 V2, (Retract)	
3	139384GT	BRACKET, EXTEND SHEAVE	1
4	825796GT	SNAP RING,EXTERNAL,1.50,ZAG	2
5	1251565GT	WASHER,SHIM,1.56X2.5X.061,ZAG	6
6	88793GT	PIN,1.5 X 5.50 LG	1
7	824078GT	SCREW,HHF,1/4-20X.75,8,ZAG	6
8	1252978GT	SCREW,HHC,3/8-16X2.25,8,ZAG	2
9	1274322GT	NUT,NYLOCK FLG,3/8-16,F,ZAG	4
10	1255782GT	SCREW,HHC,1/2-13X2.0,8,ZAG	2
11	825353GT	WASHER,FLAT,1/2,SAE,HRD,ZAG	4
12	1274320GT	NUT,NYLOCK,1/2-13,C,ZAG	2
13	88567GT	SHEAVE,EXTENSION CABLE(LARGER)	1
14	77649GT	ROLLER,1/2" ALUMINUM	3
15	77648GT	ROLLER,1/2" PVC	3
16	77051GT	NUT,NYLOCK,3/4-10,GRD.8	1
17	1255761GT	WASHER,FLAT,3/4,USS,HRD,ZAG	1
18	88796GT	PLATE,RETRACTION CABLE EQUALIZ	2
19	77656GT	ROD END,CABLE	1
20	110340GT	CABLE ASSY, RETRACT SET (PAIR)	1
21	13635-10GT	PIN,COTTER,.156 X 1.75	3
22	826379GT	PIN,CLEVIS,1X2.250,ZAG	3
23	139288GT	GUIDE, EXT. CABLE, BOTTOM	1
24	1258892GT	SCREW,HHC,3/8-16X3.5,8,ZAG	2
25	88568GT	SHEAVE,RETRACT CABLE(SMALLER)	2

605.1 Boom Components - View 3

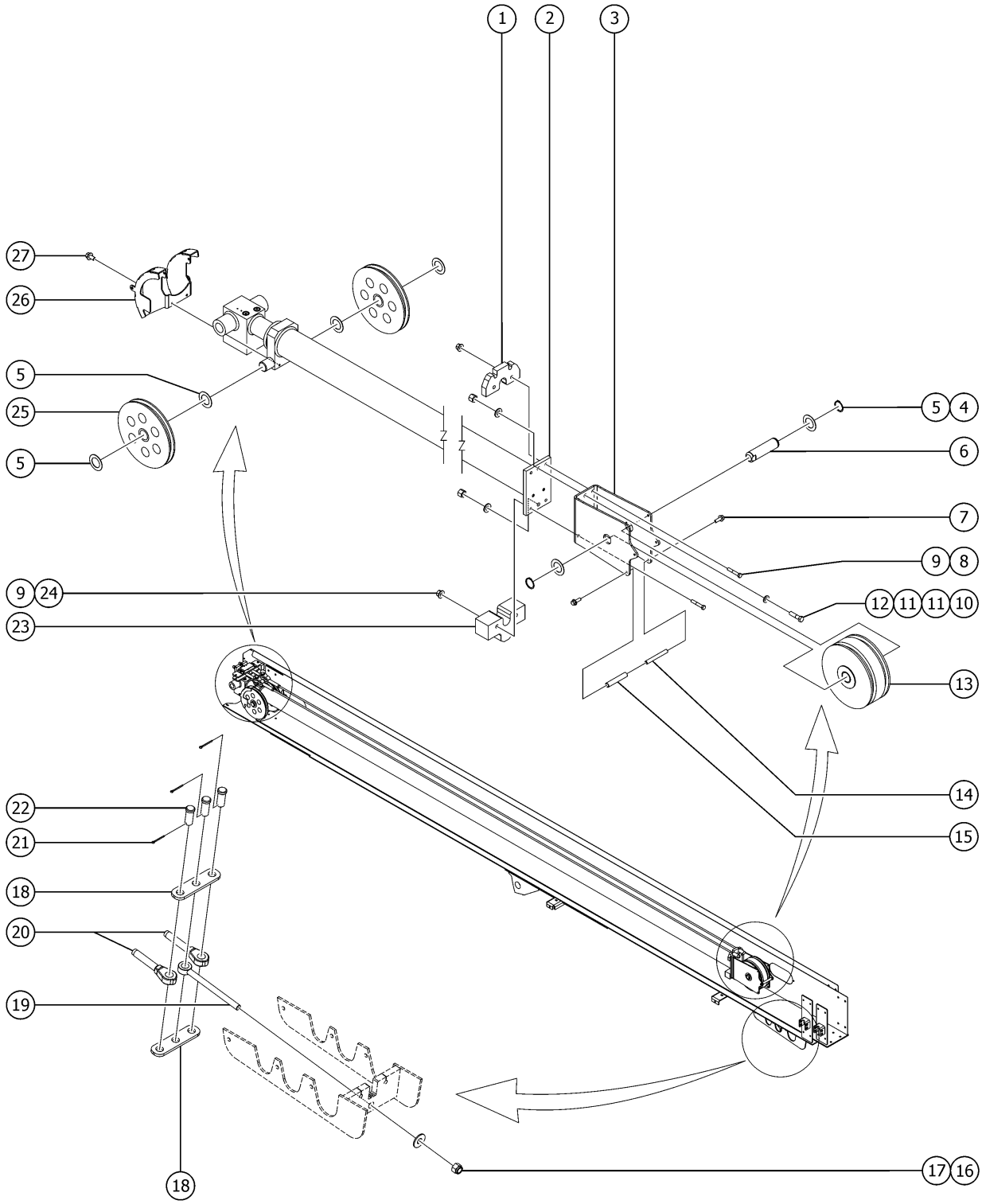

605.1 Boom Components - View 3

Item	Part No.	Description	Qty.
26	1276437GT	WELDMENT,RETRACT SHEAVE COVER	1
27	824077GT	SCREW, HHF, 1/4-20 X .5, 8, ZAG	2

606.1 Boom End Components, S-65 XC

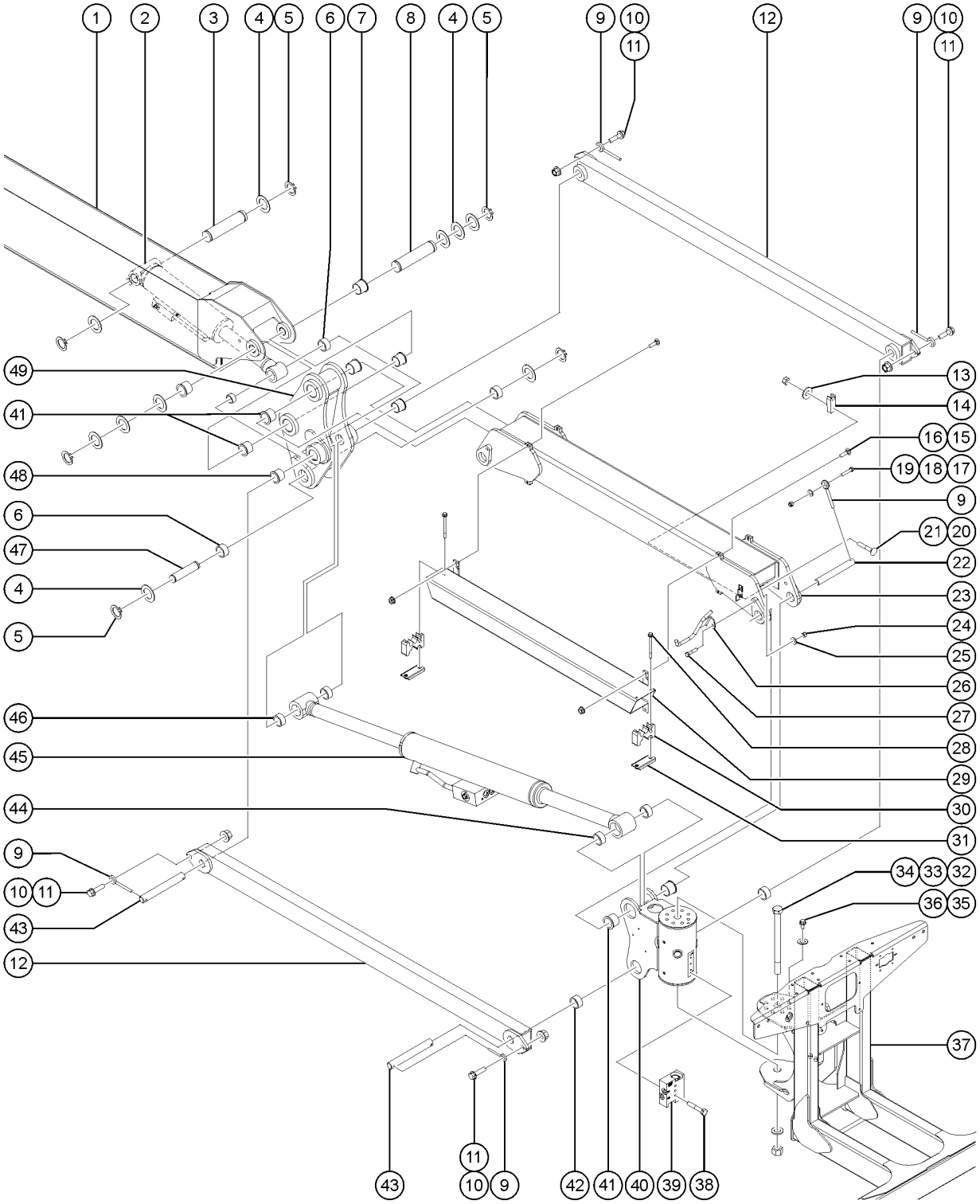

Item	Part No.	Description	Qty.
1		ref : WELDMENT.BOOM SECTION # 3 Refer to 603.1	
2	1273589GT	CYLINDER, PLATFORM LEVEL	1
2-	1279049GT	SEAL KIT, CYLINDER, LEVEL	
2-	77303GT	VALVE, CNTRBAL 3500 PSI, ATM VEN	2
3	1276427GT	PIN,1.50DIA.X7.47LG,2RING	1
4	1251565GT	WASHER,SHIM,1.56X2.5X.061,ZAG	10
5	825796GT	SNAP RING,EXTERNAL,1.50,ZAG	6
6	18396GT	BEARING,1.5IDX1.75ODX1.0L	6
7	1273706GT	BEARING,1.5IDX1.75ODX1.825L	2
8	1307726GT	PIN,1.50DIAX10.25LG,2RING,1THRD	1
9	825019GT	ROD END, .375X3.69, ZAG	6
10	824092GT	SCREW, HHF, 3/8-16 X 1.5, 8, ZAG	4
11	1274322GT	NUT,NYLOCK FLG,3/8-16,F,ZAG	4
12	1274511GT	MACHINING, COMPRESSION LINK	2
13	824113GT	WASHER,FLAT,USS,1/4,ZAG from SN S65XCH-46309	2
14	1269642GT	CLAMP, HOSE	2
15	1256463GT	BOLT,CARRIAGE,1/4-20X1.25,5,ZAG	4
16	1256679GT	NUT,SERRATED,1/4-20,8,ZAG	4
17	5224GT	SCREW,HHC,3/8-16 X 2 to SN S65XCH-46308	2
17B	1253478GT	SCREW,HHF,3/8-16X2,8,ZAG from SN S65XCH-46309	
18	6097GT	WASHER, FLAT, USS, 3/8", Y to SN S65XCH-46308	2
18B	1255758GT	WASHER,FLAT,3/8,USS,ZAG from SN S65XCH-46309	
19	7713GT	NUT, LP NYLOCK, 3/8-16 to SN S65XCH-46308	2
19B	1274166GT	NUT,NYLOCK,3/8-16,C,ZAG from SN S65XCH-46309	
20	1255756GT	BOLT,CARRIAGE,1/4-20X1.5,5,ZAG	2
21	1274165GT	NUT,NYLOCK,1/4-20,C,ZAG	2
22	76695GT	PIN,1.50 DIA X 8.75"LG,1HOLE	2
23	1269424GT	MACHINING, 5 FT JIB BOOM	1

606.1 Boom End Components, S-65 XC

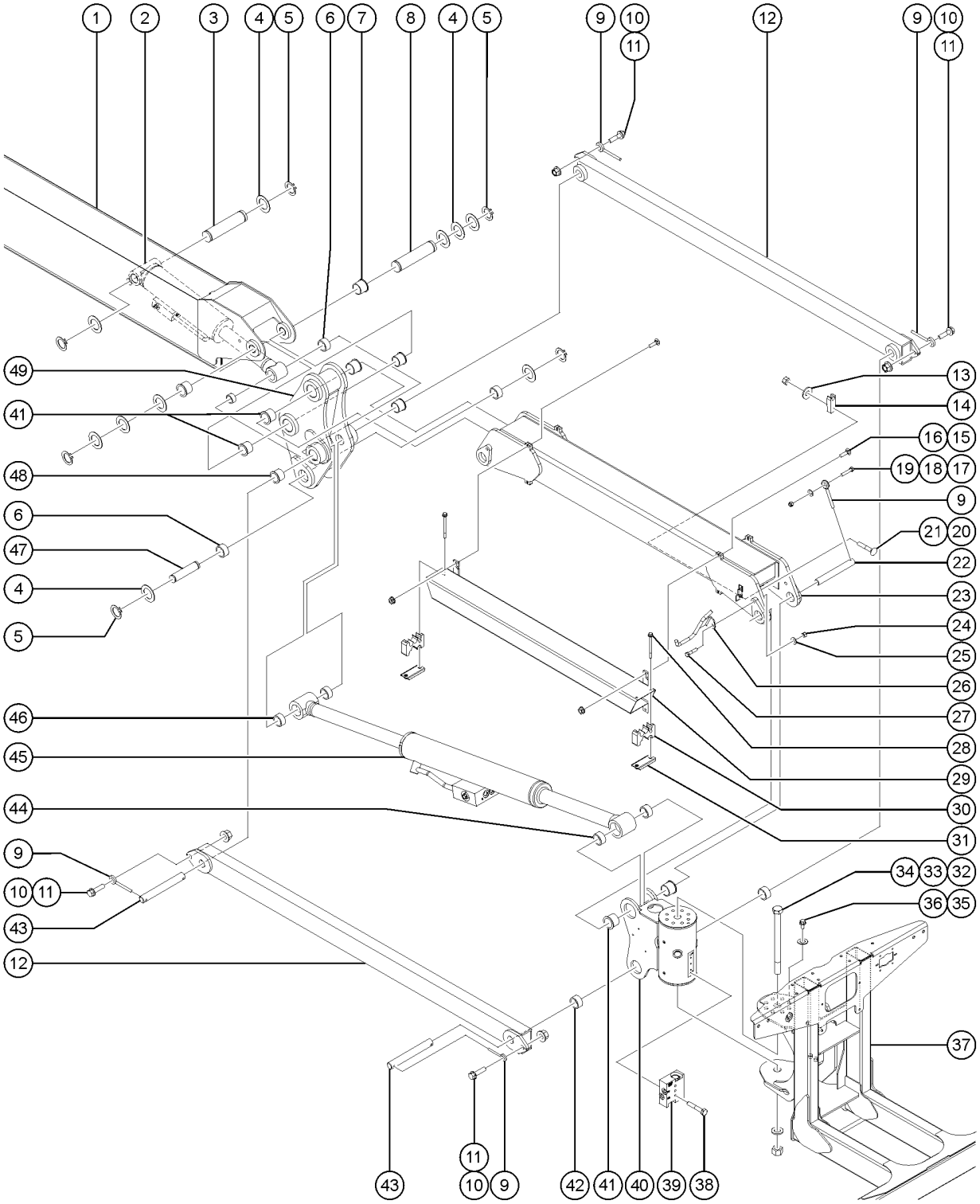

Item	Part No.	Description	Qty.
24	1274166GT	NUT,NYLOCK,3/8-16,C,ZAG from SN S65XCH-46309	1
25	1255758GT	WASHER,FLAT,3/8,USS,ZAG from SN S65XCH-46309	1
26	1286171GT	WELDMENT, JIB HOSE GUIDE from SN S65XCH-46309	1
27	1256847GT	SCREW,HHC,3/8-16X1.75,8,ZAG from SN S65XCH-46309	1
28	824084GT	SCREW,HHF,1/4-20X3,8,ZAG	4
29	1280124GT	WELDMENT,COVER,JIB	1
30	1279429GT	CLAMP BLOCK, S40/45XC	2
31	1279306GT	ASSY, CLAMP PLATE to SN S65XCH-46816	2
31B	1296817GT	ASSY, CLAMP PLATE, CABLE TRACK from SN S65XCH-46817	2
31B-	1296816GT	CLAMP PLATE, CABLE TRACK	2
31B-	56912GT	SPRING CLIP,1/4-20,.025-.15X.54,ZAG	4
32	824075GT	SCREW, HHC, 1-8 X 12.75, 5, ZAG	1
33	824116GT	WASHER,FLAT,1.0,F436,HRD,ZAG	1
34	1283024GT	NUT,NYLOCK,1-8,8,ZAG	1
35	1256843GT	SCREW,HHC,1/2-13X1.25,8,ZAG	8
36	825353GT	WASHER,FLAT,1/2,SAE,HRD,ZAG	8
37	1273734GT	WELDMENT,PLAT SUPPORT,15K,LS Refer to 608.1	1
38	824081GT	SCREW, HHF, 1/4-20 X 1.5, 8, ZAG	3
39		Ref : MANIFOLD, ROTATOR, CB Refer to 404.1	
40	214225GT	ROTATOR,PLATFORM,15K,JIB	1
40-	226542GT	SEAL KIT, 15K ROTATOR	
40-	88516GT	SCREW,BLEEDER,M5X0.8	
41	214226GT	BEARING,FL,1.75IDX2.00ODX1.61L	6
42	30222GT	BEARING,FL,1.25IDX1.41ODX1.50L	2
43	81175GT	PIN,1.25DIAX14.45LG,2HOLE	2
44	88280GT	BEARING,1.5IDX1.75ODX0.75L	2
45	1276820GT	CYLINDER, JIB	1
45-	33428GT	VALVE,COUNTERBALANCE	2

606.1 Boom End Components, S-65 XC

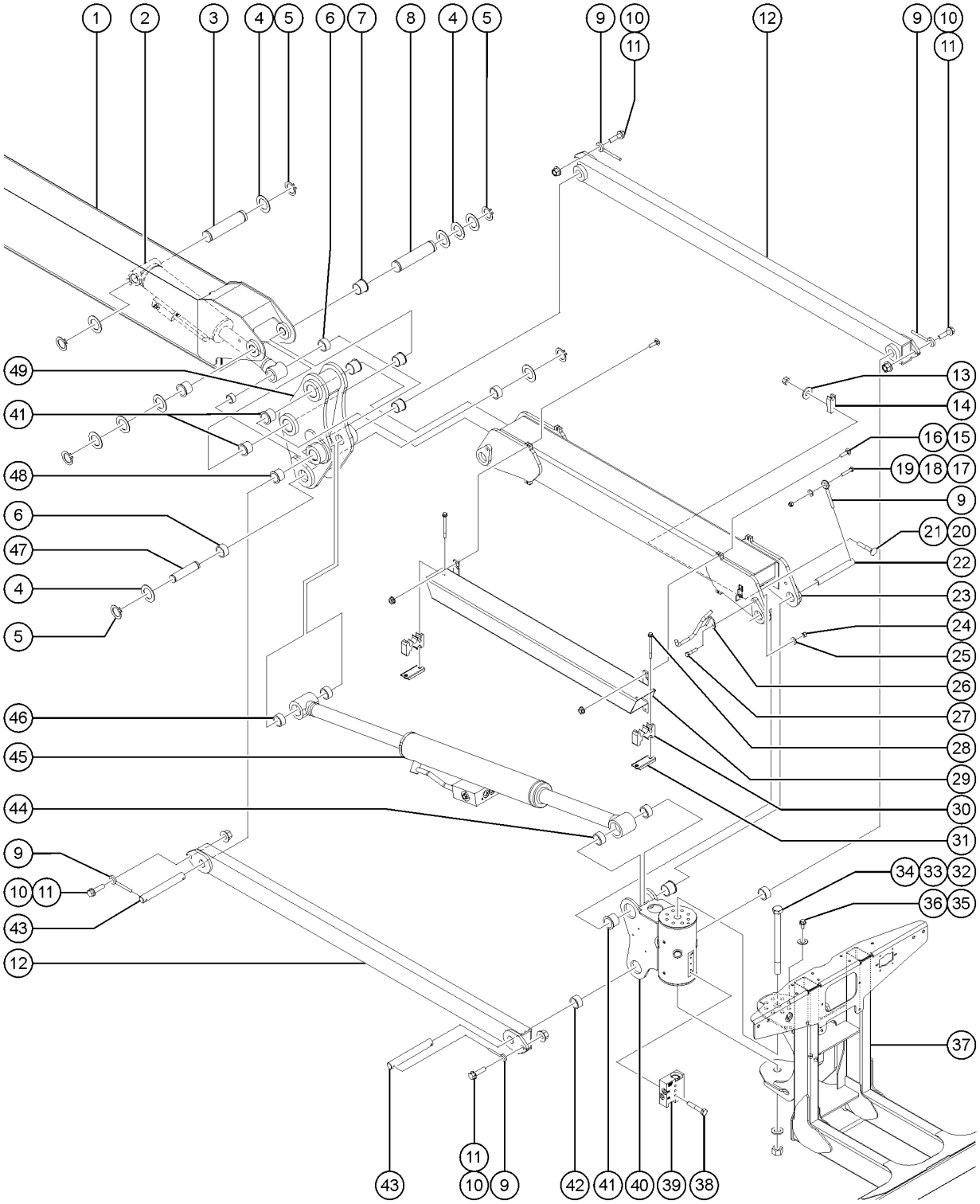

Item	*Part No.*	*Description*	*Qty.*
45-	1276822GT	SEAL KIT FOR JIB CYLINDER	
46	30220GT	BEARING,1.25ID X 1.5OD X 0.69L	2
47	1276484GT	PIN, 1.50X5.625, 2 RING	1
48	128268GT	BEARING,FL, 1.25X1.5X2.13	2
49	1288386GT	ASSY, JIB BELLCRANK WITH BEARINGS to SN S65XCH-46308	1
49B	238330GT	MACH. JIB BELLCRANK from SN S65XCH-46309	1

607.1 Boom End Components, S-60 XC

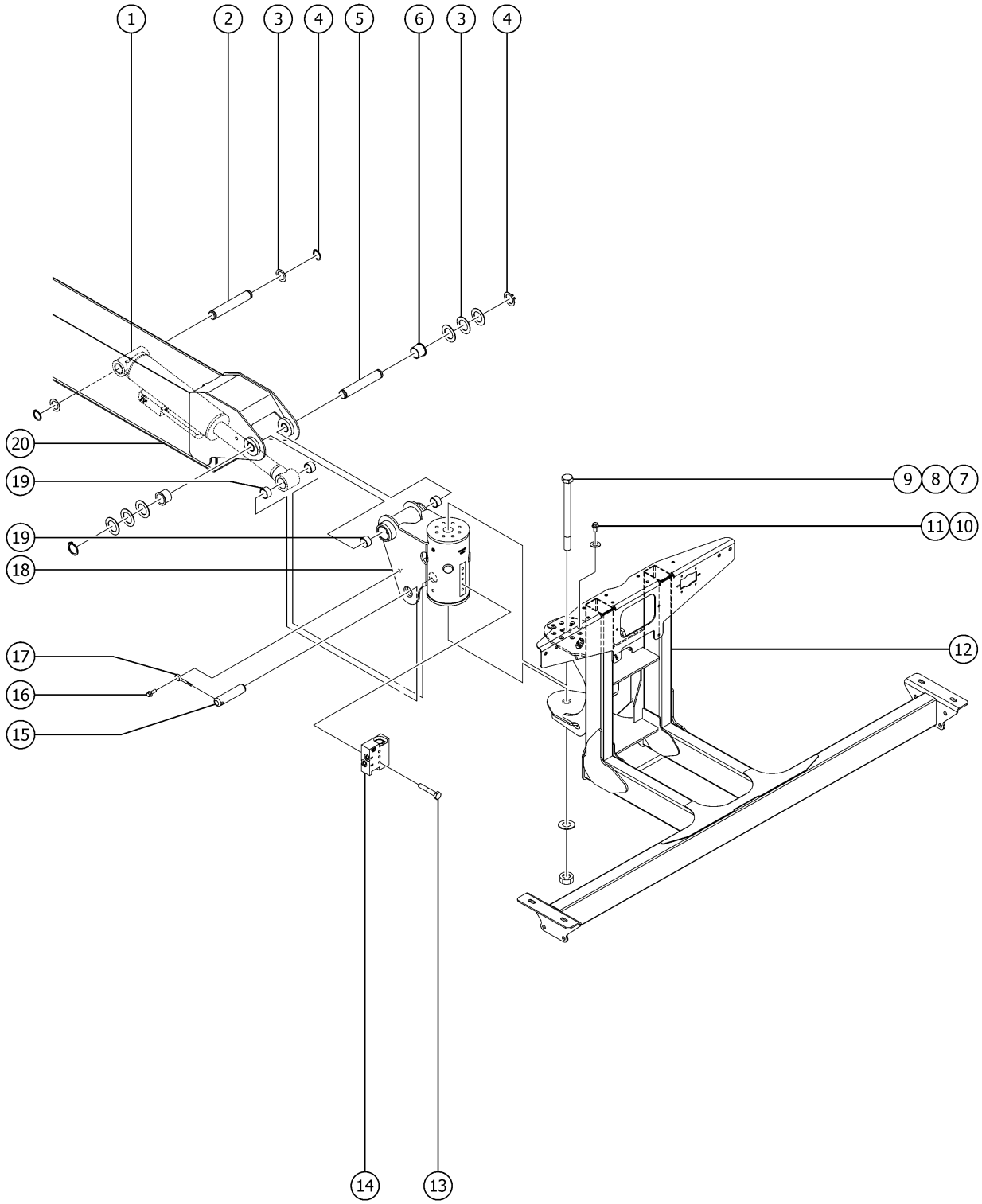

Item	Part No.	Description	Qty.
1	1273589GT	CYLINDER, PLATFORM LEVEL	1
1-	1279049GT	SEAL KIT, CYLINDER, LEVEL	
1-	77303GT	VALVE, CNTRBAL 3500 PSI, ATM VEN	
2	1276427GT	PIN,1.50DIA.X7.47LG,2RING	1
3	1251565GT	WASHER,SHIM,1.56X2.5X.061,ZAG	8
4	825796GT	SNAP RING,EXTERNAL,1.50,ZAG	4
5	1307726GT	PIN,1.50DIAX10.25LG,2RING,1THRD	1
6	1273706GT	BEARING,1.5IDX1.75ODX1.825L	2
7	824075GT	SCREW, HHC, 1-8 X 12.75, 5, ZAG	1
8	824116GT	WASHER,FLAT,1.0,F436,HRD,ZAG	1
9	1283024GT	NUT,NYLOCK,1-8,8,ZAG	1
10	1256843GT	SCREW,HHC,1/2-13X1.25,8,ZAG	8
11	825353GT	WASHER,FLAT,1/2,SAE,HRD,ZAG	8
12		Ref : Platform support Refer to 608.1	1
13	824081GT	SCREW, HHF, 1/4-20 X 1.5, 8, ZAG	3
14		Ref : MANIFOLD, ROTATOR, CB Refer to 404.1	
15	108855GT	PIN,1.50DIAX5.25LG,1HOLE	1
16	824067GT	SCREW, HHC, 3/8-16 X 1, 8, ZAG	1
17	825019GT	ROD END, .375X3.69, ZAG	1
18	1275169GT	ROTATOR,PLATFORM,15K,NON-JIB includes item 19	1
18-	226542GT	SEAL KIT, 15K ROTATOR	
18-	88516GT	SCREW,BLEEDER,M5X0.8	
19	18396GT	BEARING,1.5IDX1.75ODX1.0L	6
20		Ref : WELDMENT.BOOM SECTION # 3 Refer to 603.1	

608.1 Boom End Components, Load Sense

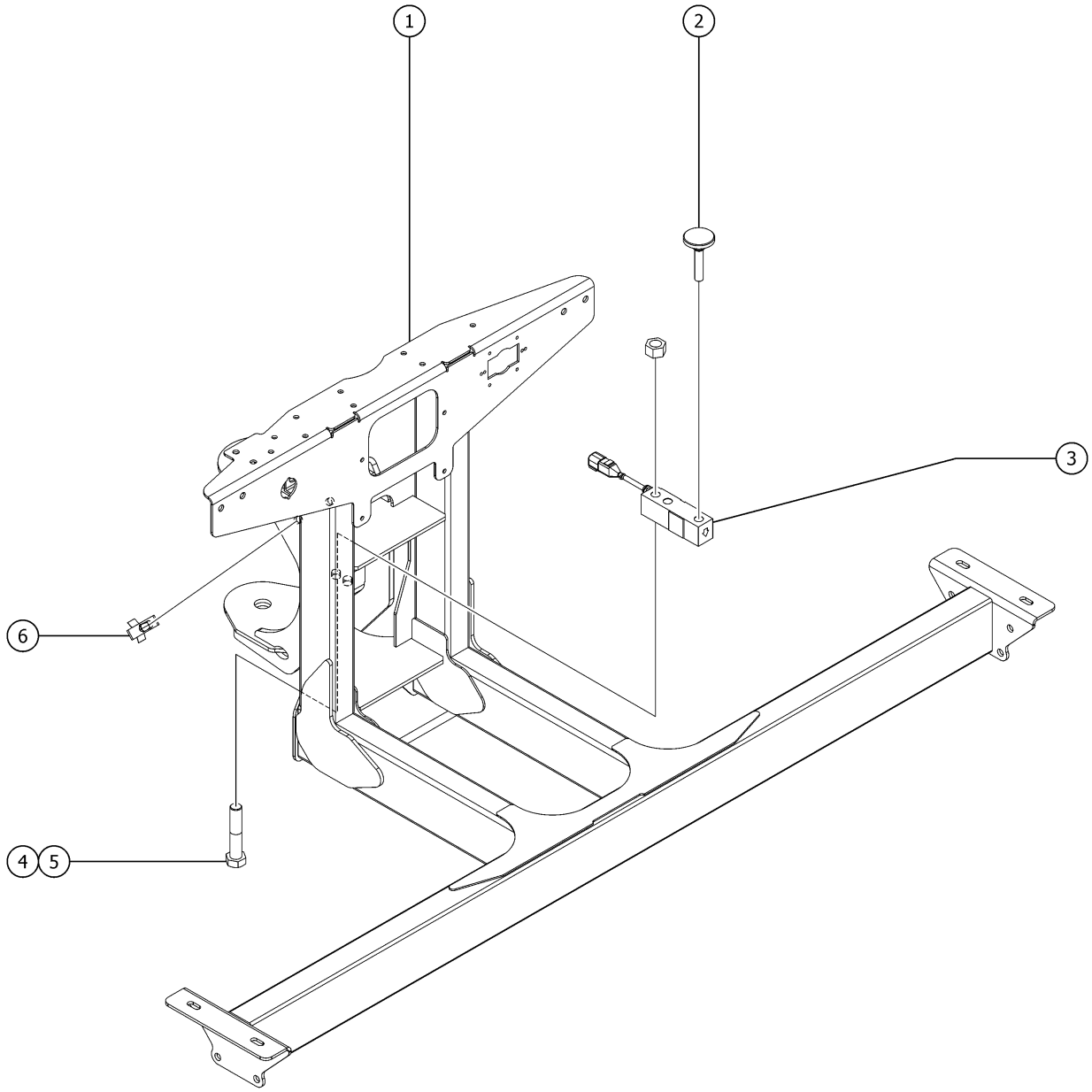

Item	*Part No.*	*Description*	*Qty.*
1	1273734GT	WELDMENT,PLAT SUPPORT,15K,LS	1
2	1270337GT	LEVELING MOUNT, SWIVEL, 1/2-20	1
3	1270278GT	LOAD CELL,J1939,650KG/1433LB NOTE: install with arrows pointing downwards (Calibration required after replacement)	1
4	1257464GT	SCREW,HHC,1/2-13X2.5,8,ZAG	2
5	1259106GT	NUT,1/2-13,8,ZAG	2
6	105214GT	CABLE TIE MOUNT, WINGED	2

609.1 Cable Track

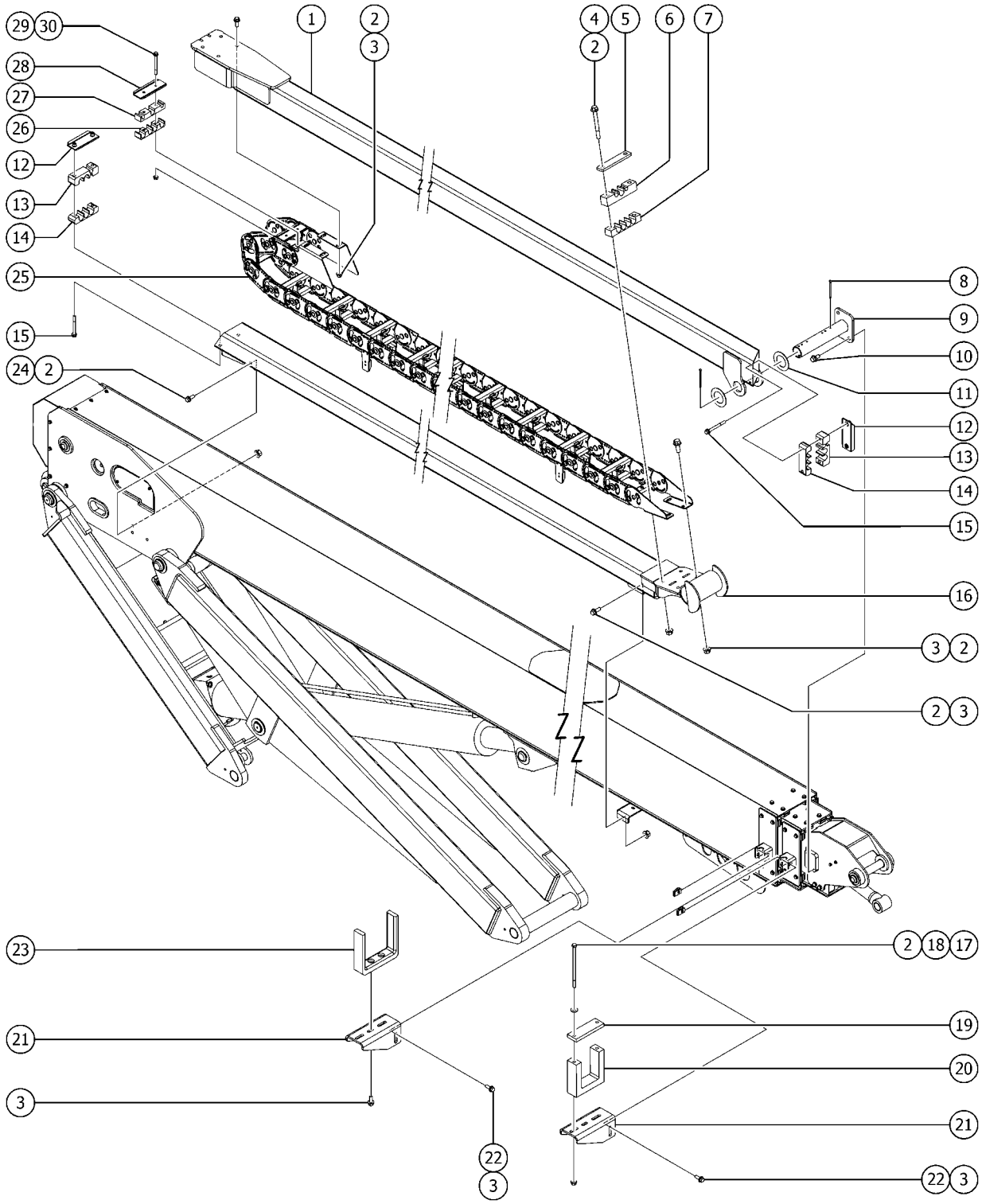

Item	Part No.	Description	Qty.
1	1276521GT	WELDMENT, UPPER CABLE TRACK TUBE, S65XC	1
2	1274322GT	NUT,NYLOCK FLG,3/8-16,F,ZAG	16
3	824090GT	SCREW,HHF,3/8-16X1,8,ZAG	20
4	824096GT	SCREW, HHF, 3/8-16 X 3.5, 8, ZAG	2
4B	1258395GT	SCREW,HHF,3/8-16X4,8,ZAG (air to platform and welder option)	2
4B-	228796GT	CLAMP, OPTIONS, CABLE TRACK (air to platform and welder option)	
5	228797GT	BAR, CLAMP, CABLE TRACK	1
6	1276450GT	CLAMP,CABLES	1
7	1280839GT	CLAMP, HOSE	1
8	42079GT	PIN,COTTER,.156 X 2.5	2
9	81347GT	WELDMENT,TRACK PULL TUBE PIVOT	1
10	824089GT	SCREW, HHF, 3/8-16 X .75, 8, ZAG	2
11	1251565GT	WASHER,SHIM,1.56X2.5X.061,ZAG	2
12	1296817GT	ASSY, CLAMP PLATE, CABLE TRACK from SN S65XCH-46817	2
12-	1296816GT	CLAMP PLATE, CABLE TRACK	2
12-	56912GT	SPRING CLIP,1/4-20,.025-.15X.54,ZAG	4
13	1276449GT	CLAMP,CABLES	2
14	1280837GT	CLAMP, HOSE	2
15	824083GT	SCREW,HHF,1/4-20X2.5,8,ZAG	4
15B	1257867GT	SCREW,HHF,1/4-20X3.5,8,ZAG (air to platform and welder option)	4
15B-	1280838GT	CLAMP BLOCK, OPTIONS (air to platform and welder option)	
16	1276520GT	WELDMENT, LOWER CABLE TRACK TRAY, S65XC	1
17	1255391GT	SCREW,HHC,3/8-16X7,8,ZAG	2
18	1255758GT	WASHER,FLAT,3/8,USS,ZAG	2
19	81342GT	WEAR PAD,5.5 X 1.75 X .5	1
20	81341GT	WEAR PAD,CABLE TRACK PULL TUBE	1
21	1276432GT	FORMING PLATE, S60/65-XC	2
22	29868GT	SPRING CLIP,3/8-16,.05-.20X.73,ZAG	8

609.1 Cable Track

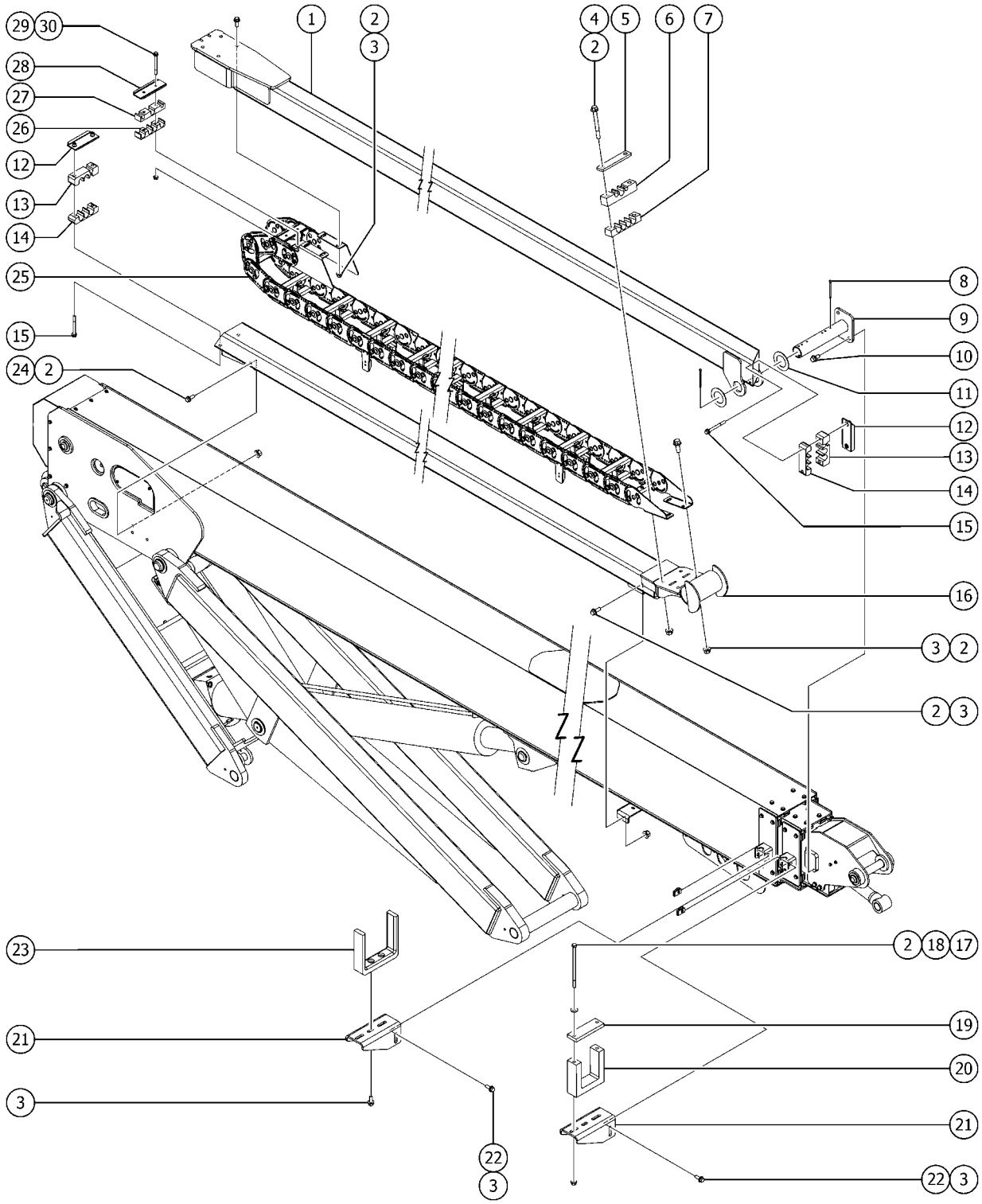

Item	Part No.	Description	Qty.
23	81340GT	WEAR PAD ASSEMBLY,CABLE TRACK	1
24	824091GT	SCREW, HHF, 3/8-16 X 1.25, 8, ZAG	2
25	1283516GT	CABLE TRACK, SX, 50 LINK, S65XC	1
25-	122663GT	END BRACKET,FIXED END	
25-	229169GT	FLATBAR, CLAMPS, CABLE TRACK	
25-	122668GT	GUIDE FINGER,PLASTIC	12
25-	218448GT	FINGER,GUIDE,CABLE TRACK On 4th link both sides	
25-	122662GT	END BRACKET,MOVING END	
25-	121065GT	FORMING,CLAMP,TOP,CABLE TRACK	
25-	122661GT	REPAIR KIT,4 LINK,W/GUIDE	1
26	1280840GT	CLAMP, HOSE, CABLE TRACK	1
27	1276451GT	CLAMP,CABLES	1
28	121065GT	FORMING,CLAMP,TOP,CABLE TRACK	1
29	824084GT	SCREW,HHF,1/4-20X3,8,ZAG	2
29B	1257867GT	SCREW,HHF,1/4-20X3.5,8,ZAG (air to platform and welder option)	2
29B-	228969GT	CLAMP, OPTION, CABLE TRACK (air to platform and welder option)	
30	1277924GT	NUT,NYLOCK FLG,1/4-20,F,ZAG	2

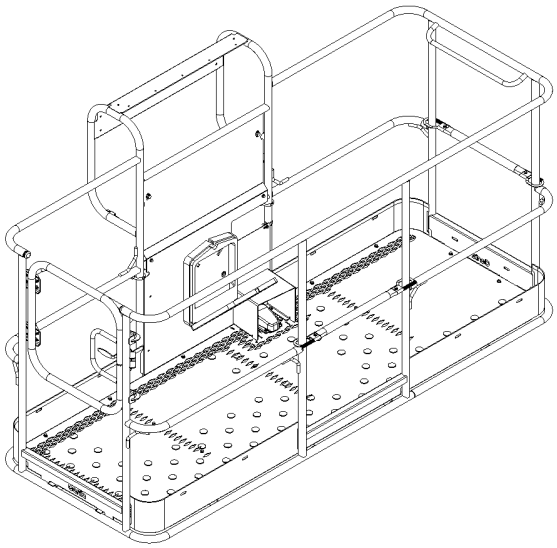

(1) Side Swing Gate Platform

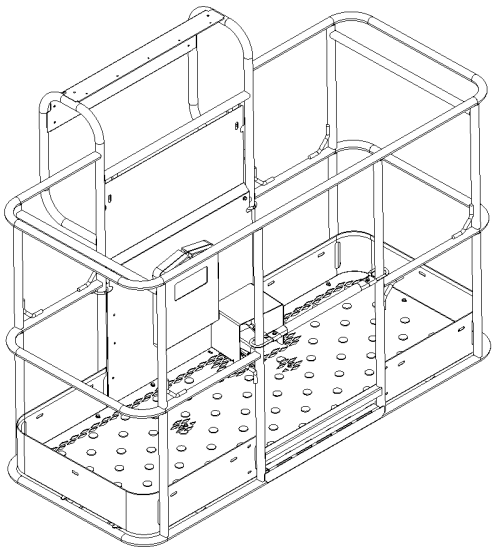

(2) Front Single Entry Platform

Item	Part No.	Description	Qty.
-		Complete Platform Assemblies with Decals	
A-		PLAT ASSY,8' W/SIDE GATE,S80/85 XC ANSI WORD USA and Canadian models	
B-		PLAT ASSY,8' W/SIDE GATE,S80/85 XC CE European models	
C-		PLAT ASSY,8' W/SIDE GATE,S80/85 XC AUS Australian models	
D-		PLAT ASSY,8' W/SIDE GATE,S80/85 XC ANSI SYM Asia and South America models	
E-		Complete Platform Assemblies and Platform Weldments without Decals (Warning tape & decals not included, refer to section 100 for decals)	
1	1272304GT	ASSY,8FT PLAT TRI LG,BLANK front and side entry	
1A-	1274859GT	ASSY,8' PLAT WELDMENT W/SIDE GATE flooring and decal plate not included	
1B	1272303GT	ASSY,6FT PLAT DUAL LG,BLANK front and side entry	
1B	1278858GT	6' PLATFORM W/SIDE SWING GATE KIT CE front and side entry	
1B-	1272303GT	ASSY,6FT PLAT DUAL LG,BLANK	
2	160809GT	ASSY,6FT PLATFORM,NO DECALS single entry	
2A-	73900GT	WELDMNT,6 FT PLATFORM flooring and decal plate not included	

702.1 Platform Installation

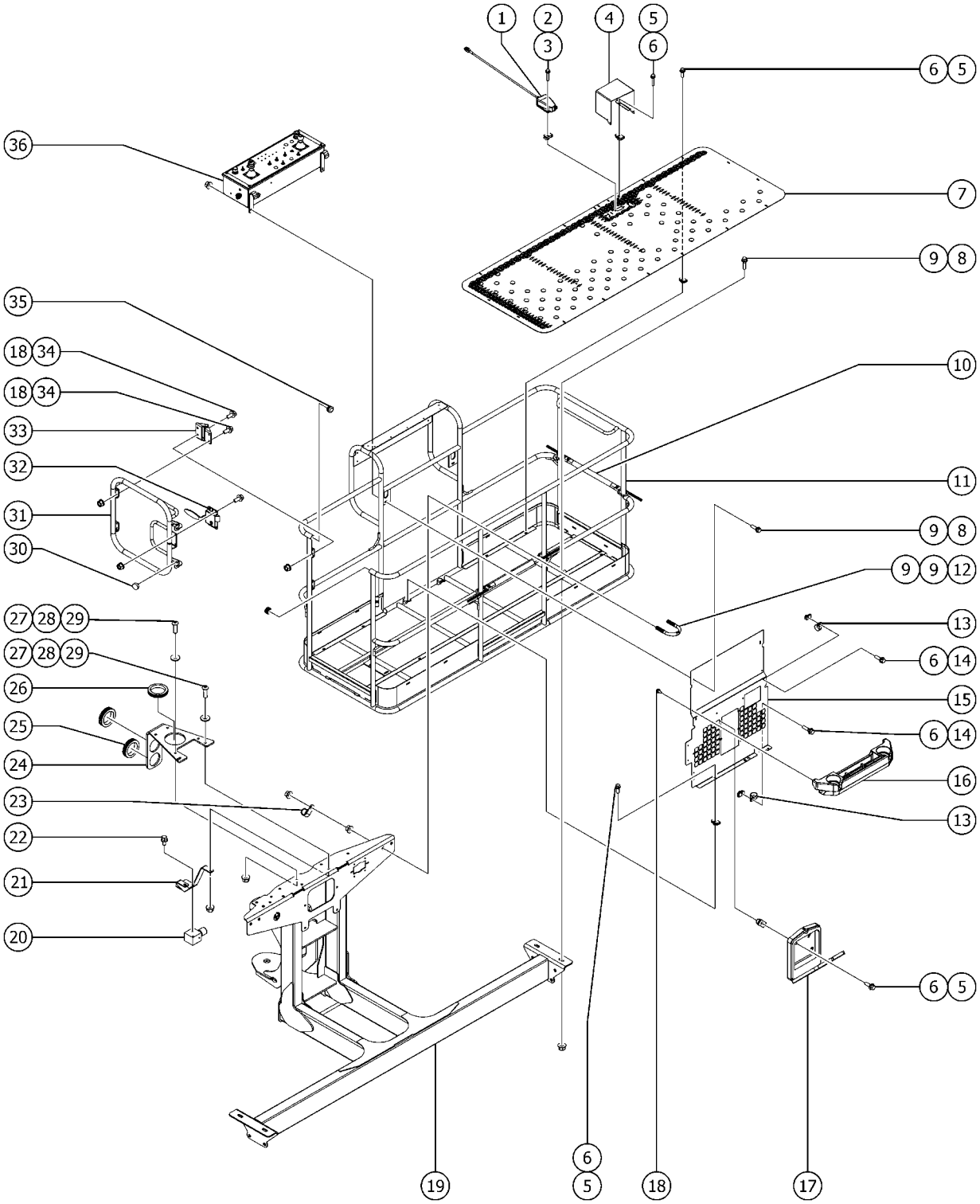

Item	Part No.	Description	Qty.
-	61283GT	SLEAVING,PARKER TEK,2.00" ..... from SN S65XCH-46309	30 Inches
1	227618GT	ASSEMBLY,FOOTSWITCH	1
2	1269641GT	SCREW,HHF-S,10-24X1,5,ZAG	2
3	73575GT	SPRING CLIP,10-24,.025-.125X.468,ZAG	2
4	147121GT	COVER, FOOT SWITCH, LARGE	1
5	824078GT	SCREW,HHF,1/4-20X.75,8,ZAG	
6	56912GT	SPRING CLIP,1/4-20,.025-.15X.54,ZAG	
7	73478GT	FLOORING, 8 FT PLATFORM*** ..... for 8' platform	1
7B	1267746GT	FLOORING, 72X30 PLATFORM ..... for 6' platform	1
8	824091GT	SCREW, HHF, 3/8-16 X 1.25, 8, ZAG	7
9	1274322GT	NUT,NYLOCK FLG,3/8-16,F,ZAG	11
10	12448GT	SLIDING MIDRAIL ASSY-STD ..... for 8' platform	2
10B	12448GT	SLIDING MIDRAIL ASSY-STD ..... for 6' platform	1
11	1274859GT	ASSY,8' PLAT WELDMENT W/SIDE GATE ..... for 8' platform (includes item 10)	1
11B	1272303GT	ASSY,6FT PLAT DUAL LG,BLANK	1
12	1251600GT	U-BOLT, FLATTENED, 1.5DIA. X 3/8 UNC,ZAG	2
13	56424GT	CLAMP,1.25X.5 RUBBER-CUSHION	3
14	824079GT	SCREW,HHF,1/4-20X1,8,ZAG	3
15	1275088GT	FORMING, ALUM. DECAL PLATE	1
16	1289552GT	KIT, PLATFORM WORK TRAY	1
16-	824225GT	SCREW,FHPM,10-32X.75,ZAG	
17	24514GT	BOX, INSTRUCTION STORAGE**	1
18	1256855	SCREW,HHF,1/4-20X.625,8,ZAG	16
19	1273734GT	WELDMENT,PLAT SUPPORT,15K,LS	1
20		Ref.MANIFOLD,JIB SELECT W/QD PLUG ..... (Refer to 404.1)	
21	110671GT	PLATE,JIB,ROTATE MANIFOLD	1
22	824077GT	SCREW, HHF, 1/4-20 X .5, 8, ZAG	2

702.1 Platform Installation

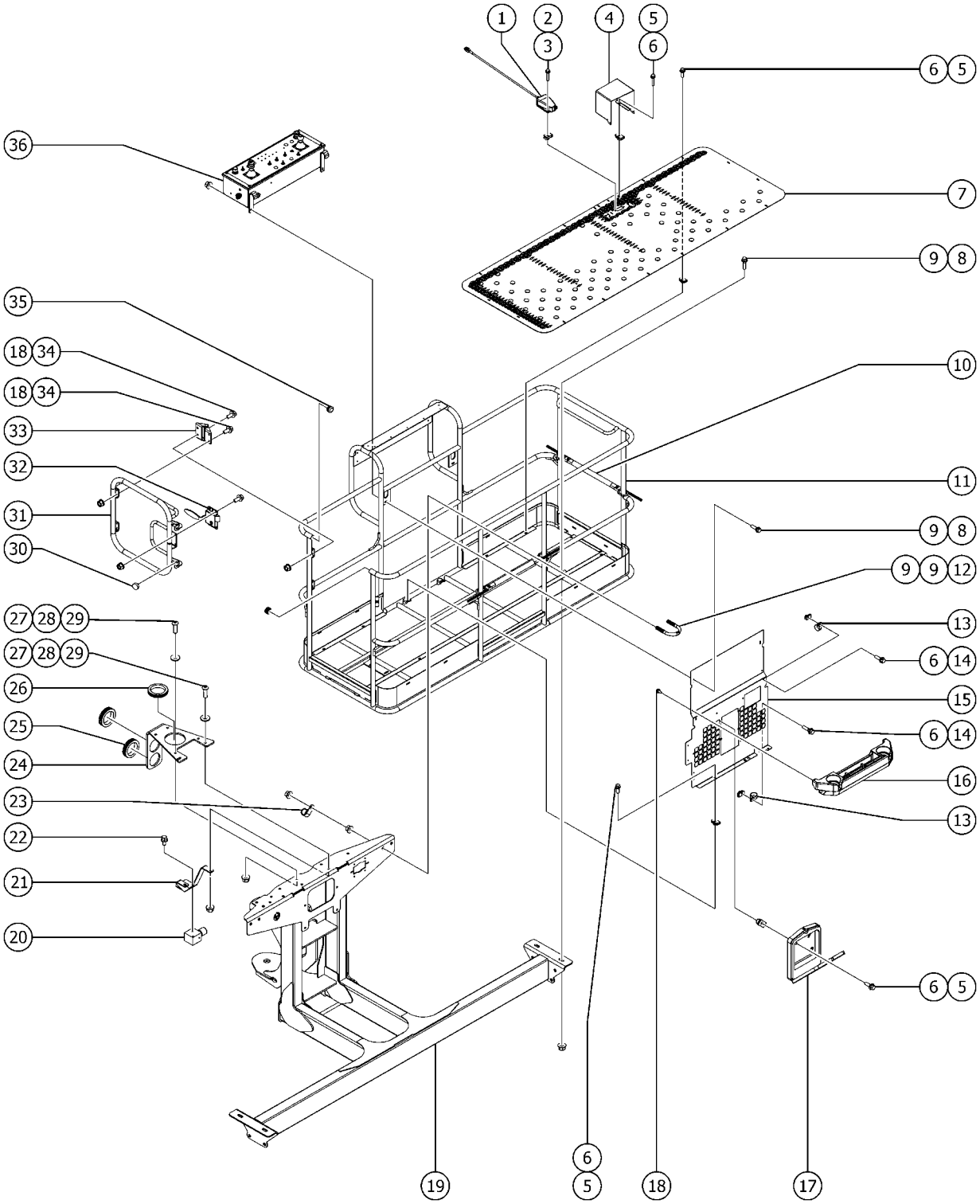

Item	Part No.	Description	Qty.
23	67897GT	CLAMP,0.56,#9 X 3/8,RUB CUSH	1
24	1289531GT	FORMING, CABLE GUIDE to SN S65XCH-46308	1
24B	1296077GT	PLATE, JIB/ROTATE MANIFOLD from SN S65XCH-46309	1
24B-	121582GT	CLAMP,CABLE STRAIN RELIEF	1
24B-	824082GT	SCREW, HHF, 1/4-20 X 1.75, 8, ZAG	2
24B-	1274165GT	NUT,NYLOCK,1/4-20,C,ZAG	2
25	47232GT	GROMMET,RUBBER 2 X 2.75 to SN S65XCH-46308	2
26	55067GT	GROMMET,RUBBER 3 X .19 X 3.5 to SN S65XCH-46308	1
27	128322GT	SCREW,5/16-18X1.00,SECURITY TO	4
28	825358GT	WASHER,FLAT,5/16,USS,ZAG	4
29	824028GT	NUT,TL FLG,5/16-18,G,ZAG to SN S65XCH-46308	4
29B	1274167GT	NUT,NYLOCK FLG,5/16-18,F,ZAG from SN S65XCH-46309	
30	43392GT	BUMPER,BATTERY BOX & RAILS	2
31	1265397GT	WELDMENT, SWING GATE	1
32	1267747GT	LATCH, SWING GATE	1
33	104804GT	HINGE, SPRING, LONG LEG	2
34	1277924GT	NUT,NYLOCK FLG,1/4-20,F,ZAG	12
35	55753GT	BUMPER, PLASTIC, 1.25 O.D.	
36		Ref. PLATFORM CONTROL BOX ASSEMBLY, (Refer to 703.1)	

703.1 Platform Control Box

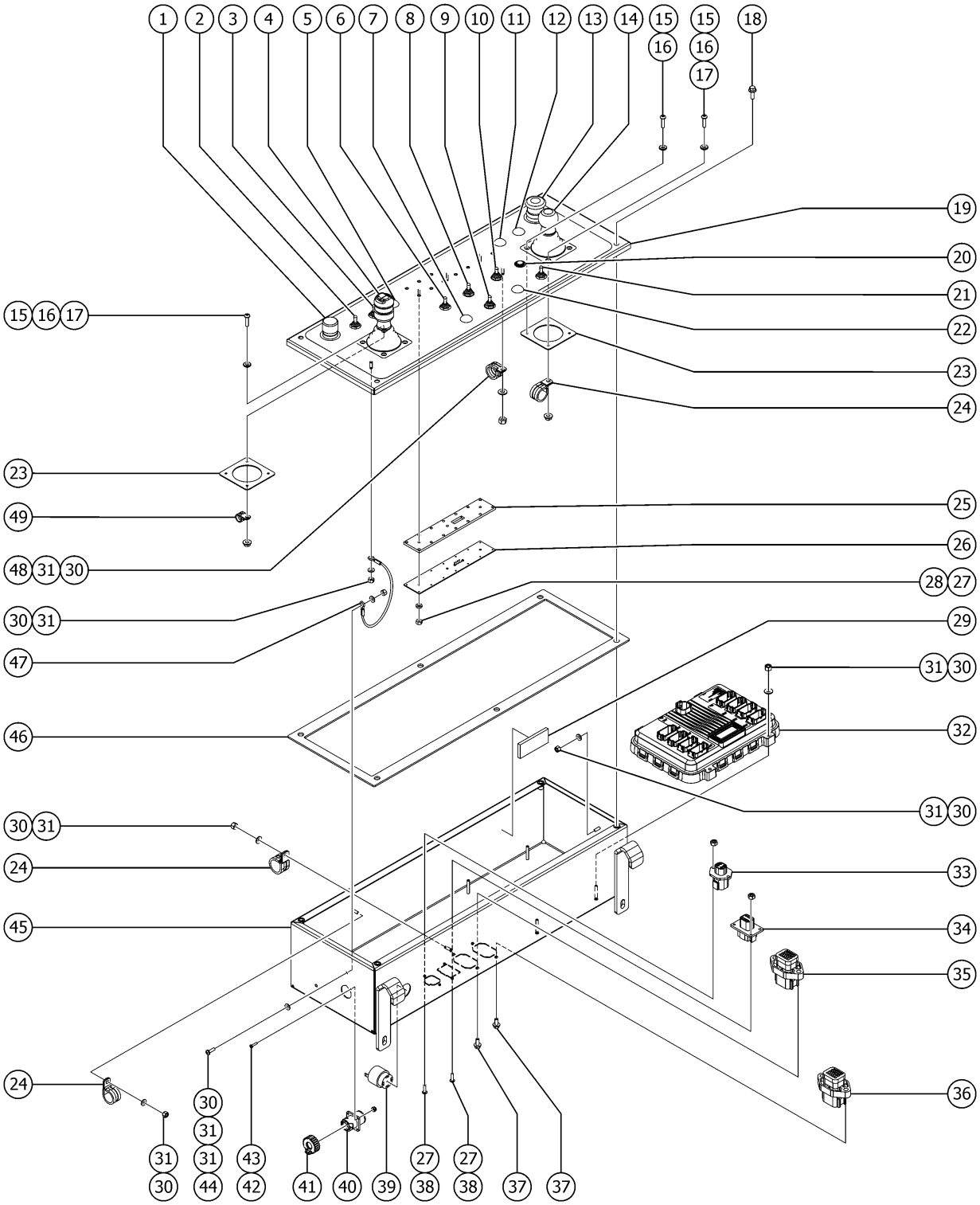

Item	Part No.	Description	Qty.
A		ASSEMBLY, PBOX, S-BOOM, XC contact Genie customer service for this part quotation.	1
1	66813GT	BUTTON,PUSH,BLACK W/SEAL*** horn	1
1-	66815GT	BASE, W/1 N.O. CONTACTS***	
2	128200GT	SWITCH TOGGLE ASSY SPDT 3P MOM platform level	1
3	128200GT	SWITCH TOGGLE ASSY SPDT 3P MOM platform rotate	1
4		REF. JOYSTICK (refer to 703.1)	
5	128200GT	SWITCH TOGGLE ASSY SPDT 3P MOM jib up/down	1
6	128200GT	SWITCH TOGGLE ASSY SPDT 3P MOM engine start	1
7	128584-SGT	SWITCH TOGGLE SPDT 2P MNT SHDR fuel select GAS/LPG models	
7B	229567GT	PLUG,SANTOPRENE .5 BLACK DOME diesel models	1
8	128203GT	SWITCH TOGGLE ASSY SPDT 2P MOM emergency power	1
9	128204GT	SWITCH TOGGLE ASSY SPDT 2P MNT engine RPM	1
10	128204GT	SWITCH TOGGLE ASSY SPDT 2P MNT drive select	1
11	229567GT	PLUG,SANTOPRENE .5 BLACK DOME generator switch (if equipped)	1
12	229567GT	PLUG,SANTOPRENE .5 BLACK DOME aircraft protection (if equipped)	1
13	66812GT	BUTTON,PUSH,RED MUSHROOM HEAD emergency stop switch	1
13-	146478GT	BOOT(BELLOWS),E-STOP,BLACK	
13-	66817GT	E-STOP W/ NC CONTACT	
14		REF. JOYSTICK Drive joystick needs to be ordered separately; (refer to 703.1)	
15	139338GT	SCREW PH M5-0.8X20 DIN 7500CE	8
16	1269498GT	SHOULDER WASHER, NYLON	8
17	1255753GT	NUT,FLG,M5-0.8,DIN6923,8,ZAB	2
18	824078GT	SCREW,HHF,1/4-20X.75,8,ZAG	4
19	1282472GT	WELDMENT, LID, CONTROLS, PLATFORM	1
20	218165GT	LIGHT,INDICATOR,RED 12V H-BRI drive enable indicator light	1
21	128200GT	SWITCH TOGGLE ASSY SPDT 3P MOM drive enable indicator switch	1
22	229567GT	PLUG,SANTOPRENE .5 BLACK DOME	1
23	1269497GT	GASKET, ISOLATION, JOYSTICK	2

703.1 Platform Control Box

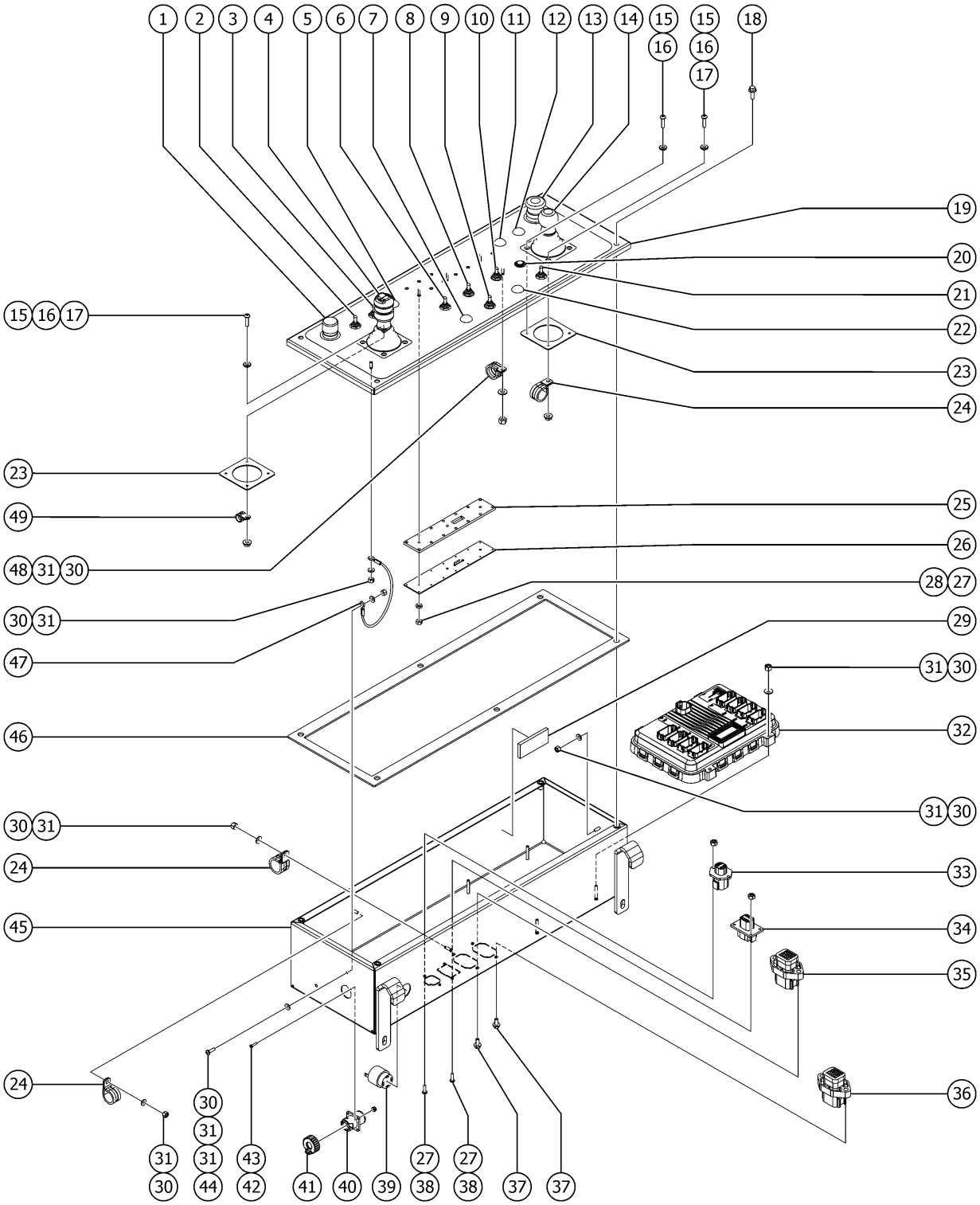

Item	Part No.	Description	Qty.
24	18666GT	CLAMP,1.00,#16 X 1/4,RUB CUSH	3
25	1278613GT	SPACER, XC PLATFORM INDICATORS	1
26	1278612GT	PCBA, XC PLATFORM INDICATORS	1
27	1274164GT	NUT,NYLOCK,6-32,A,ZAG	7
28	822224GT	WASHER, NYLON #10, 0.093	3
29	30997GT	CORROSION INHIBITOR,FOAM	1
30	1274168GT	NUT,NYLOCK,10-32,A,ZAG	12
31	1253185GT	WASHER,FLAT,#10,USS,ZAG	13
32	1284524GT	ECU, PLATFORM, S-XC, PROGRAMMED (Contact Genie Parts Sales with full model and SN)	1
33	73717GT	CONN, RECEP, 4 WAY, DEUTSCH, DTP, FLANGE	1
34	87755GT	CONN, RECEP, 8 WAY, DEUTSCH, DT, GRAY/FLANGE	1
35	1265862GT	CONN, RECEP, 18 WAY, DEUTSCH, DTV, GRAY/FLANGE	1
36	226948GT	CONN, RECEP, 18 WAY, DEUTSCH, DTV, BLACK/FLANGE	1
37	218457GT	SCREW,HHF,M5X12,DIN6921,10.9,Z	4
38	824214GT	SCREW,PHPM,6-32X.50,ZAG	4
39	39540GT	ALARM, STEADY TONE***	1
40	1272122GT	CONN, RECEP, 5 WAY, DEUTSCH, HD10	1
41	1272123GT	DUST CAP, RECEPTACLE, 5 WAY, CIRCULAR	1
42	1253477GT	SCREW,PHPM,4-40X.5,ZAG	2
43	40766GT	NUT,NYLOCK,4-40	2
44	1257227GT	SCREW,PHPM,10-32X.625,ZAG	1
45	1279851GT	WELDMENT,BOX,PLATFORM CONTROL,XC	1
46	81488GT	GASKET,PLATFORM CONTROL BOX	1
47	1258952GT	LANYARD, BOX, CONTROL, PLATFORM	2
48	13268GT	CLAMP,0.75,#12 X 1/4,RUB CUSH	1
49	6833GT	CLAMP,0.50,#8 X 1/4,RUB CUSH	1

704.1 Joysticks

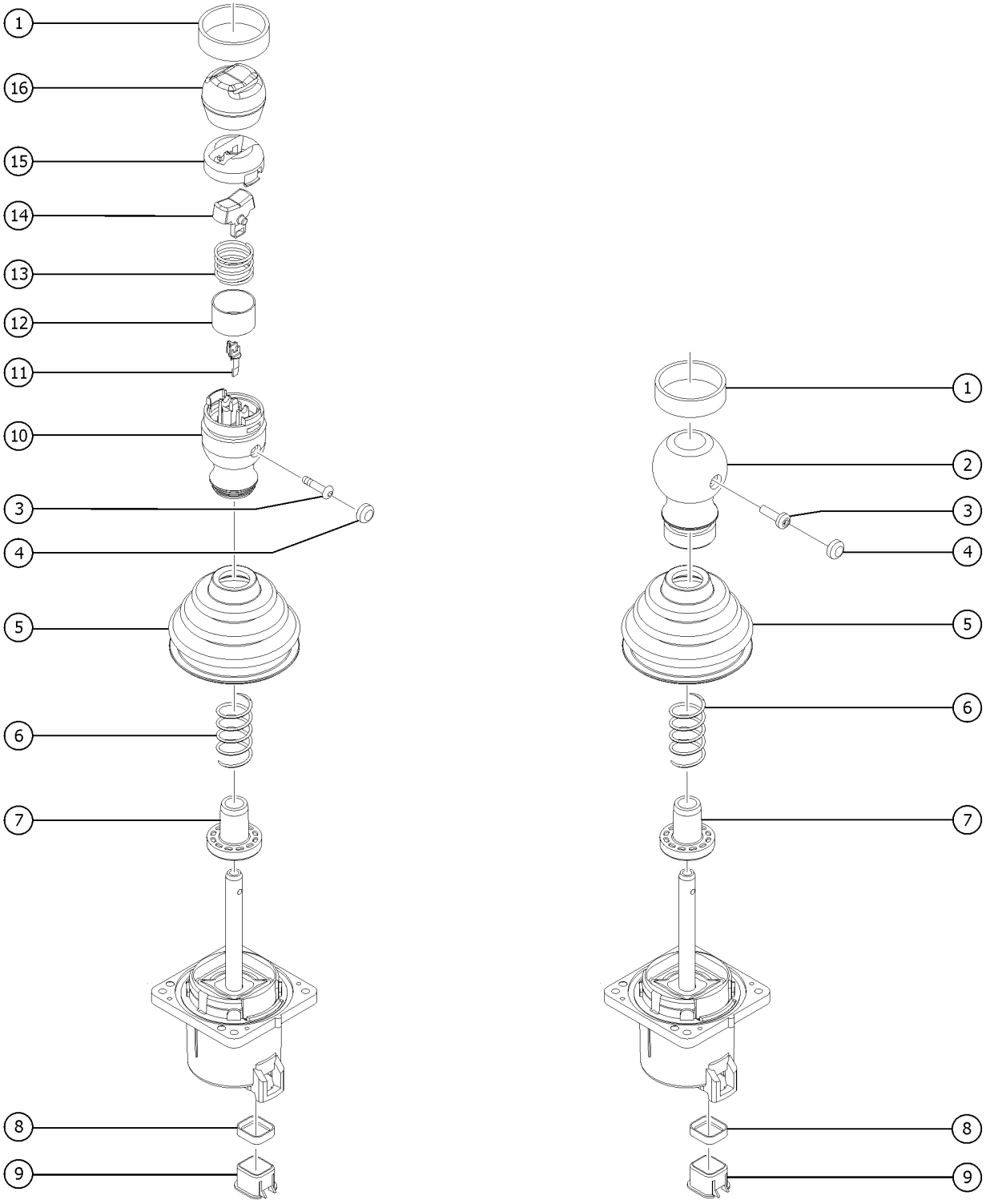

704.1 Joysticks

Item	Part No.	Description	Qty.
A-	1275259GT	JOYSTICK, ISOLATED, 2 AXIS ROCKER OEM joystick (calibration required after replacement)	1
B-	1275248GT	JOYSTICK, ISOLATED, 2 AXIS OEM joystick (calibration required after replacement)	1
C-	1275258GT	JOYSTICK, ISOLATED, 1 AXIS ROCKER OEM joystick (calibration required after replacement)	1
D-	83098GT	TERM,AMP MTE,SOC,22-26 GA BULK	
1	1271713GT	SHRINK TUBE, BLU, 3:1, 40MM	2
2	62392GT	KNOB,JOYSTICK, 62390/62391	1
3	T112626GT	SCREW, PHM, #6-32 X .625 ZINC	1
4	1269499GT	PLUG, JOYSTICK HANDLE	2
5	139598GT	BOOT,JOYSTICK	1
6		SPRING,JOYSTK CENTR,62390/91 (no longer available from supplier)	
7	119915GT	COLLAR,JOYSTICK,CENTER	1
8	128000GT	SEAL, CONNECTOR (DT JOYSTICKS)	1
9	128001GT	SLEEVE,CONNECTOR,DT JOYSTICKS	1
10	75449GT	KNOB,ROCKER JOYSTICK 75565	1
11	75448GT	SUPPORT,SENSOR,JOYSTICK	1
12	75447GT	SWITCH SHIELD,ROCK JOYSTK75565	1
13	75446GT	SPRING,SWITCH CENTERING,75565	1
14	75445GT	ROCKER ASSY.,MAGNETIC 75565	1
15	75444GT	ROCKER,RETAINER, 75565	1
16	75443GT	BOOT, ROCKER JOYSTICK 75565	1

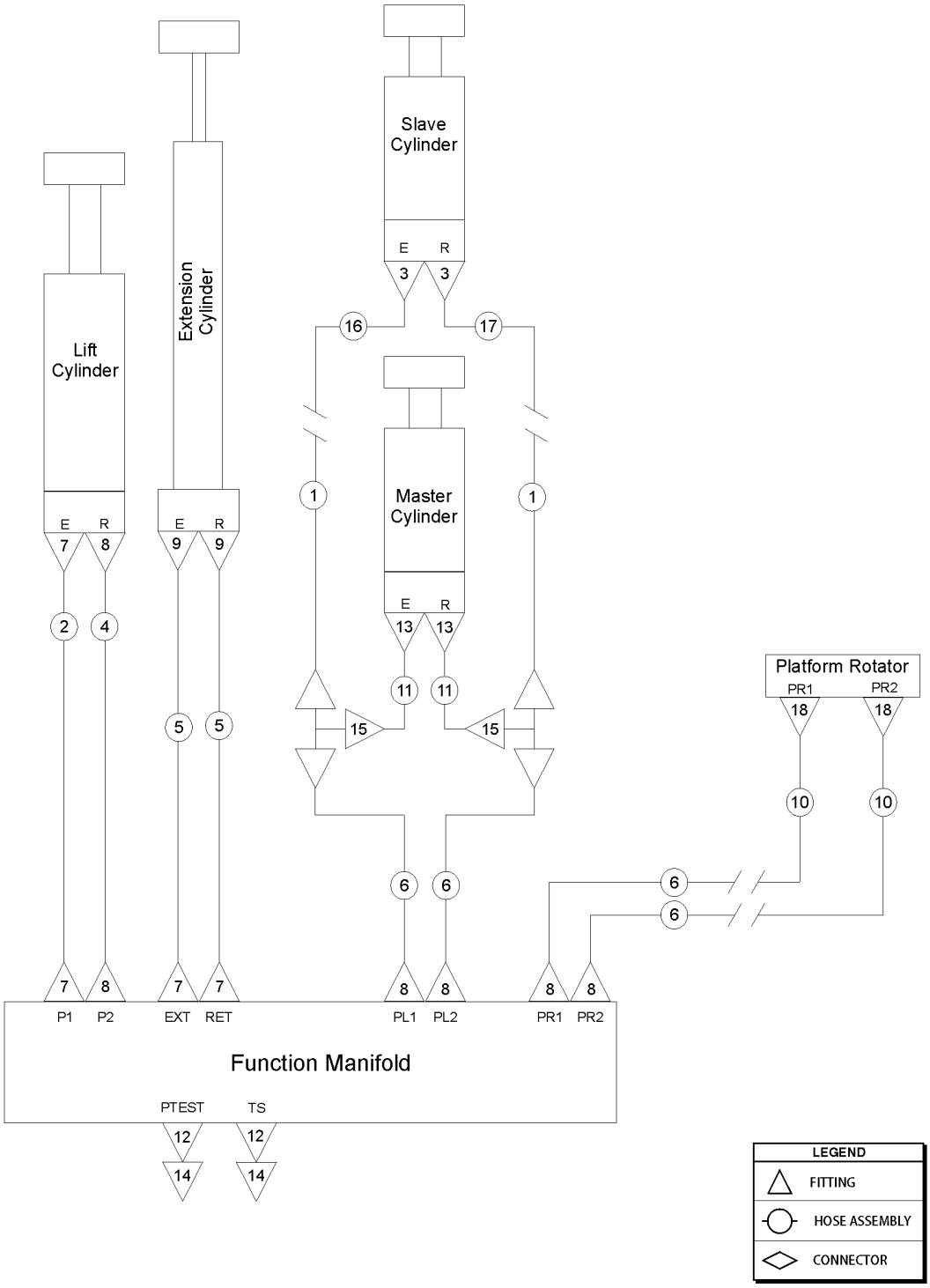
Slave Cylinder
E R
3 3
16 17
Lift Cylinder
Extension Cylinder
Master Cylinder
1 1
E R
7 8
E R
9 9
E R
13 13
2 4
5 5
11 11
15 15
Platform Rotator
PR1 PR2
18 18
10 10
6 6
6 6
7 8
7 7
8 8
8 8
P1 P2
EXT RET
PL1 PL2
PR1 PR2
Function Manifold
PTEST TS
12 12
14 14
LEGEND
FITTING
HOSE ASSEMBLY
CONNECTOR

Item	Part No.	Description	Qty.
A		The hose lengths below reflect the length of the hose only. Refer to the 'Fittings Cross Reference' to match Genie part numbers to Parker part numbers.	
B	48767GT	SLEEVE,NYLON,1.42 ID protective hose sleeve, 1.42" diameter (near platform rotator)	
C	49219GT	SLEEVE,NYLON,2.19 ID,BULK protective hose sleeve, 2.19" diameter (near platform rotator)	
1	1288893-70866GT	HOSE ASSY,-6,STR FEM,STR FEM 4 to SN S60XCH-46949	2
1B	1288893-72639GT	ASSY, HOSE, HYD, -6, 3000, STR, STR from SN S60XCH-46950	2
2	49143-12329GT	HOSE ASSY,1/2,90 FEM,STR FEM	1
3	48905GT	CONNECTOR, 520120-4	2
4	49128-12309GT	HOSE ASSY,3/8,STR FEM,STR,90D	1
5	49183-13492GT	HOSE ASSY,1/2,STR FEM,STR FEM	2
6	1288890-10630GT	HOSE ASSY,-6,STR FEM,BULKHEAD	4
7	48933GT	CONN,520120-8***	4
8	48916GT	CONN, 520120-6	6
9	48937GT	ELBOW,45D,520320-8	2
10	1288893-73039GT	HOSE ASSY,-6,STR FEM,STR FEM 4	2
11	1288892-6102GT	HOSE ASSY,-6,90 FEM,STR FEM 4	2
12	48997GT	NIPPLE,DIAGNOSTIC,#4	4
13	48904GT	ELBOW, 90D, 520220-4	2
14	48880GT	CAP,DIAGNOSTIC NIPPLE	4
15	48875GT	TEE,RUN,SWIVEL,520432-6	2
16	77310-1693GT	HOSE ASSY,-4,STR FEM,BULKHEAD	1
17	77310-1575GT	HOSE ASSY,-4,STR FEM,BULKHEAD	1
18	48907GT	ELBOW,45D,520320-4	2

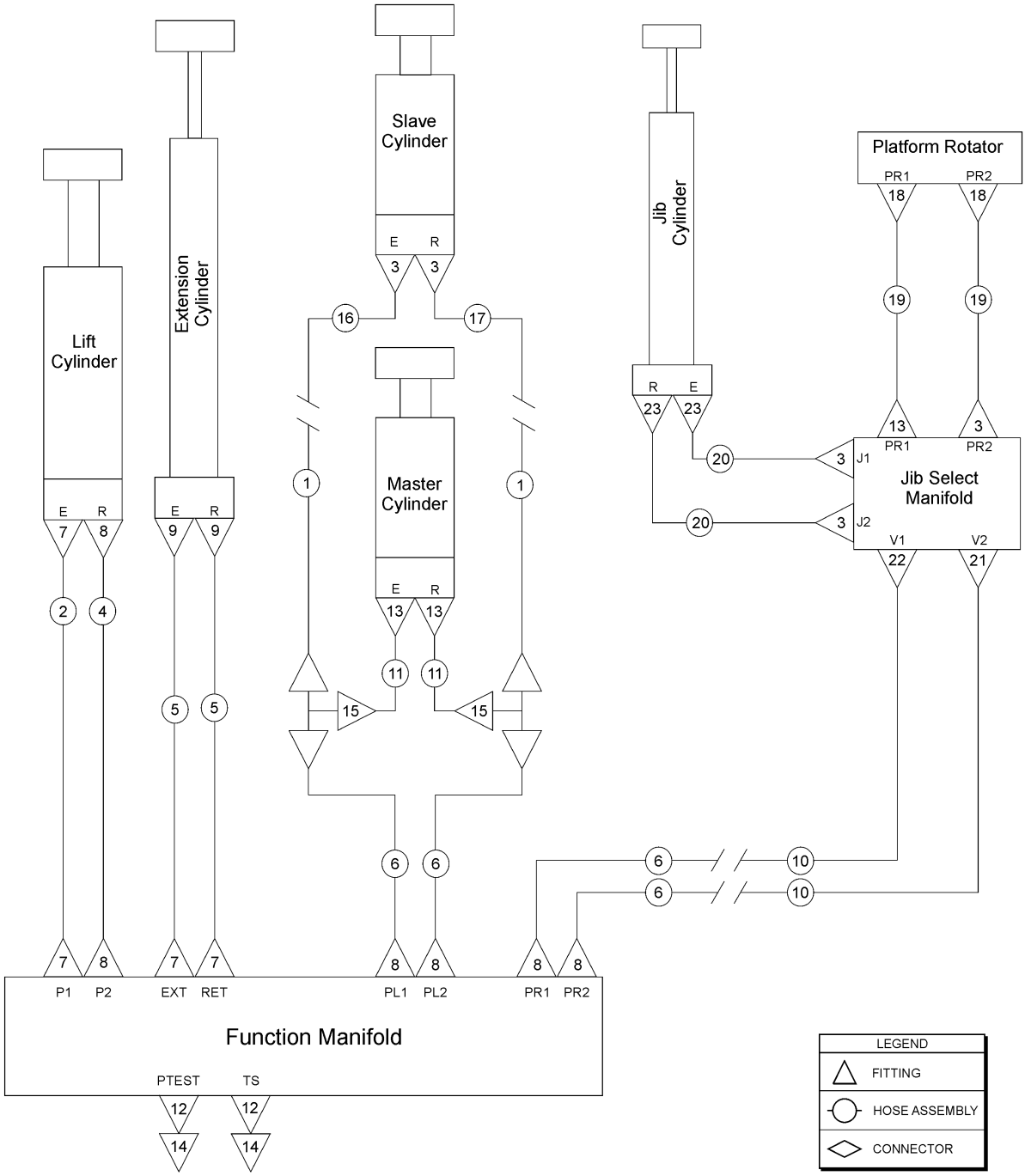
Slave Cylinder
Jib Cylinder
Platform Rotator
PR1
PR2
18
18
19
19
E
R
3
3
16
17
R
E
23
23
13
3
PR1
PR2
Lift Cylinder
Extension Cylinder
Master Cylinder
20
3
J1
Jib Select Manifold
20
3
J2
V1
V2
22
21
1
1
E
R
7
8
E
R
9
9
E
R
13
13
2
4
11
11
5
5
15
15
6
6
6
6
10
10
7
8
7
7
8
8
8
8
P1
P2
EXT
RET
PL1
PL2
PR1
PR2
Function Manifold
PTEST
TS
12
12
14
14
LEGEND
FITTING
HOSE ASSEMBLY
CONNECTOR

Item	Part No.	Description	Qty.
A		The hose lengths below reflect the length of the hose only. Refer to the 'Fittings Cross Reference' to match Genie part numbers to Parker part numbers.	
B	48767GT	SLEEVE,NYLON,1.42 ID protective hose sleeve, 1.42" diameter (near platform rotator)	
C	49219GT	SLEEVE,NYLON,2.19 ID,BULK protective hose sleeve, 2.19" diameter (near platform rotator)	
1	1288893-70866GT	HOSE ASSY,-6,STR FEM,STR FEM 4 to SN S65XCH-46949	2
1B	1288893-72639GT	ASSY, HOSE, HYD, -6, 3000, STR, STR from SN S65XCH-46950	2
2	49143-12329GT	HOSE ASSY,1/2,90 FEM,STR FEM	1
3	48905GT	CONNECTOR, 520120-4	5
4	49128-12309GT	HOSE ASSY,3/8,STR FEM,STR,90D	1
5	49183-13492GT	HOSE ASSY,1/2,STR FEM,STR FEM	2
6	1288890-10630GT	HOSE ASSY,-6,STR FEM,BULKHEAD	4
7	48933GT	CONN,520120-8***	4
8	48916GT	CONN, 520120-6	6
9	48937GT	ELBOW,45D,520320-8	2
10	49130-81417GT	HOSE ASSY,-6,STR FEM,STR FEM	2
11	1288892-6102GT	HOSE ASSY,-6,90 FEM,STR FEM 4	2
12	48997GT	NIPPLE,DIAGNOSTIC,#4	4
13	48904GT	ELBOW, 90D, 520220-4	3
14	48880GT	CAP,DIAGNOSTIC NIPPLE	4
15	48875GT	TEE,RUN,SWIVEL,520432-6	2
16	77310-1693GT	HOSE ASSY,-4,STR FEM,BULKHEAD	1
17	77310-1575GT	HOSE ASSY,-4,STR FEM,BULKHEAD	1
18	48907GT	ELBOW,45D,520320-4	2
19	49119-2878GT	ASSY, HOSE, HYD, -4, 3250, STR, STR	2
20	49119-4878GT	HOSE ASSY,1/4,STR FEM,STR FEM	2
21	56003GT	ELBOW,90D,LONG,521520-6	1
22	48915GT	ELBOW,90D,520220-6	1
23	48927GT	CONN,520120-6-4 to SN S65XCH-46308	2
23B	48912GT	CONN,520120-4-6*** from SN S65XCH-46309	2

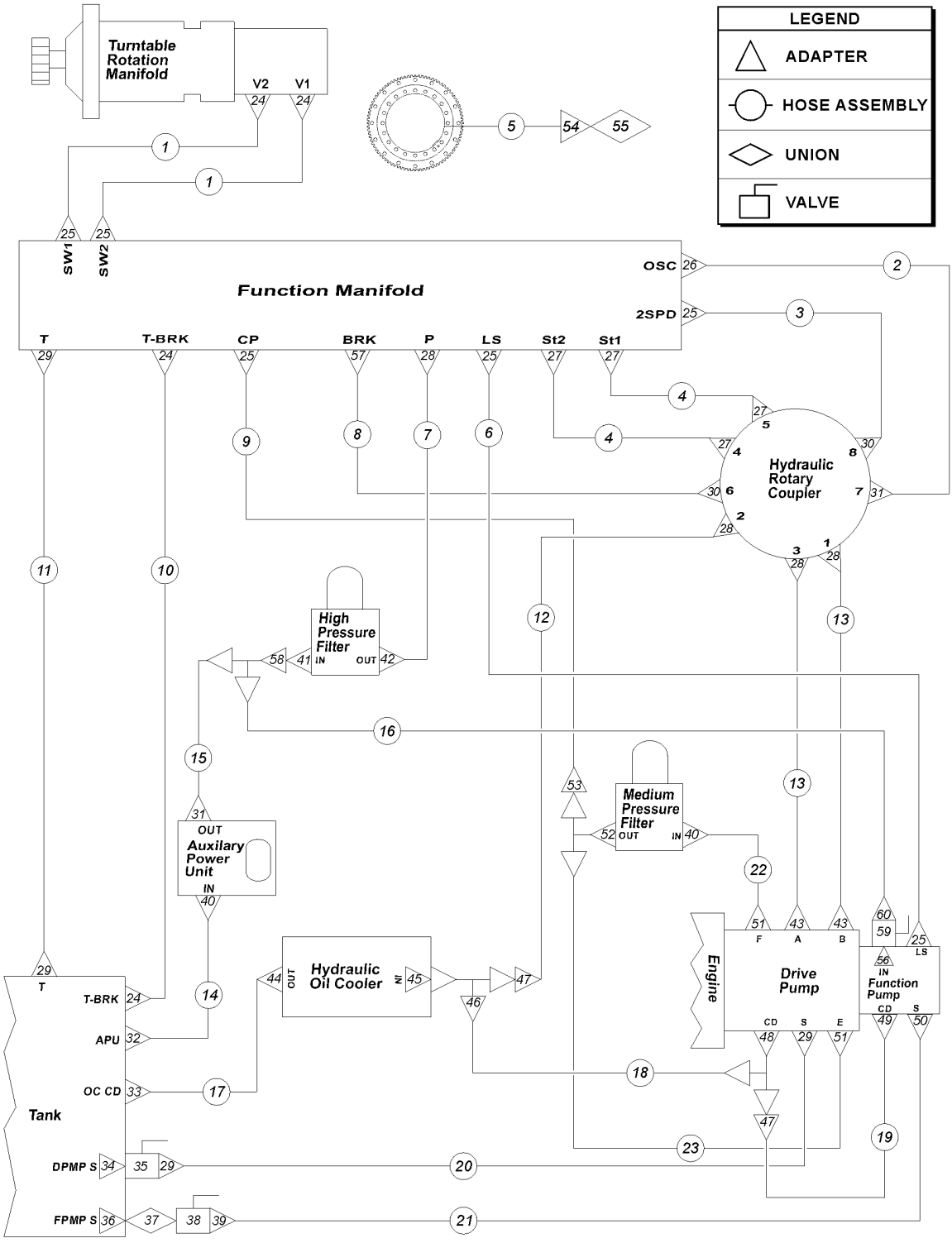
LEGEND
ADAPTER
HOSE ASSEMBLY
UNION
VALVE
Turntable Rotation Manifold
V2
V1
Function Manifold
SW1
SW2
OSC
2SPD
T
T-BRK
CP
BRK
P
LS
St2
St1
Hydraulic Rotary Coupler
High Pressure Filter
Medium Pressure Filter
Auxilary Power Unit
Hydraulic Oil Cooler
Drive Pump
Engine
Function Pump
Tank
APU
OC CD
DPMP S
FPMP S

Item	Part No.	Description	Qty.
A		The hose lengths below reflect the length of the hose only. Refer to the 'Fittings Cross Reference' to match Genie part numbers to Parker part numbers.	
1	49117-7480GT	HOSE ASSY,-4,STR FEM,90 FEM	2
2	49130-5906GT	HOSE ASSY,-6,STR FEM,STR FEM	1
3	49119-6890GT	HOSE ASSY,-4,STR FEM,STR FEM	1
4	49130-5782GT	HOSE ASSY 3/8, STR FEM,STR FEM	2
5	49176-8638GT	HOSE ASSY,-4,STR FEM,90 FEM	1
6	49119-7283GT	HOSE ASSY,-4,STR FEM,STR FEM	1
7	61074-7254GT	HOSE ASSY,-12,STR FEM,90 FEM	1
8	49119-7480GT	HOSE ASSY,1/4,STR FEM,STR FEM, 74.80	1
9	49117-8858GT	HOSE ASSY,-4,STR FEM,90 FEM	1
10	49117-2913GT	HOSE ASSY,-4,STR FEM,90 FEM	1
11	88949-3828GT	HOSE ASSY 1",STR FEM,STR FEM	1
12	49150-7283GT	HOSE ASSY,-12,STR FEM,STR FEM	1
13	94374-6421GT	HOSE ASSY,-12,STR FEM,90 FEM	2
14	94465-3650GT	HOSE ASSY,1/2"	1
15	49128-6299GT	HOSE ASSY,-6,90 FEM,STR FEM	1
16	61073-3930GT	HOSE ASSY,,3/4",90,FEM,STR FEM to SN S65XCH-45958	
16B	61073-3330GT	HOSE ASSY,3/4,90 FEM,STR FEM (from SN S65XCH-45959 to SN S65XCH-46908) (to SN S60XCH-46908)	1
16C	61073-3730GT	HOSE ASSY,3/4" 90 FEM STR FEM (from SN S60XCH-46909) (from SN S65XCH-46909)	1
17	88942-4331GT	HOSE ASSY,-16,STR FEM,90 FEM	1
18	88942-10827GT	HOSE ASSY,-16,STR FEM,90 FEM	1
19	49150-2756GT	HOSE ASSY,-12,STR FEM,90 FEM	1
20	88942-8354GT	HOSE ASSY,1",90 FEM,STR FEM	1
21	1288891-8268GT	HOSE ASSY,-20,STR FEM,90 FEM	1
22	49143-3629GT	HOSE ASSY,1/2,90 FEM,STR FEM	1
23	49143-3429GT	HOSE ASSY,1/2,90 FEM,STR FEM	1
24	48912GT	CONN,520120-4-6***	4
25	48905GT	CONNECTOR, 520120-4	7

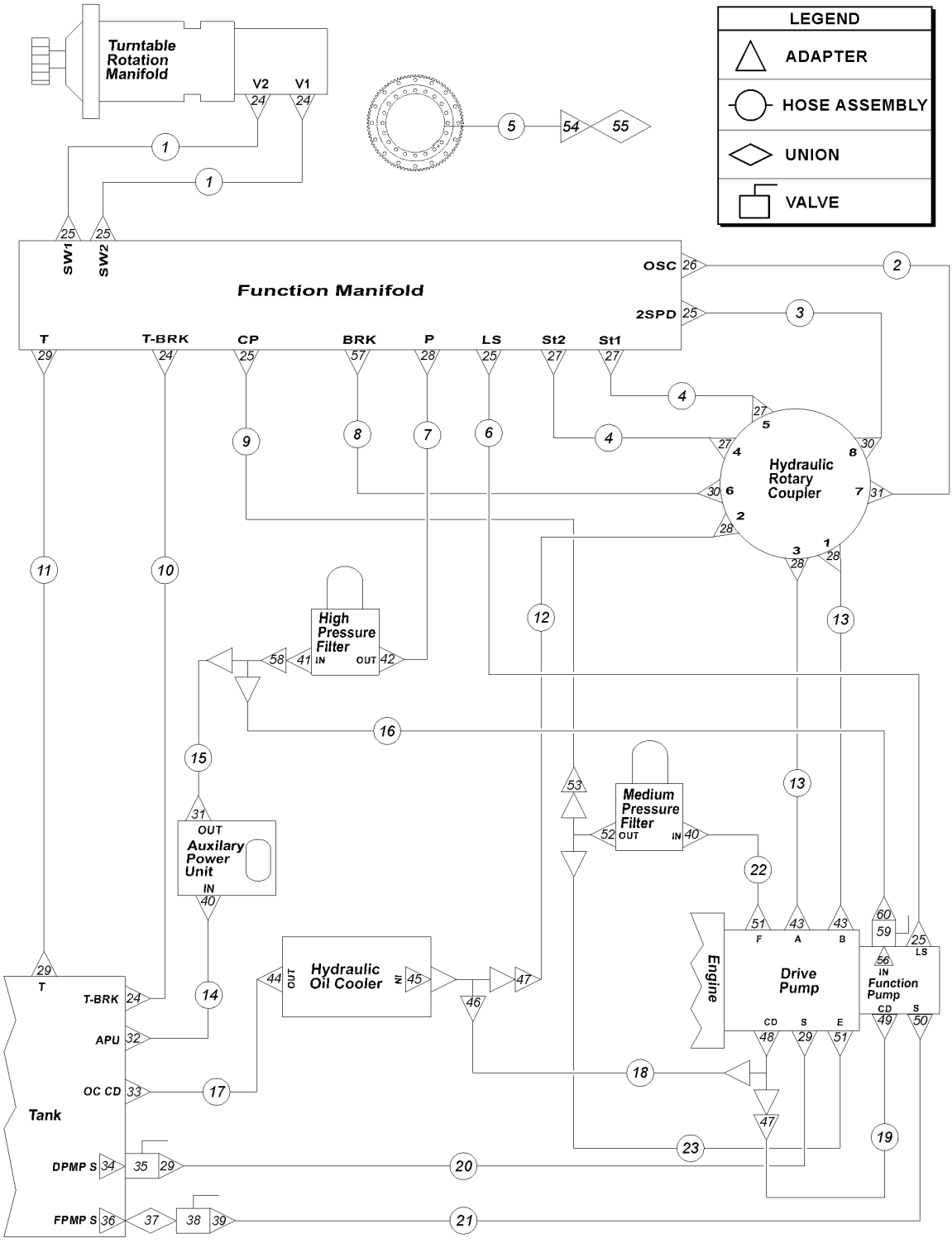
LEGEND
ADAPTER
HOSE ASSEMBLY
UNION
VALVE
Turntable Rotation Manifold
V2
V1
Function Manifold
SW1
SW2
OSC
2SPD
T
T-BRK
CP
BRK
P
LS
St2
St1
Hydraulic Rotary Coupler
High Pressure Filter
IN
OUT
Medium Pressure Filter
Auxilary Power Unit
Hydraulic Oil Cooler
Engine
Drive Pump
F
A
B
CD
S
E
Function Pump
LS
Tank
APU
OC CD
DPMP S
FPMP S

Item	Part No.	Description	Qty.
26	48930GT	CONN,520120-6-8	1
27	48916GT	CONN, 520120-6	4
28	48960GT	FITTING,CONN,520120-12***	4
29	48984GT	CONN, 520120-16	4
30	48904GT	ELBOW, 90D, 520220-4	2
31	48915GT	ELBOW,90D,520220-6	2
32	48943GT	FITTING,CONN,520120-8-6	1
33	48959GT	FITTING,ELBOW,90D,520220-12	1
34	101490GT	STRAINER,16 SAE F/24 SAE M	1
35	48996GT	VALVE,BALL,16 MSAE-16 FSAE***	1
36	101491GT	STRAINER,20 SAE F/24 SAE M***	1
37	61263GT	UNION,STR.THREAD 20	1
38	101494GT	VALVE,BALL,FSAE-20,FSAE-20	1
39	75654GT	CONN,520120-20	1
40	48932GT	FITTING,ELBOW,90D,520220-8***	2
41	1279568GT	TEE, RUN, 12-12-6 WITH CHECK (to SN S60XCH-46908) (to SN S65XCH-46908)	1
41B	48961GT	TEE,RUN,520428-12 (from SN S60XCH-46909) (from SN S65XCH-46909)	1
42	48963GT	FITTING,ELBOW,45D,520320-12***	1
43	48977GT	CONN,520120-12-16	2
44	49519GT	CONN,520120-16-12	1
45	48878GT	ELBOW,90D,520220-16-12	1
46	42787GT	TEE,RUN,SWIVEL,520432-16	1
47	101293GT	REDUCER,520123-16-12	2
48	1283576GT	TEE, BRANCH, -16M-16F-16M, ORFS	1
49	48975GT	CONN,520120-12-10	1
50	1276485GT	CONN.520120-20-24	1
51	48946GT	CONN,520120-8-10	2
52	48936GT	TEE,BRANCH,520429-8	1

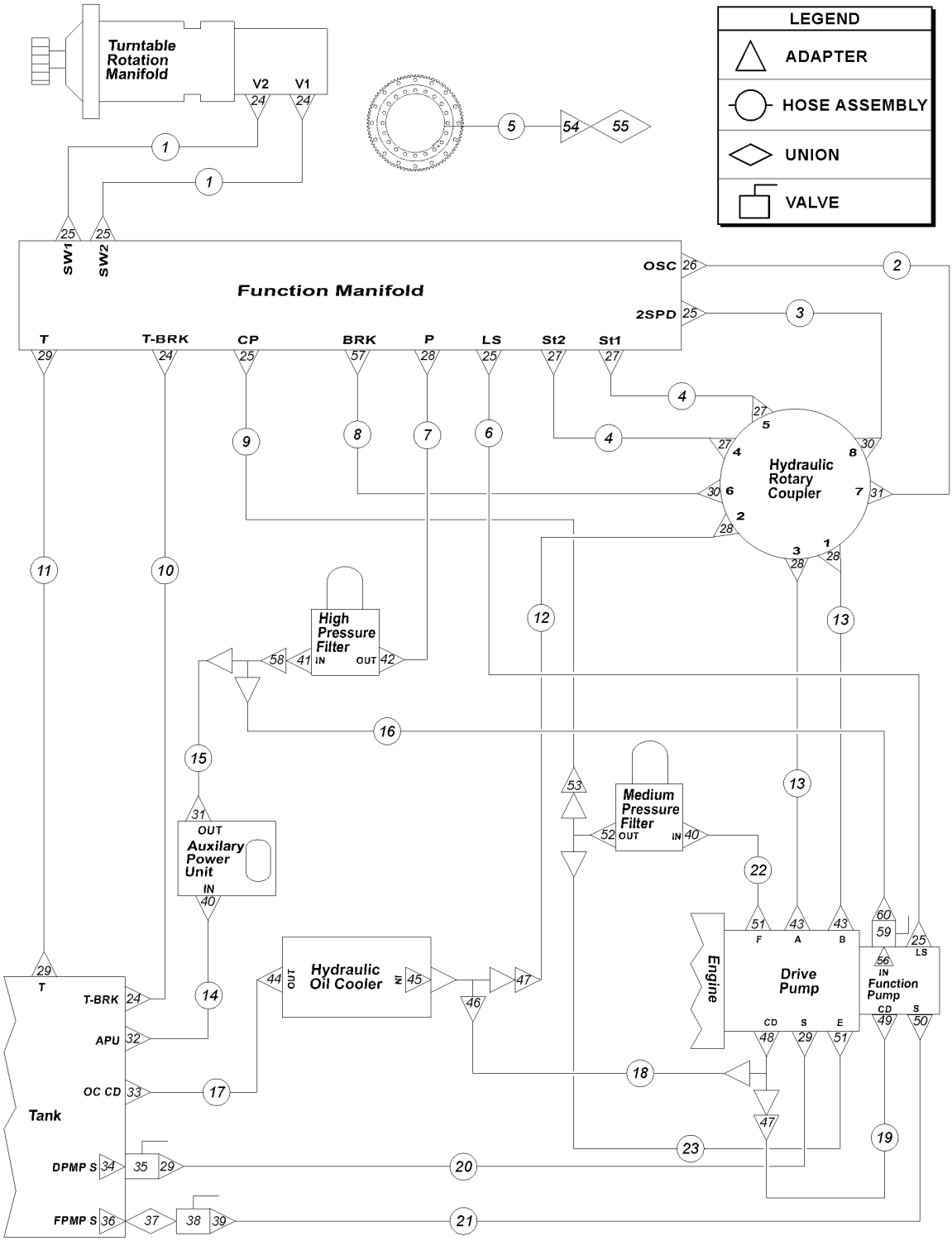
LEGEND
ADAPTER
HOSE ASSEMBLY
UNION
VALVE
Turntable Rotation Manifold
V2
V1
Function Manifold
SW1
SW2
OSC
2SPD
T
T-BRK
CP
BRK
P
LS
St2
St1
Hydraulic Rotary Coupler
High Pressure Filter
IN
OUT
Medium Pressure Filter
Auxilary Power Unit
Hydraulic Oil Cooler
Engine
Drive Pump
F
A
B
CD
S
E
Function Pump
LS
Tank
APU
OC CD
DPMP S
FPMP S

Item	Part No.	Description	Qty.
53	48941GT	REDUCER,520123-8-4	1
54	48885GT	CONNECTOR,BULKHEAD,FEMALE-4	1
55	94643GT	ZERK,GREASE,5/16-24,STRAIT	1
56	48976GT	ELBOW,90D,520220-12-16 (from SN S65XCH-45959) (to SN S60XCH-46908) (to SN S65XCH-46908)	
57	48904GT	ELBOW, 90D, 520220-4 to SN S65XCH-46018	
57B	48905GT	CONNECTOR, 520120-4 from SN65XCH-46019	
58	87033GT	REDUCER,520123-12-6 (from SN S60XCH-46909) (from SN S65XCH-46909)	1
59	48898GT	VALVE,CHK,#12PORT-#12MALEORFS (from SN S60XCH-46909) (from SN S65XCH-46909)	1
60	1305366GT	CONN,520120-12-6 (from SN S60XCH-46909) (from SN S65XCH-46909)	1

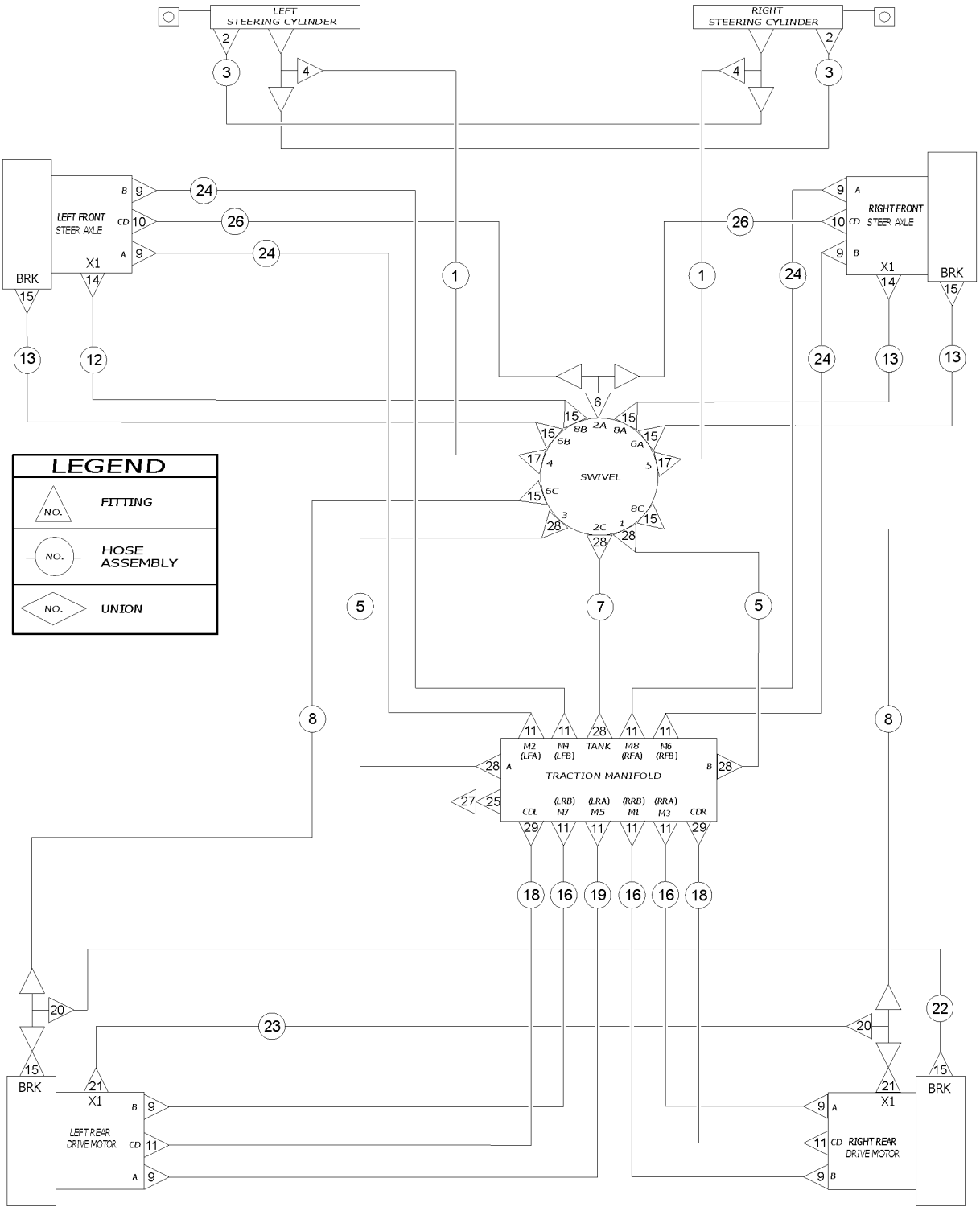
LEFT STEERING CYLINDER
RIGHT STEERING CYLINDER
LEFT FRONT STEER AXLE
RIGHT FRONT STEER AXLE
BRK
X1
SWIVEL
TRACTION MANIFOLD
M2 (LFA)
M4 (LFB)
TANK
M8 (RFA)
M6 (RFB)
(LRB) M7
(LRA) M5
(RRB) M1
(RRA) M3
CDL
CDR
LEFT REAR DRIVE MOTOR
RIGHT REAR DRIVE MOTOR
LEGEND
NO. FITTING
NO. HOSE ASSEMBLY
NO. UNION

Item	Part No.	Description	Qty.
1	49130-5118GT	HOSE ASSEMBLY - 3/8" STR FEM, STR FEM	2
2	48915GT	ELBOW,90D,520220-6	2
3	49130-2482GT	ASSY, HOSE, HYD, 3/8, 3000, STR	2
4	48918GT	TEE,RUN,520428-6	2
5	94374-2430GT	HOSE ASSY,3/4,90 FEM,STR FEM	2
6	48936GT	TEE,BRANCH,520429-8	1
7	94466-2336GT	HOSE ASSY,3/4"	1
8	49119-7578GT	HOSE ASSY,1/4 STR FEM,STR FEM	2
9	48948GT	CONN,520120-8-12	8
10	48930GT	CONN,520120-6-8	2
11	48933GT	CONN,520120-8***	10
12	49117-10691GT	HOSE ASSY 1/4,90 FEM STR FEM	1
13	49117-10091GT	HOSE ASSY 1/4.90 FEM STR FEM	3
14	48912GT	CONN,520120-4-6***	2
15	48905GT	CONNECTOR, 520120-4	10
16	75278-5029GT	HOSE ASSY,1/2,90 FEM,STR FEM	3
17	48916GT	CONN, 520120-6	2
18	94464-4986GT	HOSE ASSY,1/2"***	2
19	75278-5129GT	HOSE ASSY,1/2,90 FEM,STR FEM**	1
20	48908GT	FITTING,TEE,RUN,SWIVEL520432-4	2
21	48911GT	ELBOW,90D,520220-4-6***	2
22	49117-6291GT	HOSE ASSY,1/4,90 FEM,STR FEM	1
23	49117-6091GT	HOSE ASSY,1/4,90 FEM,STR FEM**	1
24	81812-13292GT	HOSE ASSY,1/2"	4
25	48997GT	NIPPLE,DIAGNOSTIC,#4	1
26	49131-9603GT	HOSE ASSEMBLY 3/8"	2
27	48880GT	CAP,DIAGNOSTIC NIPPLE	1
28	48960GT	FITTING,CONN,520120-12***	6

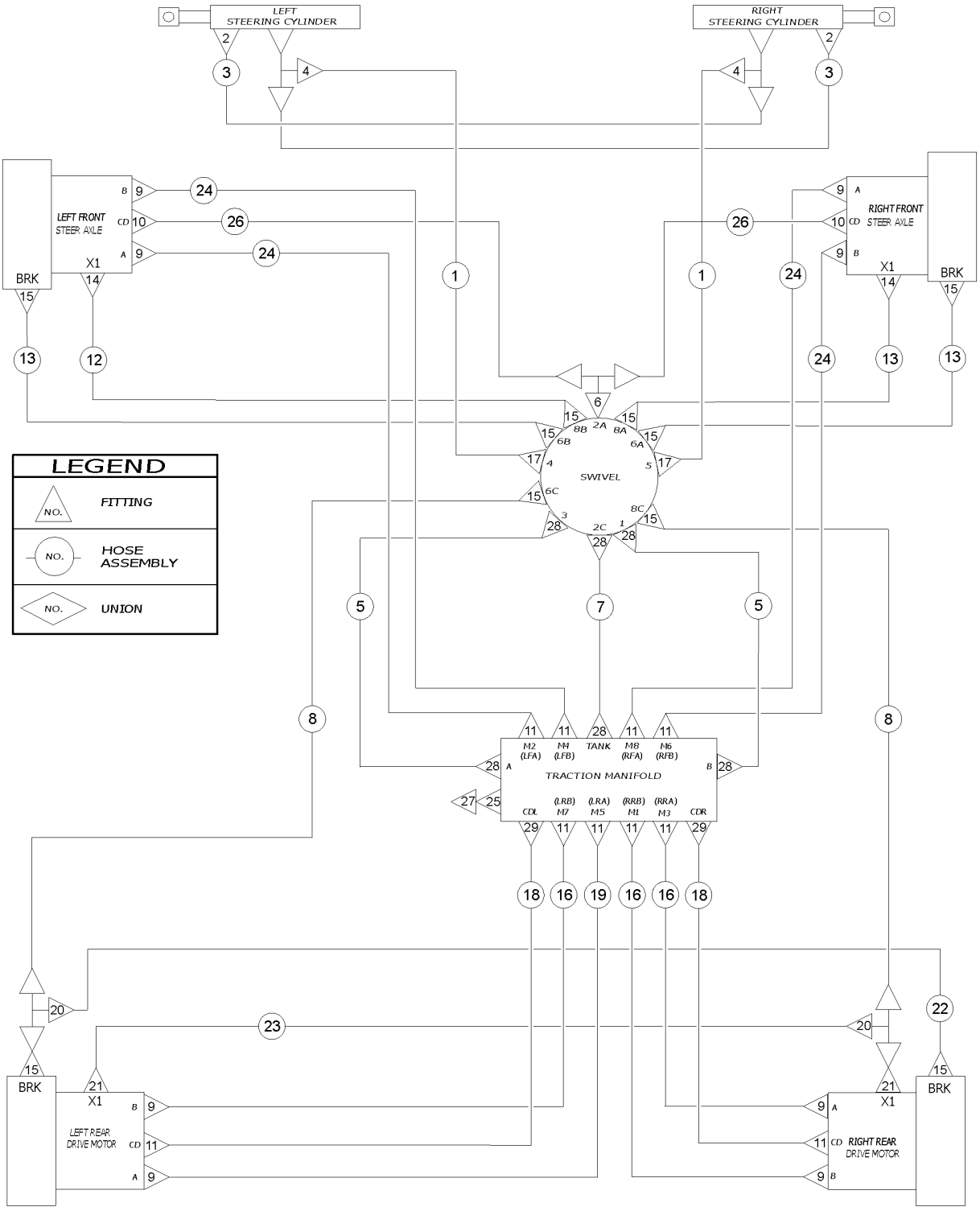
LEFT STEERING CYLINDER
RIGHT STEERING CYLINDER
LEFT FRONT STEER AXLE
RIGHT FRONT STEER AXLE
BRK
X1
SWIVEL
TRACTION MANIFOLD
M2 (LFA)
M4 (LFB)
TANK
M8 (RFA)
M6 (RFB)
M7 (LRB)
M5 (LRA)
M1 (RRB)
M3 (RRA)
CDL
CDR
LEFT REAR DRIVE MOTOR
RIGHT REAR DRIVE MOTOR
LEGEND
NO. FITTING
NO. HOSE ASSEMBLY
NO. UNION

Item	*Part No.*	*Description*	*Qty.*
29	48943GT	FITTING,CONN,520120-8-6	2

805.1 Oscillate System

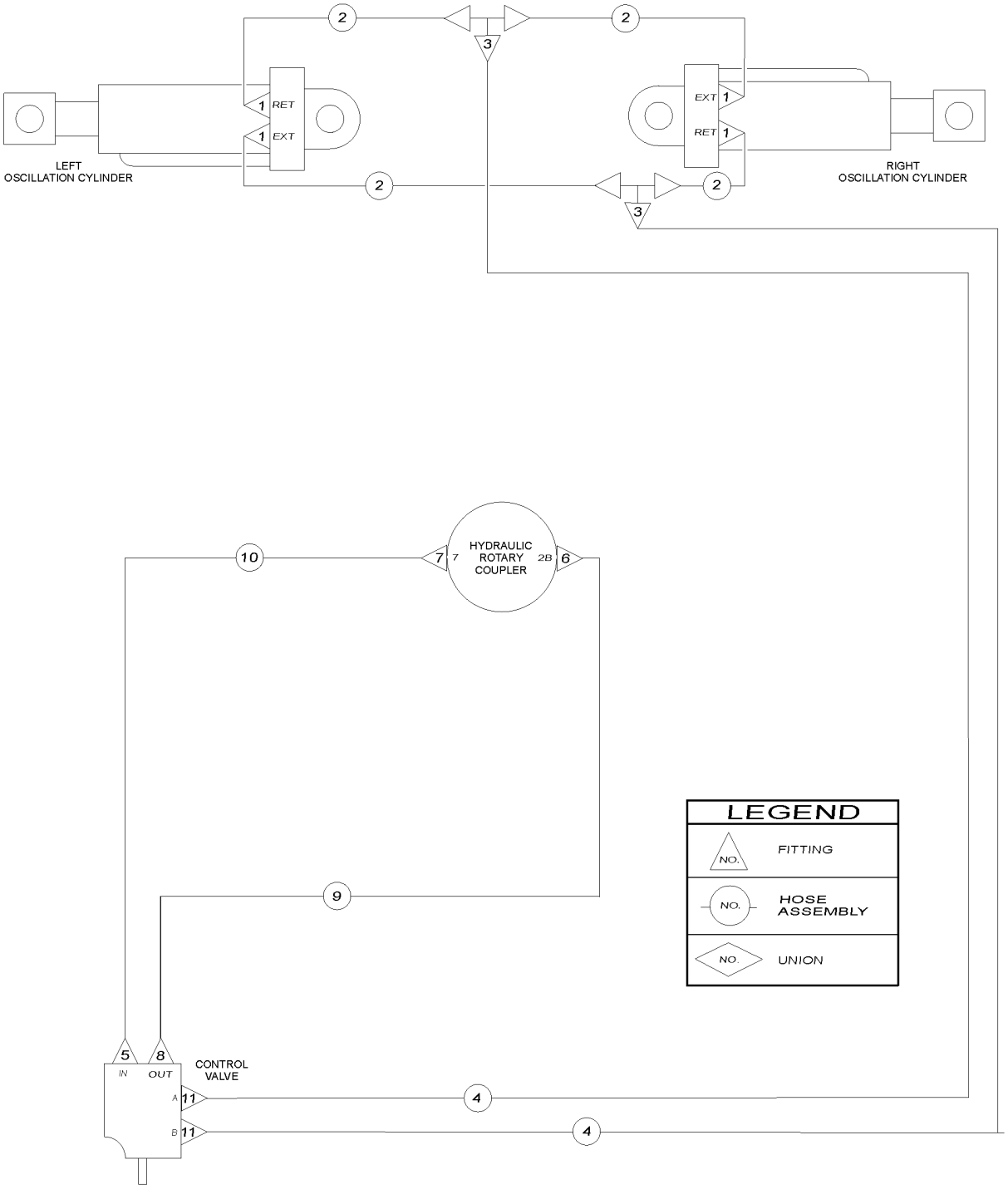

Item	Part No.	Description	Qty.
1	48912GT	CONN,520120-4-6***	4
2	49128-3291GT	HOSE ASSY,-6,STR FEM,90 FEM	4
3	53980GT	TEE,BRANCH,520433-6	2
4	1288890-9948GT	HOSE ASSY,-6,STR FEM,BULKHEAD	2
5	48929GT	FITTING,ELBOW,90D,520220-6-8	1
6	48933GT	CONN,520120-8***	1
7	48916GT	CONN, 520120-6	1
8	48932GT	FITTING,ELBOW,90D,520220-8***	1
9	94465-5566GT	HOSE ASSY,-8,STR FEM,STR FEM	1
10	49130-5591GT	HOSE ASSY,-6,STR FEM,STR FEM	1
11	1287507GT	CONN, 520120-6- 0.067	2

901.1 Drive Lights, Alarm and Beacon Packages

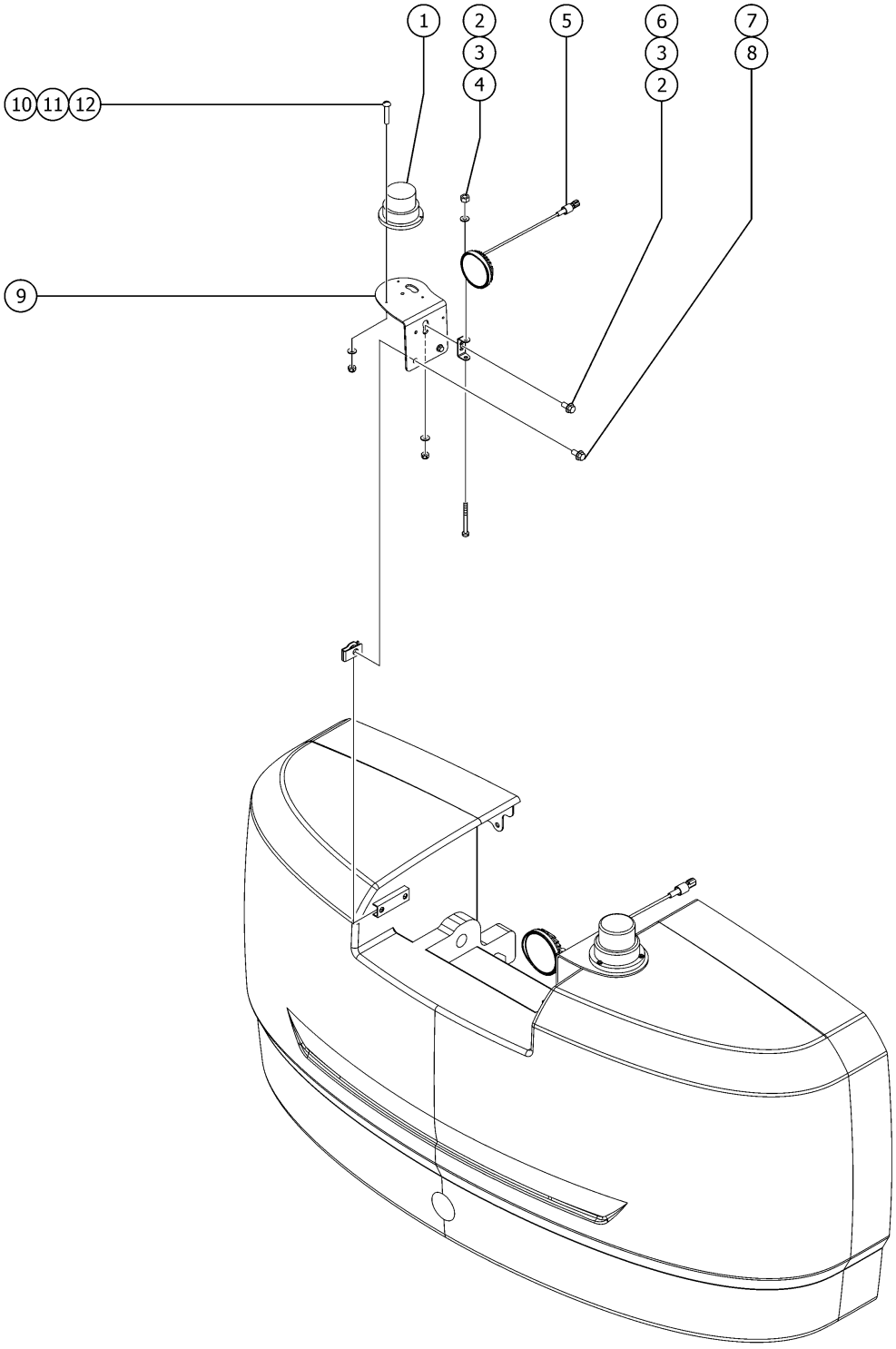

Item	Part No.	Description	Qty.
1	56704GT	STROBE,FIREBOLT,12-80VDC,AMB**	2
1-	121489GT	HARNESS,BEACON,S80/85 2008	
1-	122019GT	FLASHTUBE,U SHAPED,360DEG,BULB	
1-	226393GT	FLASHTUBE,STRAIGHT,360DEG,BULB	
1-	72282GT	LENS,AMBER,STROBE,FIREBOLT	
2	22571GT	NUT,HEX,M8 X 1.25	2
3	49408GT	WASHER, LOCK, M8	4
4	75185GT	SCREW,HHC,M8X1.25X 70MM,GR8.8	2
5	823520GT	ASSY, DRIVE LIGHT, 12V LED items 2, 3, 4 and light bracket included.	2
6	49379GT	SCREW,HHC,M8 X 1.25 X 25	
7	824089GT	SCREW, HHF, 3/8-16 X .75, 8, ZAG	4
8	29868GT	SPRING CLIP,3/8-16,.05-.20X.73,ZAG	4
9		Ref.LIGHT/BEACON BRKT (refer to 307.1)	
10	825352GT	SCREW,PHPM,10-32X1.25,ZAG	6
11	1253185GT	WASHER,FLAT,#10,USS,ZAG	6
12	1283005GT	NUT,NYLOCK FLG,10-32,A,ZAG	6

902.1 Platform Accessories

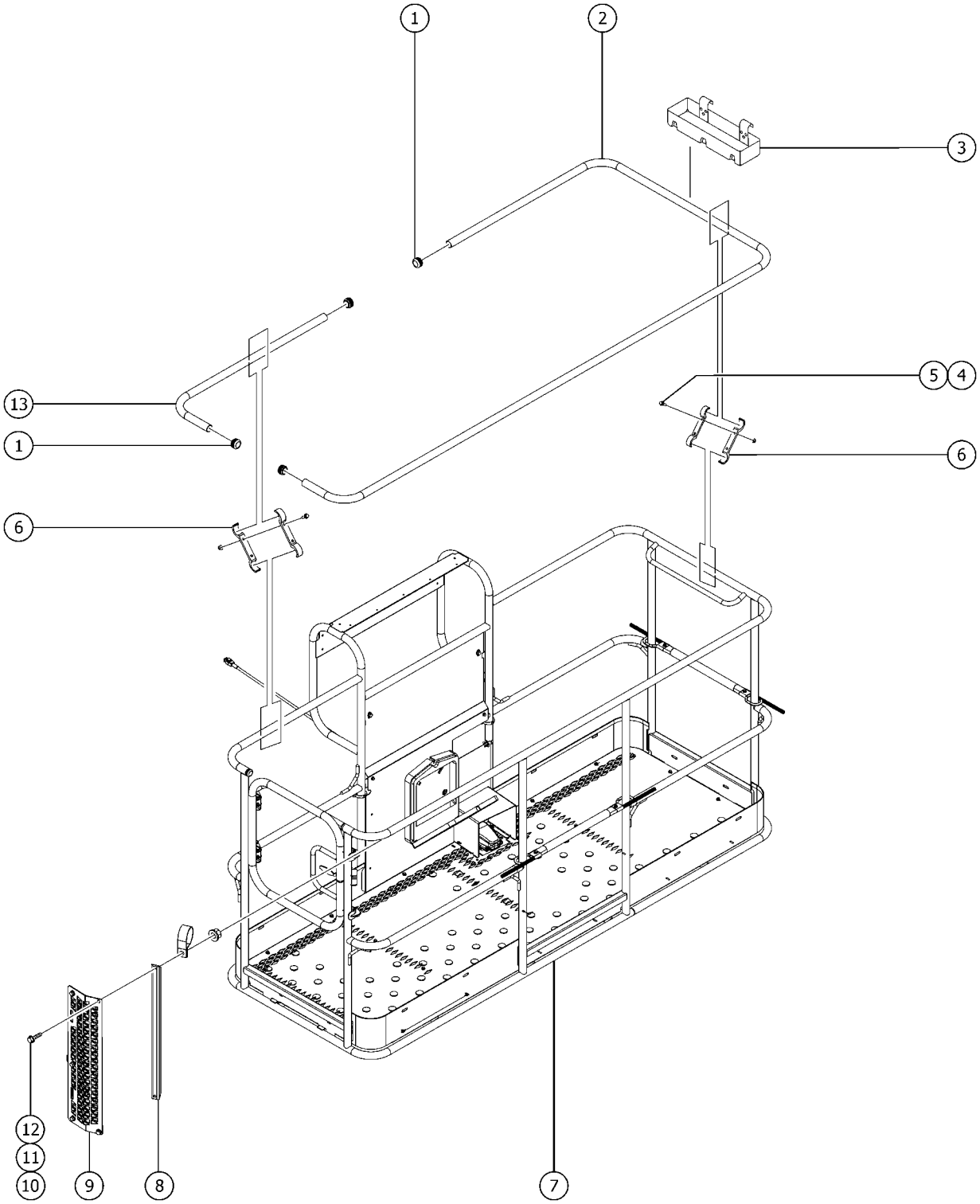

Item	Part No.	Description	Qty.
A	1291495GT	KIT, AUX RAIL, 6' PLAT, SIDE GATE (6 foot Platform)	
B	1291496GT	KIT, AUX RAIL, 8' PLAT, SIDE GATE (8 foot Platform)	
1	55753GT	BUMPER, PLASTIC, 1.25 O.D.	4
2	1271077GT	AUX RAIL, 8' PLAT, TRI-ENTRY (8 foot Platform)	1
2B	1270570GT	AUX RAIL, 6' PLAT, SIDE ENTRY (6 foot Platform)	1
3	9599-SGT	TOOL TRAY ACCESSORY***	1
4	824079GT	SCREW,HHF,1/4-20X1,8,ZAG (8 foot Platform)	26
4B	824079GT	SCREW,HHF,1/4-20X1,8,ZAG (6 foot Platform)	22
5	824027GT	NUT, TL FLG, 1/4-20, G, ZAG (8 foot Platform)	26
5B	824027GT	NUT, TL FLG, 1/4-20, G, ZAG (6 foot Platform)	22
6	122073GT	SUPPORT, RAILING (8 foot Platform)	26
6B	122073GT	SUPPORT, RAILING (6 foot Platform)	22
7		Ref. WELDMENT, PLATFORM (refer to 701.1)	1
8	1277966GT	TUBE,SQUARE, 1" X 1" X .125	1
9	1277952GT	GUARD, SWING GATE	1
10	824086GT	SCREW, HHF, 5/16-18 X 1, 8, ZAG	5
11	56424GT	CLAMP,1.25X.5 RUBBER-CUSHION	5
12	824028GT	NUT,TL FLG,5/16-18,G,ZAG	5
13	1271078GT	AUX RAIL, 8' PLAT, TRI-ENTRY (8 foot Platform)	1
13B	1270571GT	AUX RAIL, 6' PLAT, SIDE ENTRY (6 foot Platform)	1

903.1 Half Mesh with Side Entry

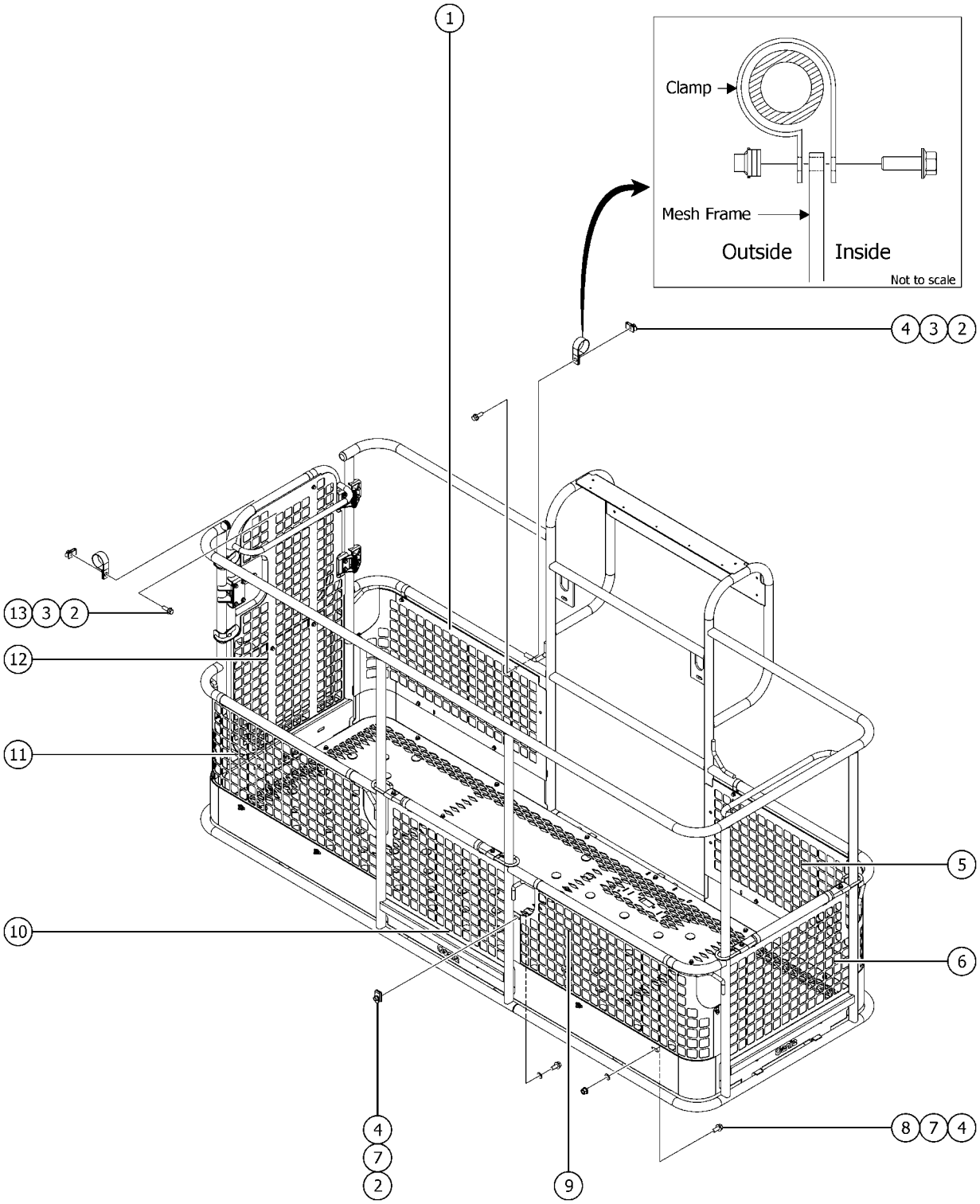

903.1 Half Mesh with Side Entry

Item	Part No.	Description	Qty.
1	1270994GT	PANEL, HALF MESH (8 foot Platform)	1
1B	1270314GT	PANEL, HALF MESH (6 foot Platform)	1
2	56912GT	SPRING CLIP,1/4-20,.025-.15X.54,ZAG	
3	56424GT	CLAMP,1.25X.5 RUBBER-CUSHION	
4	824078GT	SCREW,HHF,1/4-20X.75,8,ZAG	
5	1271019GT	PANEL, HALF MESH (8 foot Platform)	1
6	1271061GT	PANEL, HALF MESH (8 foot Platform)	1
6B	1270313GT	PANEL, HALF MESH (6 foot Platform)	1
7	824113GT	WASHER,FLAT,USS,1/4,ZAG	
8	1277924GT	NUT,NYLOCK FLG,1/4-20,F,ZAG	
9	1271018GT	PANEL, HALF MESH (8 foot Platform)	1
10	1271061GT	PANEL, HALF MESH	1
11	1271040GT	PANEL, HALF MESH (8 foot Platform)	1
11B	1270316GT	PANEL, HALF MESH (6 foot Platform)	1
12	1278793GT	WELDMENT,PLATFORM MESH GATE	1
13	824079GT	SCREW,HHF,1/4-20X1,8,ZAG	

904.1 Panel Cradle and Pipe Cradle

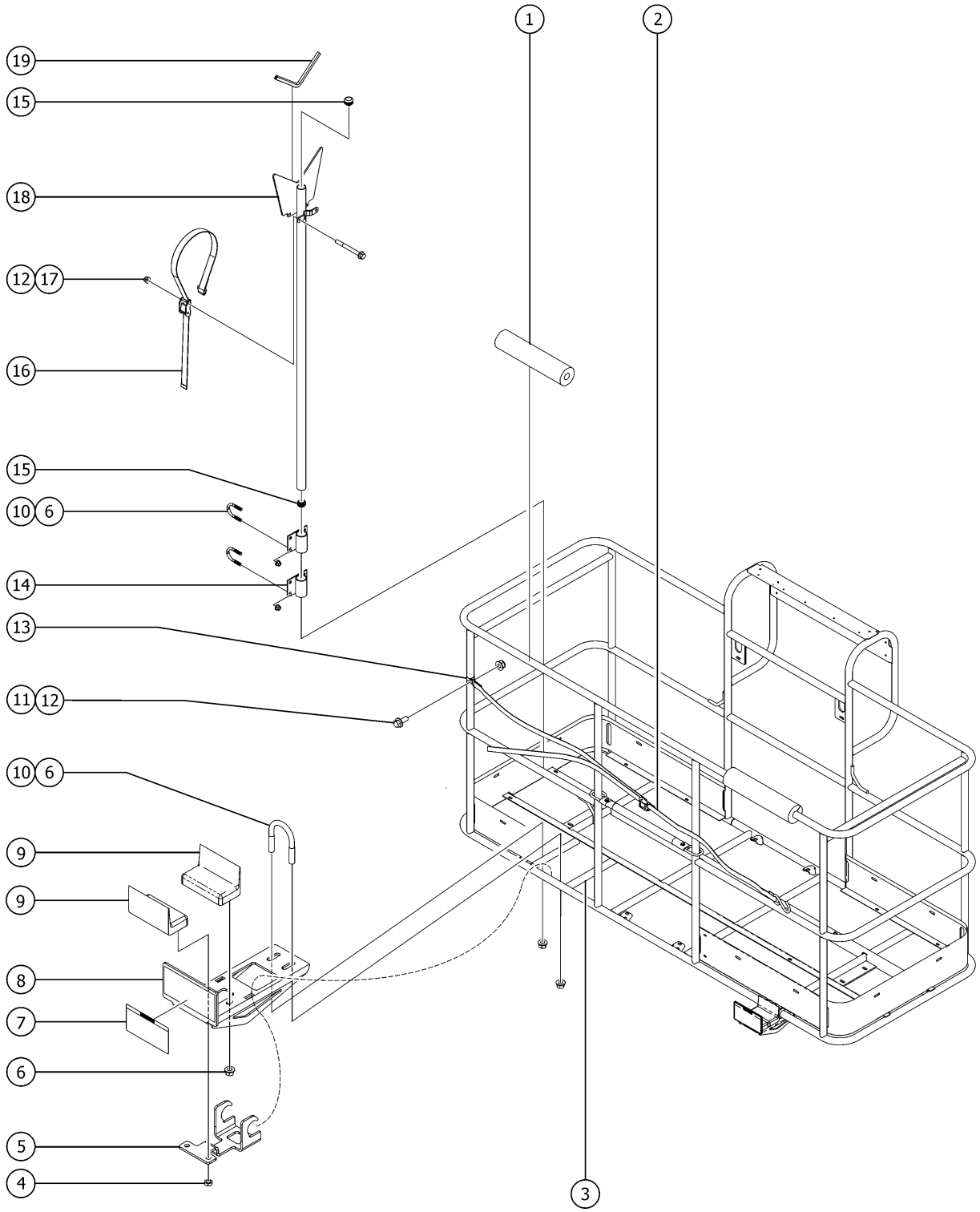

Item	Part No.	Description	Qty.
A	77683GT	ACCESSORY,PANEL CRADLE,ANSI (ANSI/CSA models)	
B	85300GT	PIPE CRADLE ASSY. SERV (ONE)** (This is a single assembly. Qty 2 of 85300GT required to complete a set)	2
B-	65630GT	INSTRUCTIONS-PIPE CRADLE,BOOMS	
C	72875GT	DECAL,WARNING,PIPE CRADLE,BOOM	2
1	88377-1400GT	FOAM PAD***	2
2	77664GT	ADJUSTABLE STRAP ASSY	1
3	73463-1175GT	TUBE, RD, ALUM, 1.25 X .083 X 11.75	2
4	824038GT	NUT, TL JAM, 3/8-16, A, ZAG	4
5	233992GT	KIT,PANEL CRADEL BRACKET,WORD (ANSI models) (includes hook, panel support bracket and installation instructions)	1
5B	228849GT	FORMING,SECONDARY SUPPORT	2
6	1274322GT	NUT,NYLOCK FLG,3/8-16,F,ZAG	
7	82410GT	DECAL,WARNING,PANEL CRADLE (order seperately)	2
8	233992GT	KIT,PANEL CRADEL BRACKET,WORD (ANSI models) (includes hook, panel support bracket and installation instructions)	1
8B	228848GT	FORMING PANEL CRADLE	2
9	56934GT	PAD,REST,1"THICK,FLANGED	4
10	1251600GT	U-BOLT, FLATTENED, 1.5DIA. X 3/8 UNC,ZAG	10
11	1256855	SCREW,HHF,1/4-20X.625,8,ZAG	1
12	1277924GT	NUT,NYLOCK FLG,1/4-20,F,ZAG	
13	56424GT	CLAMP,1.25X.5 RUBBER-CUSHION	1
14	81368GT	WELDMENT,PIPE CRADLE MOUNT	4
15	55753GT	BUMPER, PLASTIC, 1.25 O.D.	4
16	56570GT	STRAP, CONDUIT HOLDER 60"***	2
17	824083GT	SCREW,HHF,1/4-20X2.5,8,ZAG	4
18	56525GT	WELDMENT, PIPE CRADLE	2
19	19018-1100GT	TRIMLOCK,BLACK,5/32"	2

904.2 Panel Cradle Option

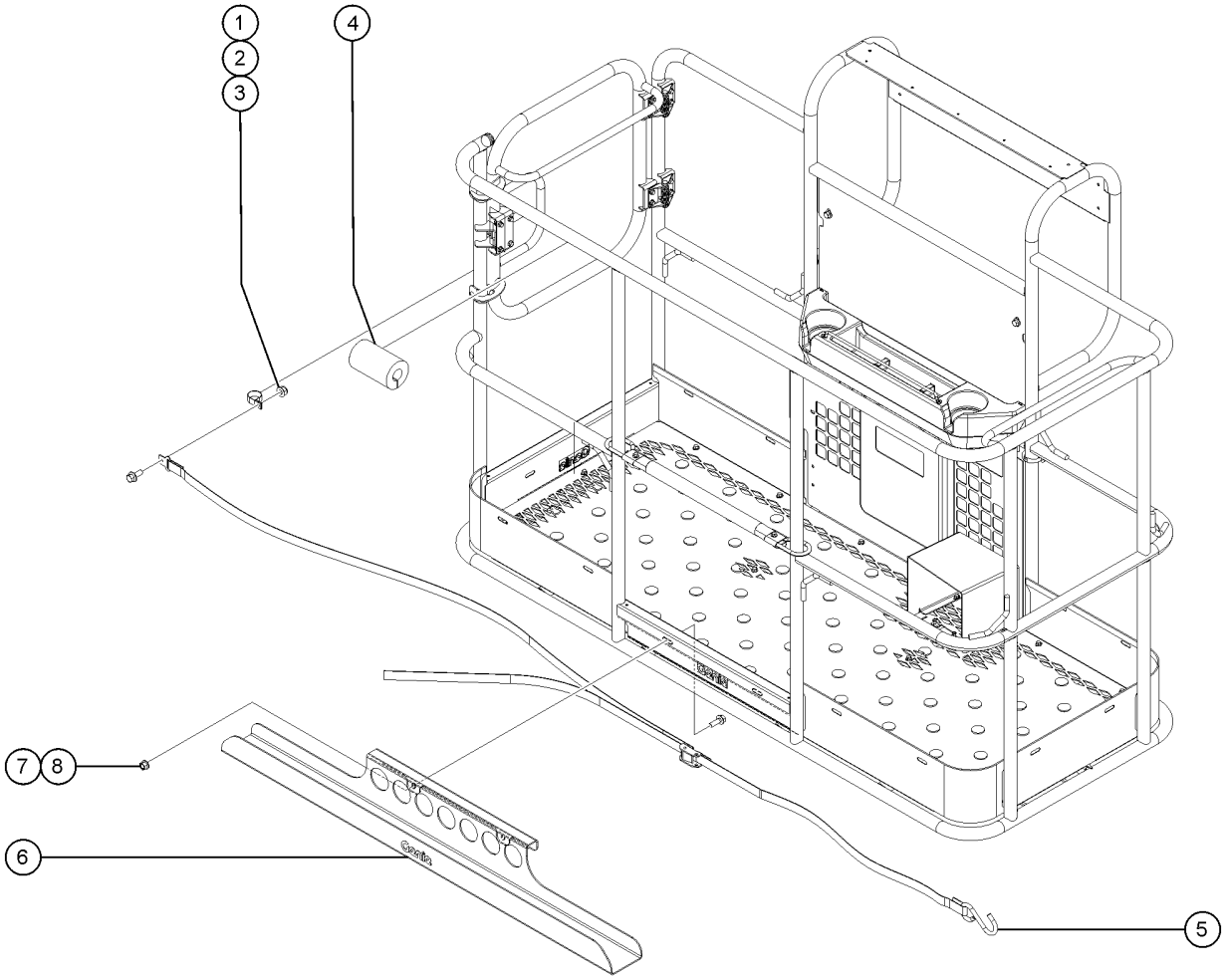

Item	Part No.	Description	Qty.
-	1298841GT	KIT, PANEL CRADLE, ANSI For machines with weld in toeboard only (ANSI)	1
-	1299220GT	KIT, PANEL CRADLE, CE For machines with weld in toeboard only (CE)	1
1	1277924GT	NUT,NYLOCK FLG,1/4-20,F,ZAG	1
2	56424GT	CLAMP,1.25X.5 RUBBER-CUSHION	1
3	1256855	SCREW,HHF,1/4-20X.625,8,ZAG	1
4	1298850GT	FOAM PAD, PANEL CRADLE	2
5	77664GT	ADJUSTABLE STRAP ASSY	1
6	1322810GT	TRAY, PANEL CRADLE W/SYMBOL DECALS	1
7	1274167GT	NUT,NYLOCK FLG,5/16-18,F,ZAG	2
8	824086GT	SCREW, HHF, 5/16-18 X 1, 8, ZAG	2

905.1 Platform Work Lights

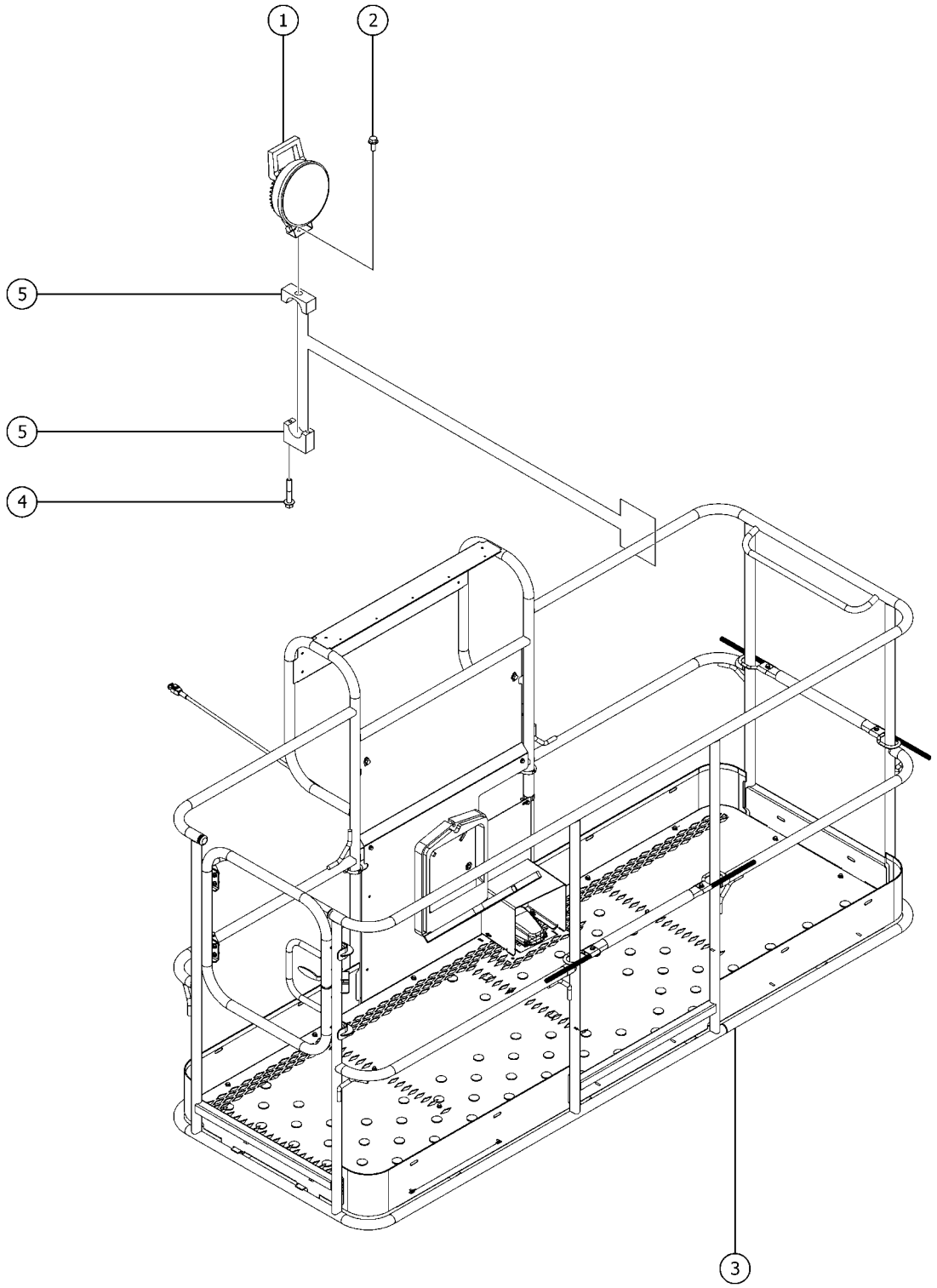

Item	*Part No.*	*Description*	*Qty.*
1	1282993GT	LIGHT, LED WHITE 12V W/SWITCH	2
1-	824149GT	NUT, M8-1.25, DIN934, 10, ZAB	
2	824085GT	SCREW, HHF, 5/16-18 X .75, 8, ZAG	2
3		Ref.WELDMENT, PLATFORM refer to 701.1	
4	824081GT	SCREW, HHF, 1/4-20 X 1.5, 8, ZAG	4
5	35956GT	WORK LIGHT MOUNTING BRACKET	2

906.1 Aircraft Protection Package, Standard Entry

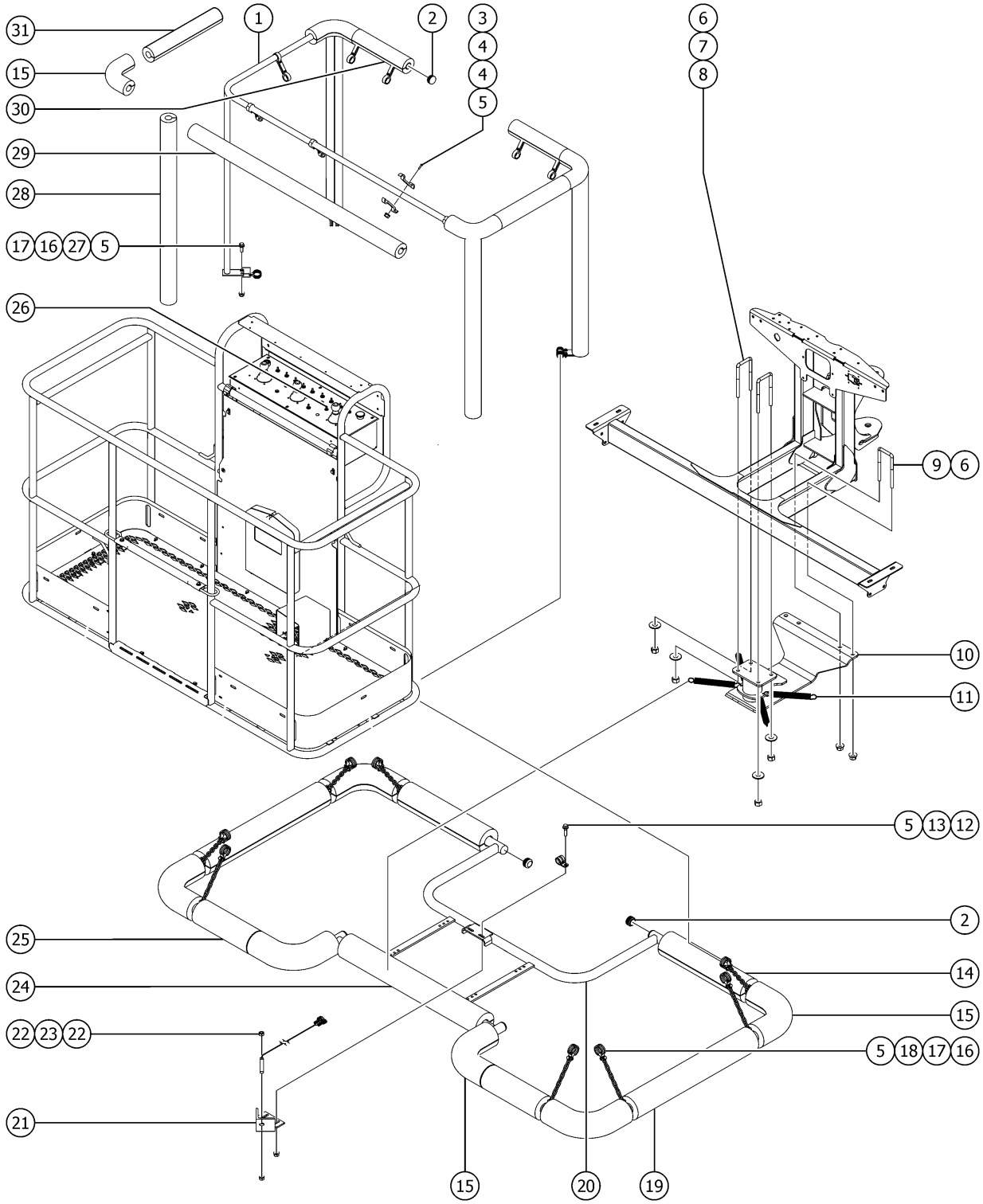

Item	Part No.	Description	Qty.
1	46188GT	WELDMENT, AIRCRAFT TOP BUMPER (Includes item 27)	1
2	55753GT	BUMPER, PLASTIC, 1.25 O.D.	6
3	824079GT	SCREW,HHF,1/4-20X1,8,ZAG	20
4	122073GT	SUPPORT, RAILING	20
5	1277924GT	NUT,NYLOCK FLG,1/4-20,F,ZAG	46
6	66472GT	U-BOLT, SQR, 3/8-16X2X5, PLTD	4
7	1255758GT	WASHER,FLAT,3/8,USS,ZAG	4
8	824038GT	NUT, TL JAM, 3/8-16, A, ZAG	4
9	824029GT	NUT, TL FLG, 3/8-16, G, ZAG	4
10	1274645GT	WELDMENT,SKID PLATE,AIRCRAFT PROT.	1
11	822769GT	SPRING,EXTENSION,1.92LB/IN	4
12	824079GT	SCREW,HHF,1/4-20X1,8,ZAG	2
13	6833GT	CLAMP,0.50,#8 X 1/4,RUB CUSH	1
14	75617-1550GT	PADDING,FOAM 3.5"OD X 1.50"ID	2
15	75636GT	PADDING,FOAM,3.0"X1.50ID 90DEG	10
16	21618GT	CLAMP,1.13,#18 X 1/4,RUB CUSH	24
17	824078GT	SCREW,HHF,1/4-20X.75,8,ZAG	24
18	56426-700GT	CHAIN,NO.2 (11 LINKS)	8
19	75617-2275GT	PADDING,FOAM 3.5"OD X 1.50"ID	2
20	822759GT	WDMT,AIRCRAFT SENSOR BUMPER	1
21	77797GT	WELDMENT, SENSOR MOUNT	1
22	88390GT	NUT,HEX,M8,PLASTIC	2
23	1269721GT	HARNESS, PROX SENSOR,ACP	1
23-	27391GT	PROXIMITY SENSOR***	
23-	29261GT	MAGNET,NEODYMIUM,.375 X .100	
24	822768GT	FOAM,AIRCRAFT PROTECTION	1
25	75617-1025GT	PADDING,FOAM 3.5"OD X 1.50"ID	2
26	128203GT	SWITCH TOGGLE ASSY SPDT 2P MOM	1

906.1 Aircraft Protection Package, Standard Entry

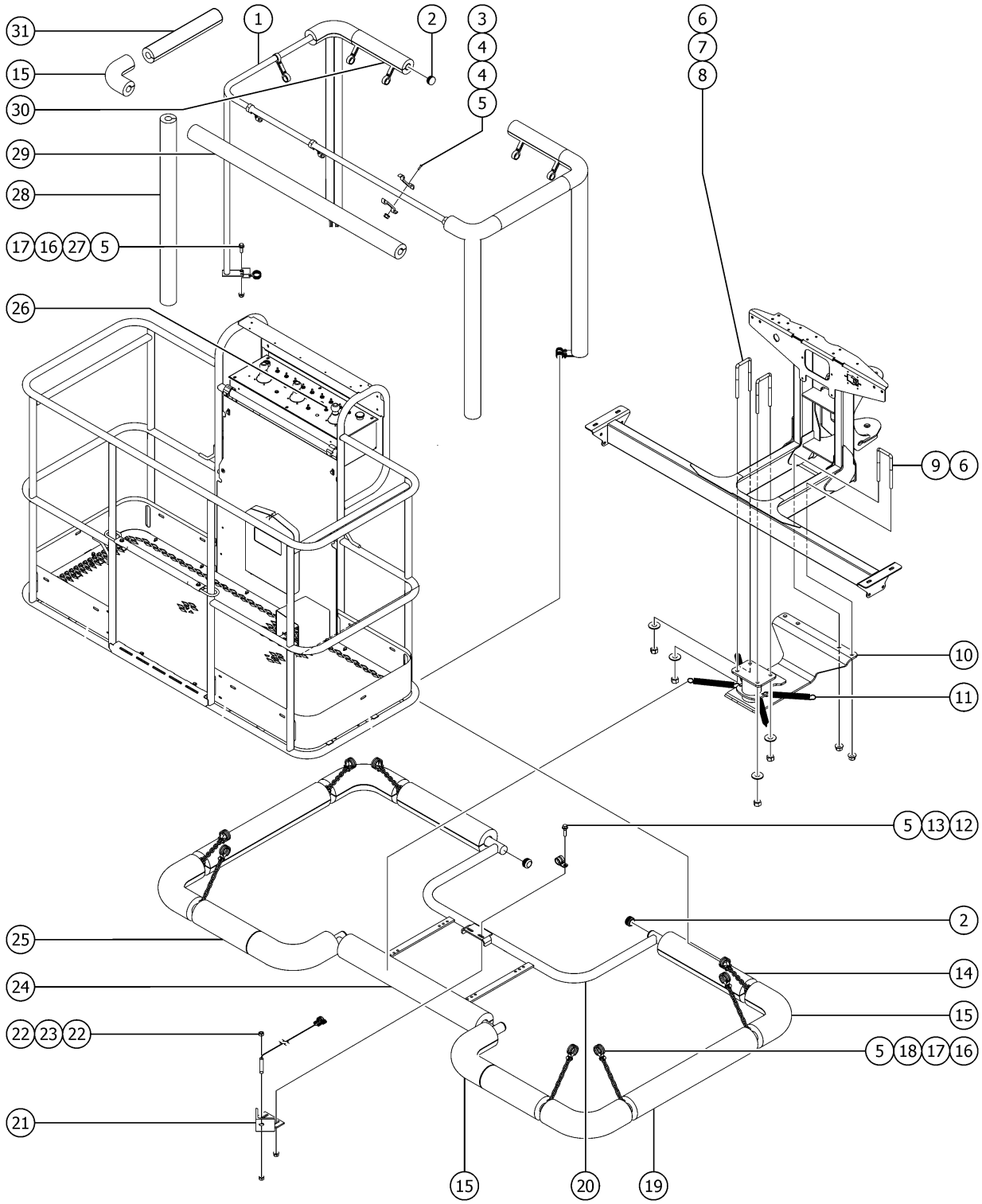

Item	*Part No.*	*Description*	*Qty.*
27	81802GT	PLATE, AIRCRAFT PROTECTION OPT	4
28	1259329GT	PADDING, FOAM, 46.5"	4
29	75617-3138GT	PADDING, FOAM 3.0" OD X 1.50" ID	2
30	1278629GT	PADDING,FOAM, 10.0"	2
31	75617-2075GT	PADDING,FOAM 3.5"OD X 1.50"ID	2

907.1 Aircraft Protection Package, Swing Gate

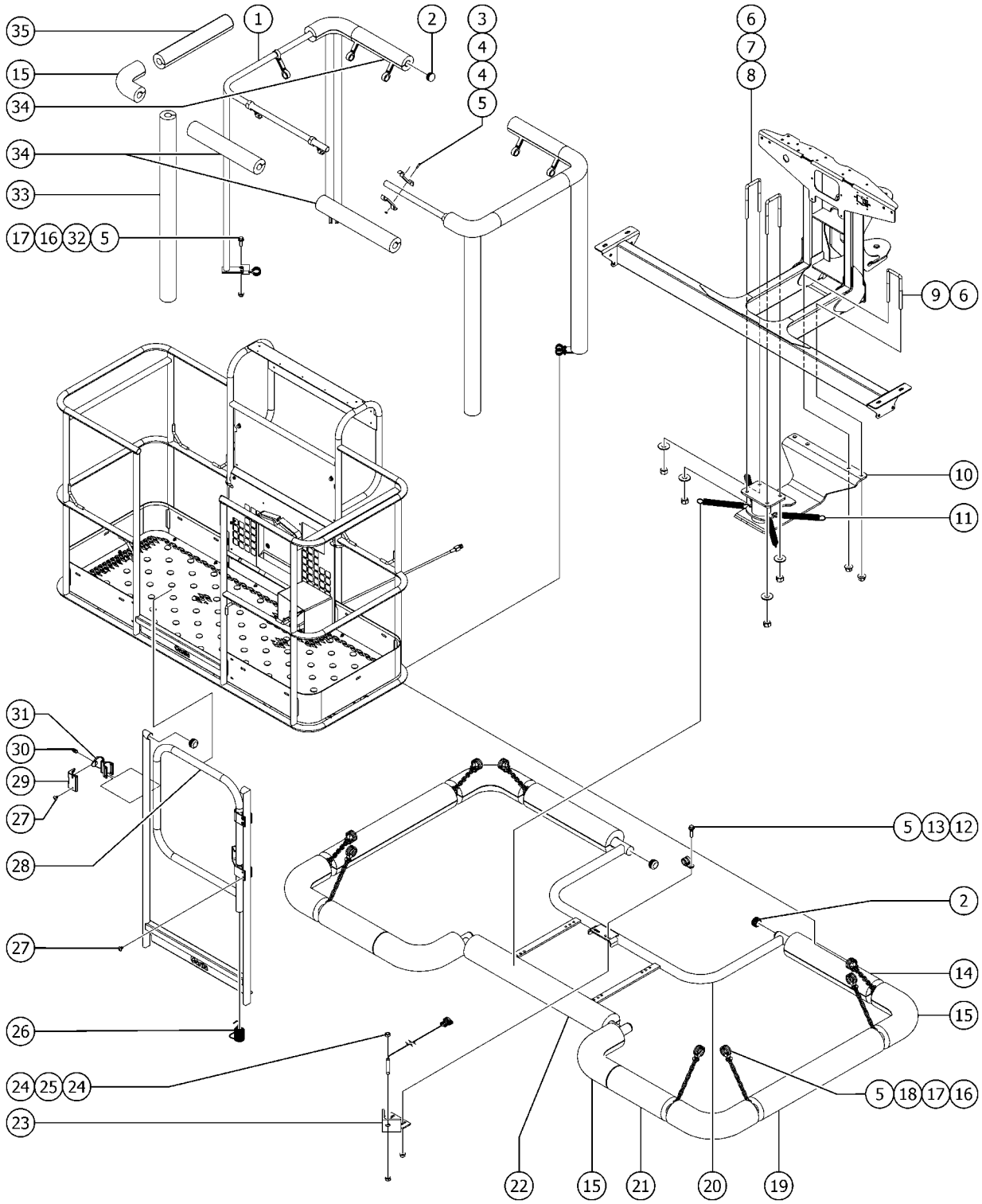

Item	Part No.	Description	Qty.
A	128203GT	SWITCH TOGGLE ASSY SPDT 2P MOM	1
1	822771GT	WDMT,FRAME,AIRCRAFT PROTECTION (Includes item 32)	2
2	55753GT	BUMPER, PLASTIC, 1.25 O.D.	11
3	824227GT	SCREW, BHC, 1/4-20 X 1, ZAG	20
4	122073GT	SUPPORT, RAILING	20
5	824027GT	NUT, TL FLG, 1/4-20, G, ZAG	46
6	66472GT	U-BOLT, SQR, 3/8-16X2X5, PLTD	4
7	1255758GT	WASHER,FLAT,3/8,USS,ZAG	4
8	824038GT	NUT, TL JAM, 3/8-16, A, ZAG	4
9	824029GT	NUT, TL FLG, 3/8-16, G, ZAG	4
10	1274645GT	WELDMENT,SKID PLATE,AIRCRAFT PROT.	1
11	822769GT	SPRING,EXTENSION,1.92LB/IN	4
12	824079GT	SCREW,HHF,1/4-20X1,8,ZAG	2
13	6833GT	CLAMP,0.50,#8 X 1/4,RUB CUSH	1
14	75617-1550GT	PADDING,FOAM 3.5"OD X 1.50"ID	2
15	75636GT	PADDING,FOAM,3.0"X1.50ID 90DEG	10
16	21618GT	CLAMP,1.13,#18 X 1/4,RUB CUSH	24
17	824078GT	SCREW,HHF,1/4-20X.75,8,ZAG	24
18	56426-700GT	CHAIN,NO.2 (11 LINKS)	8
19	75617-2275GT	PADDING,FOAM 3.5"OD X 1.50"ID	2
20	822759GT	WDMT,AIRCRAFT SENSOR BUMPER	1
21	75617-1025GT	PADDING,FOAM 3.5"OD X 1.50"ID	2
22	822768GT	FOAM,AIRCRAFT PROTECTION	1
23	77797GT	WELDMENT, SENSOR MOUNT	1
24	88390GT	NUT,HEX,M8,PLASTIC	2
25	1269721GT	HARNESS, PROX SENSOR,ACP	1
25-	27391GT	PROXIMITY SENSOR***	
25-	29261GT	MAGNET,NEODYMIUM,.375 X .100	

907.1 Aircraft Protection Package, Swing Gate

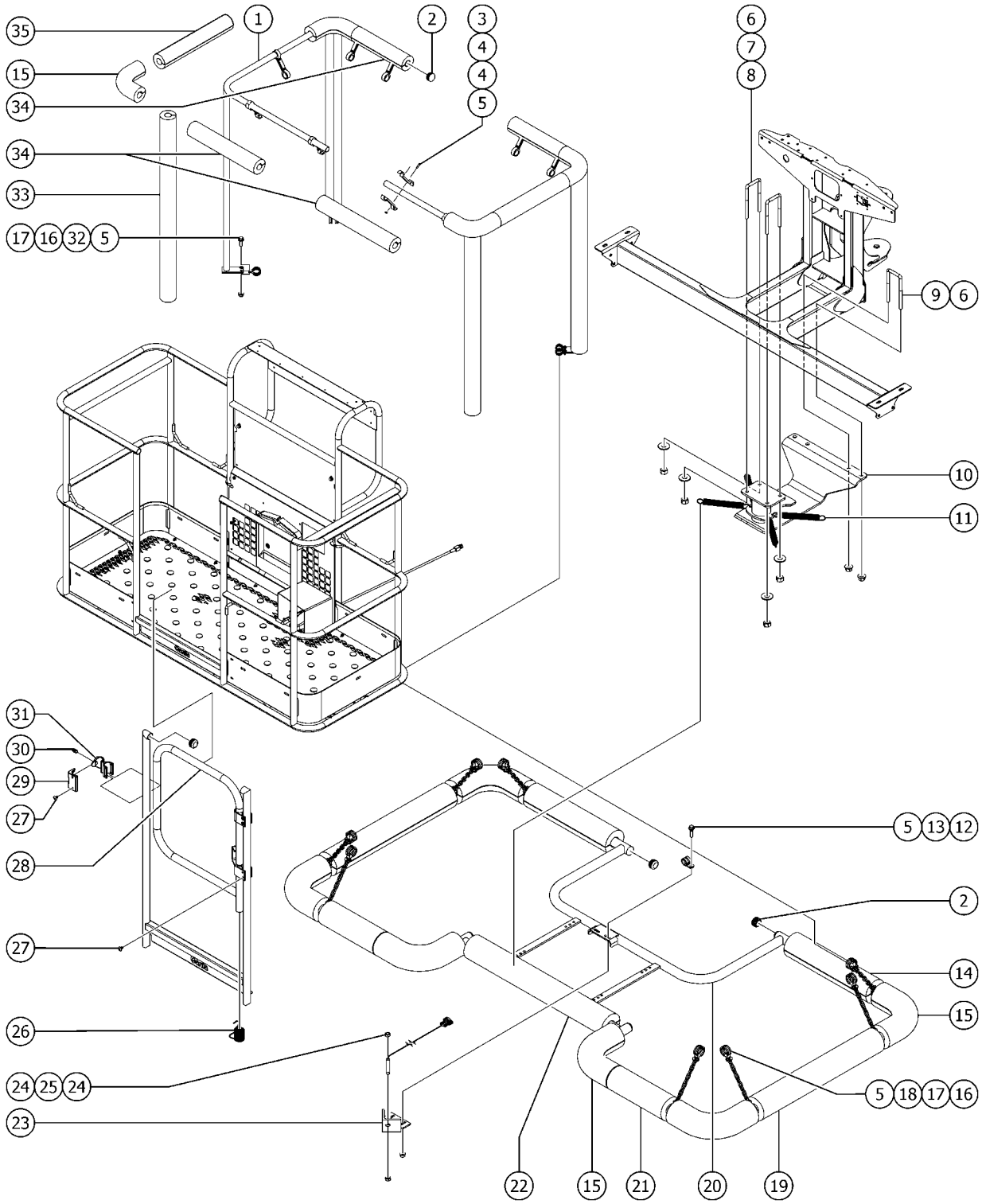

Item	Part No.	Description	Qty.
26	42104GT	SPRING,SHORT PLATFORM GATE	1
27	824207GT	RIVET, STL, STL, DOME, 1/4 X .375, ZAG	8
28	1283880GT	WELDMENT,ALUM HALF GATE	1
28-	43392GT	BUMPER,BATTERY BOX & RAILS	
29	1488GT	RAILING CATCH CASTING--DRILLED	1
30	33674GT	PIN,LOCK,SHORT***	1
31	1487GT	GATE LATCH CASTING--DRILLED	1
32	81802GT	PLATE, AIRCRAFT PROTECTION OPT	4
33	1259329GT	PADDING, FOAM, 46.5"	4
34	1278629GT	PADDING,FOAM, 10.0"	4
35	75617-2075GT	PADDING,FOAM 3.5"OD X 1.50"ID	2

908.1 Air Line and Power to Platform

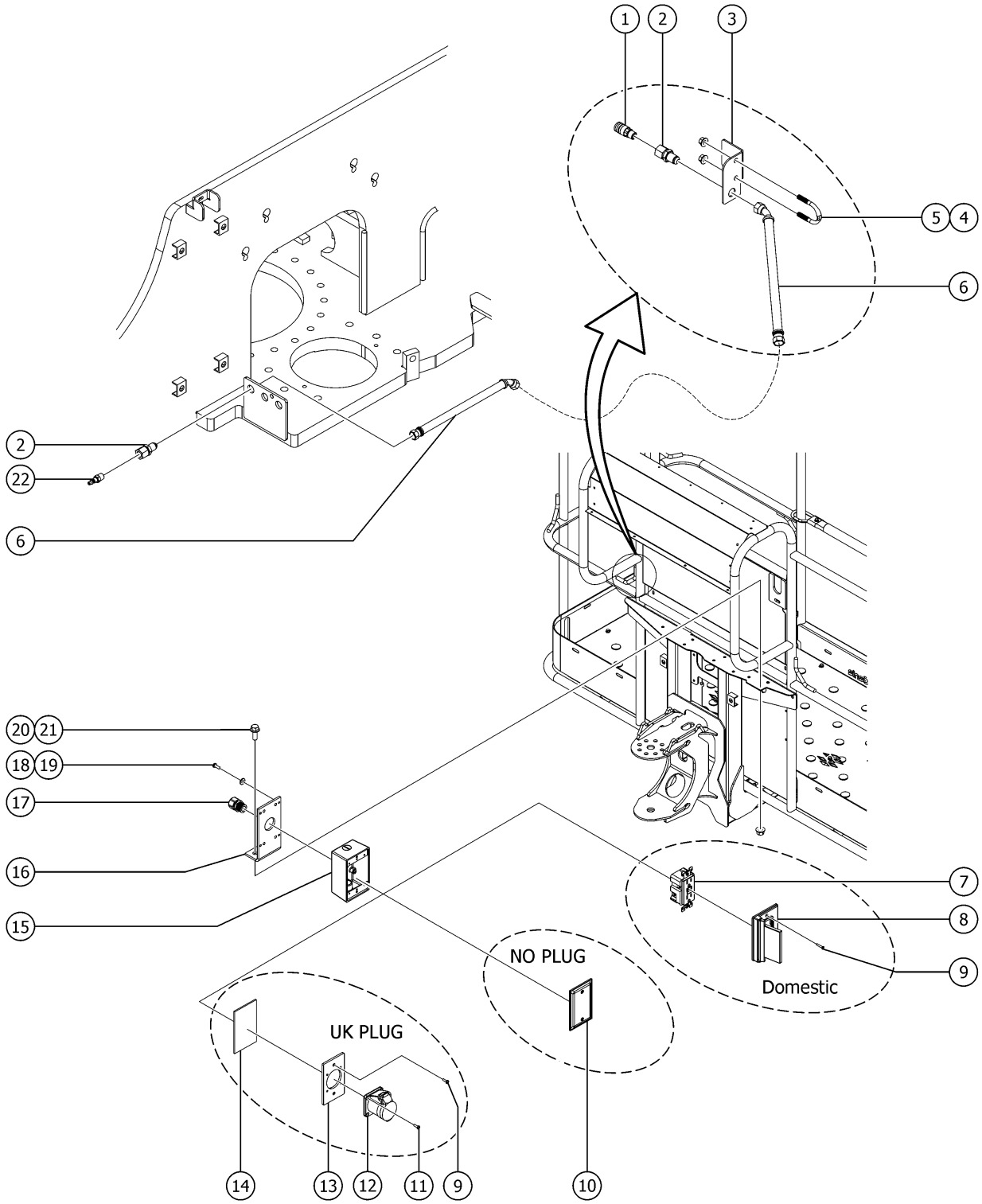

Item	Part No.	Description	Qty.
1	49215GT	MPT,CPLR,1/4"SER,3/8"X18	1
2	49212GT	FEMALE BULKHEAD CONNECTOR-8	2
3	1275087GT	FORMING, AIR TO PLAT	1
4	1251600GT	U-BOLT, FLATTENED, 1.5DIA. X 3/8 UNC,ZAG	1
5	824029GT	NUT, TL FLG, 3/8-16, G, ZAG	2
6	1283562GT	AIRLINE ASSY, S-65 XC S-65 XC	1
6B	1288367GT	AIRLINE ASSY, S-60 XC S-60 XC	1
7	13585GT	OUTLET, 110V	1
8	74006GT	COVER,GFCI,HORIZONTAL,WEATHER	1
9	1253489GT	SCREW,FHPM,6-32 X .75,ZAG	2
10	10777GT	COVER,BLANK	1
11	1255788GT	SCREW,FHPM,8-32X.375,ZAG	4
12	T112560GT	RECEPTACLE,UK,110V	1
13	T112561GT	PLATE,UK,POWER TO PLAT	1
14	74052GT	GASKET,COVER,GFCI,WEATHERPROOF	1
15	75069GT	T-BOX 2.75 X 4.5 X 2.5 to SN S65XCH-47139	1
15B	1310379GT	T-BOX 2.75 X 4.5 X 2.5 from SN S65XCH-47140	1
16	81096GT	BRACKET,POWER TO PLAT, DOM to SN S65XCH-47139	1
16B	1311043GT	BRACKET,POWER TO PLAT, DOM from SN S65XCH-47140	1
17	7057GT	CONN. SQZ,1/2NPT .39-.56 MED.	1
18	1257296GT	SCREW,PHPM-ST,8.32X.50,TYPE F	4
19	1257390GT	WASHER,FLAT,#8,SAE,ZAG	4
20	824090GT	SCREW,HHF,3/8-16X1,8,ZAG	2
21	1274322GT	NUT,NYLOCK FLG,3/8-16,F,ZAG	2
22	49214GT	MALE PIPE THD,1/4" SER,3/8"X18	1

909.1 Hostile Environment, Boom Wipers

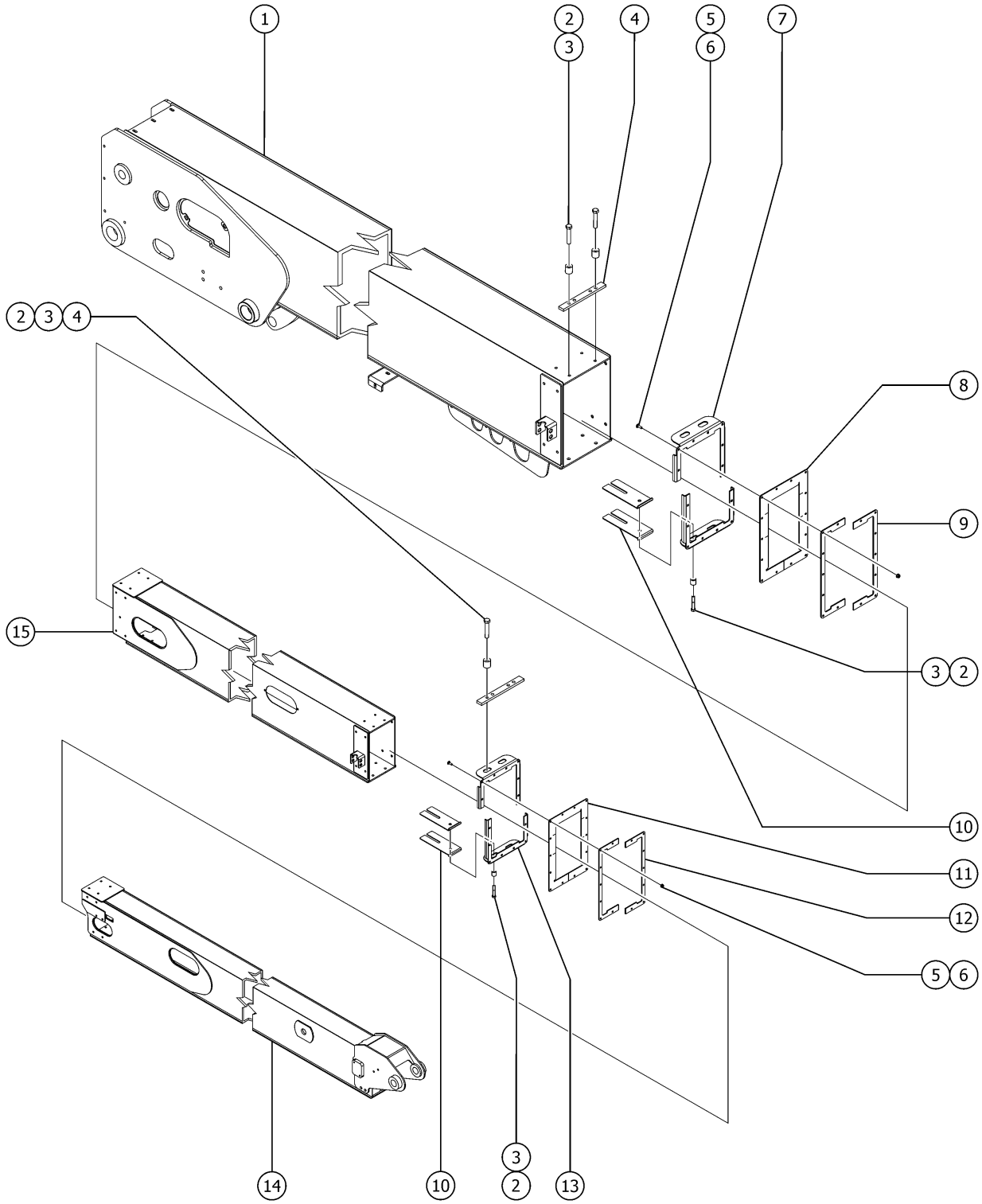

Item	Part No.	Description	Qty.
1		Ref. BOOM TUBE 1 (Refer to 603.1)	
2	1252978GT	SCREW,HHC,3/8-16X2.25,8,ZAG to S65XCH-45620	8
2-	1253478GT	SCREW,HHF,3/8-16X2,8,ZAG from S65XCH-45621	8
3	101932GT	TUBE, RD., STL., DOM .75 X .437 X .78	8
4	1287510GT	SPACER, BOOM WIPER TOP	2
5	824124GT	BOLT, CARRIAGE, 1/4-20 X .75, 5, ZAG	28
6	1277924GT	NUT,NYLOCK FLG,1/4-20,F,ZAG	28
7	1287509GT	FORMING, BRKT, WIPER 1 TO 2	2
8	119086GT	WIPER RUBBER, 1 TO 2	1
9	119085GT	PLATE BACKING, WIPER 1 TO 2	2
10	1287511GT	SHIM,WEAR PAD,7X3,12GA	8
11	119089GT	WIPER RUBBER, 2 TO 3	1
12	119088GT	PLATE BACKING, WIPER 2 TO 3	2
13	1287508GT	FORMING, BRKT, WIPER 2 TO 3	2
14		Ref. BOOM TUBE 3 (Refer to 603.1)	
15		Ref. BOOM TUBE 2 (Refer to 603.1)	

910.1 Hostile Environment, Turntable Components

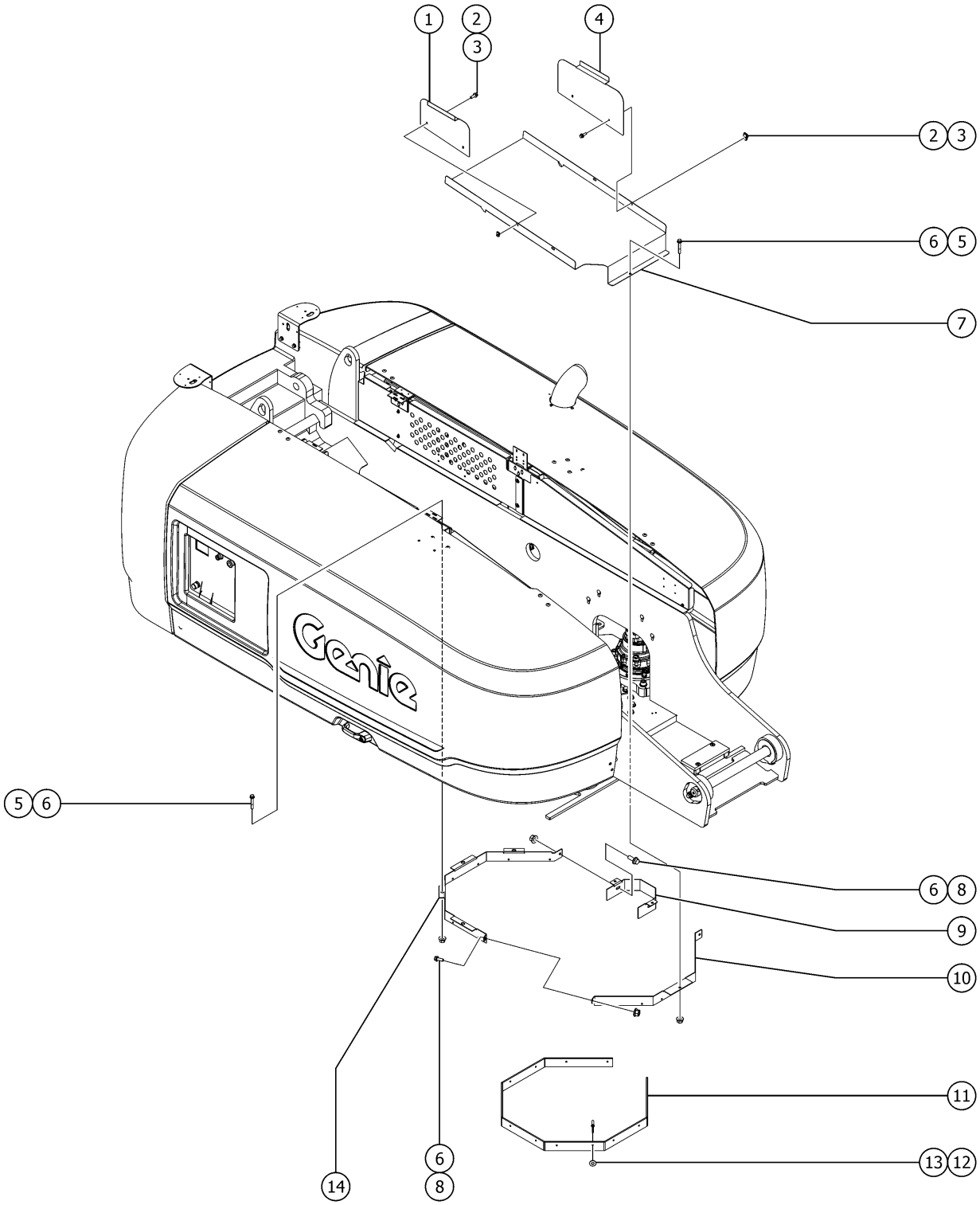

Item	Part No.	Description	Qty.
1	77997GT	FORMING,TT LH SIDE COVER	1
1-	1296971GT	FORMING, TT LH SIDE COVER	
2	824078GT	SCREW,HHF,1/4-20X.75,8,ZAG	4
3	56912GT	SPRING CLIP,1/4-20,.025-.15X.54,ZAG	4
4	77998GT	FORMING,TT RH SIDE COVER	1
5	1256856GT	SCREW,HHF,3/8-16X2.5,8,ZAG	4
6	824029GT	NUT, TL FLG, 3/8-16, G, ZAG	7
7	77996GT	FORMING,TURNTABLE CENTER COVER	1
8	824090GT	SCREW,HHF,3/8-16X1,8,ZAG	3
9		REF. FORMING,PINION GUARD (refer to 307.1)	1
10	70318GT	FORMING, SLEW RING COVER	1
11	70319GT	WIPER,RING GEAR GUARD	1
12	824113GT	WASHER,FLAT,USS,1/4,ZAG	14
13	81167GT	RIVET,ALUM,P,.25X.625	14
14	70317GT	FORMING, WIPER GUARD LT	1

911.1 Hostile Environment, Cylinder Bellows and Cable Track

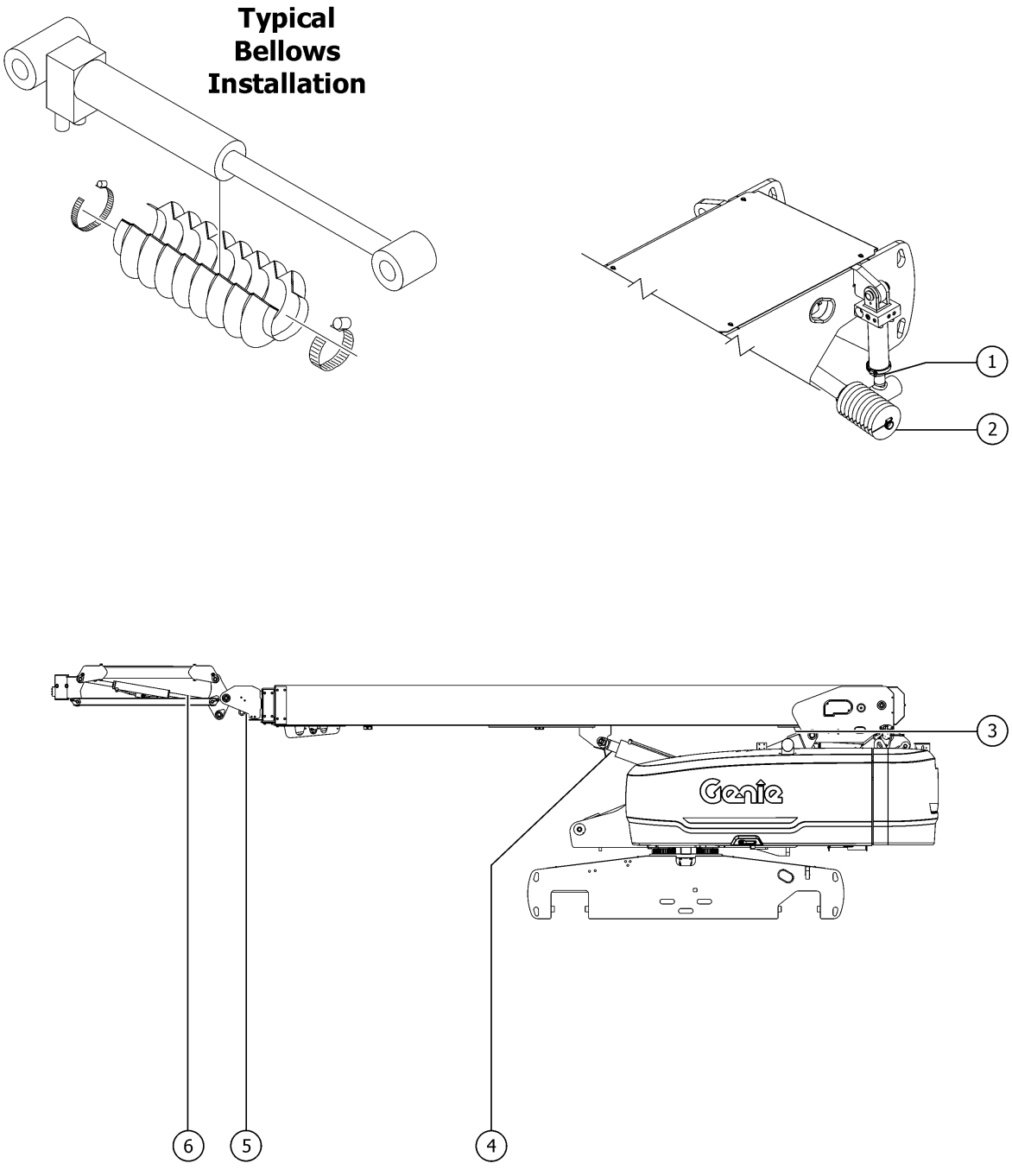

Item	*Part No.*	*Description*	*Qty.*
A	106099GT	COVER,CABLE TRACK	1
1	63727GT	COVER, PROTECTIVE, OSCILLATE	2
1-	22672GT	CLAMP,HOSE,1.75	
1-	34955GT	CLAMP, HOSE, 5.00	
2	34922GT	COVER,PROTECTIVE,STEERING	2
2-	22672GT	CLAMP,HOSE,1.75	
2-	34955GT	CLAMP, HOSE, 5.00	
3	1279800GT	BELLOWS, MASTER CYLINDER	1
3-	34955GT	CLAMP, HOSE, 5.00	
4	1287490GT	BELLOWS, CYLINDER LIFT	1
4-	1288402GT	CLAMP, HOSE, 8,00"	
4-	34955GT	CLAMP, HOSE, 5.00	
5	1291159GT	BELLOWS, PLATFORM LEVEL CYLINDER	
5-	30971GT	CLAMP,HOSE,3.00"	
5-	1280080GT	PLATE, BACKING BELLOWS, S-80/85 XC	
5-	1251757GT	SCREW,PHPM,10-32X.50,ZAG	
5-	1256312GT	WASHER,LOCK,#10,ZAG	
5-	23405GT	NUTSERT,10-32 STEEL CAD PLTD	
6	1279801GT	BELLOWS, JIB CYLINDER	1
6-	35434GT	CLAMP,HOSE,2.00***	
6-	34955GT	CLAMP, HOSE, 5.00	

912.1 Hostile Environment, Ground and Platform Box Covers

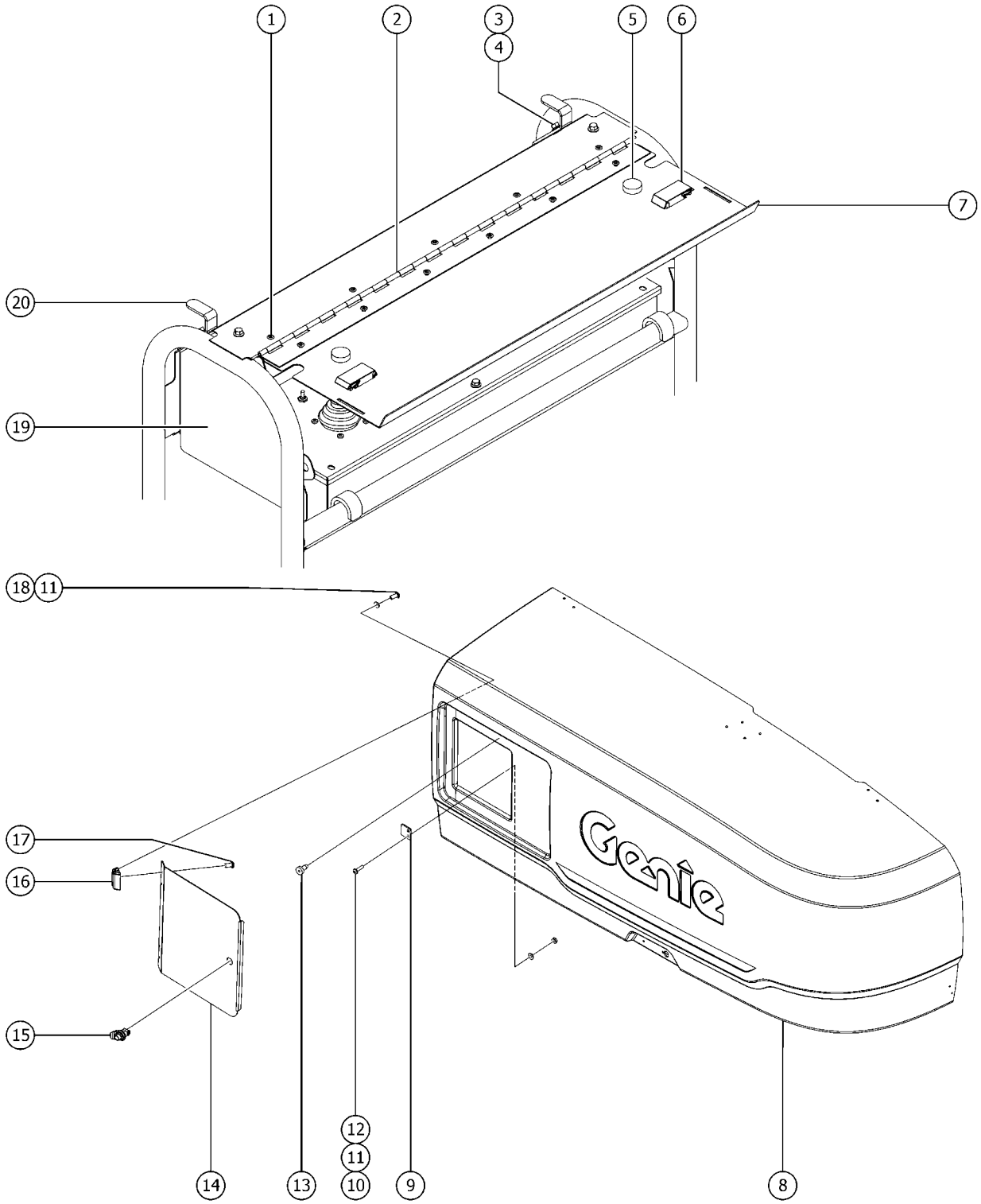

Item	Part No.	Description	Qty.
1	54486GT	RIVET,ALUM,ALUM,3/16BUTTONHEAD	11
2	111526GT	HINGE,PLAT CONTROL BOX COVER	1
3	824078GT	SCREW,HHF,1/4-20X.75,8,ZAG	8
4	1277924GT	NUT,NYLOCK FLG,1/4-20,F,ZAG	8
5	43392GT	BUMPER,BATTERY BOX & RAILS	2
6	30468GT	LATCH,SLIDE, FLUSH MOUNT STYLE	2
7	102785GT	CONTROL BOX COVER,LID	1
8		REF. COVER, TANK-SIDE, S60/65XC refer to 308.1	
9	1261001GT	STRIKER, LATCH	1
10	824215GT	SCREW, PHPM, 10-32 X .75, ZAG	2
11	1253185GT	WASHER,FLAT,#10,USS,ZAG	6
12	1256804GT	NUT,10-32,ZAG	2
13	34619GT	BUMPER,RUBBER***	2
14	1284272GT	FORMING,CONTROL BOX COVER,ALC600	1
15	1259583GT	LATCH, PUSH BUTTON	1
16	1259584GT	HINGE, CONSTANT TORQUE	2
17	825349GT	SCREW,PHPM,10-32X.38,ZAG	4
18	1257227GT	SCREW,PHPM,10-32X.625,ZAG	4
19	88607GT	COVER,CONTROL BOX LEFT SIDE***	1
19B	88606GT	COVER,CONTROL BOX RIGHT SIDE**	1
20	102786PGT	FORMING,LATCH,CTRL BOX LID PTD	2

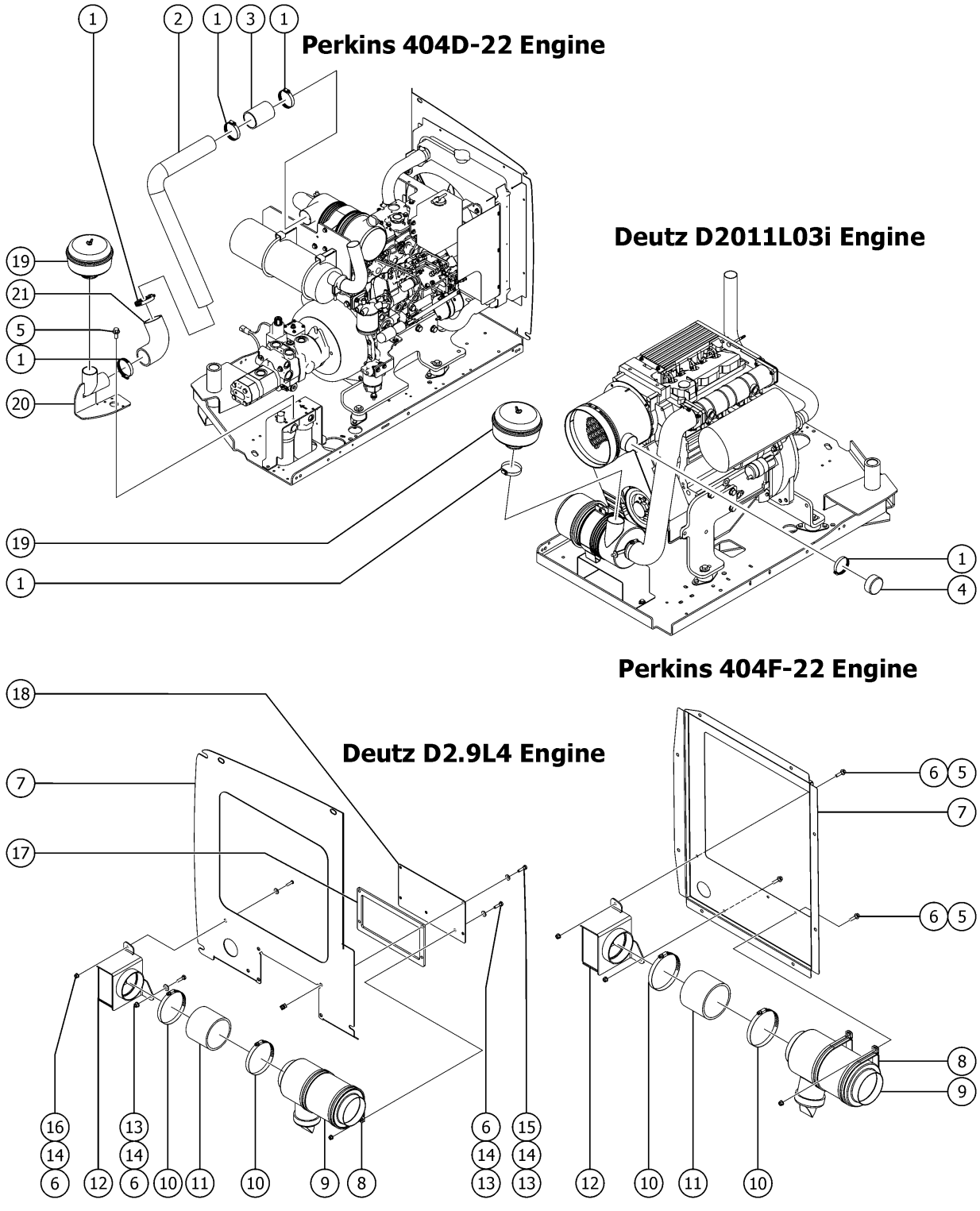
Perkins 404D-22 Engine
Deutz D2011L03i Engine
Perkins 404F-22 Engine
Deutz D2.9L4 Engine

Item	Part No.	Description	Qty.
1	45435GT	CLAMP,HOSE,2.50"	
2	77891GT	TUBE,AIR INTAKE	1
3	34162-0400GT	HOSE,AIR INTAKE 2.5" I.D.	1
4	70529GT	CAP,PLASTIC,2.5 ID	1
5	824079GT	SCREW,HHF,1/4-20X1,8,ZAG	4
6	824027GT	NUT, TL FLG, 1/4-20, G, ZAG	4
7		Ref: Shroud refer to section 500	
8	101639GT	CLAMP,5.38,#86 X 3/8,RUB CUSH	2
9	88493GT	PRECLEANER,AIR INTAKE	1
10	34955GT	CLAMP, HOSE, 5.00	2
11	822871GT	HOSE,STRAIGHT,4" ID X 3.6" LG	1
12	822817GT	WELDMENT,PRECLEANER BOX	1
13	824060GT	SCREW, HHC, 1/4-20 X 1, 8, ZAG	7
14	824113GT	WASHER,FLAT,USS,1/4,ZAG	8
15	56912GT	SPRING CLIP,1/4-20,.025-.15X.54,ZAG	4
16	824227GT	SCREW, BHC, 1/4-20 X 1, ZAG	1
17	1262846GT	SPACER, PRE-CLEANER, TD2.9	1
18	1266159GT	PLATE, PRE-CLEANER, TD2.9	1
19	34959GT	PRECLEANER,AIR INTAKE***	1
20	1262359GT	WELDMENT, PRE-CLEANER, BRACKET	1
21	34164GT	ELBOW,90 DEGR,RUBBER,2.5"I.D.*	1

914.1 Welder Option, Chassis Components

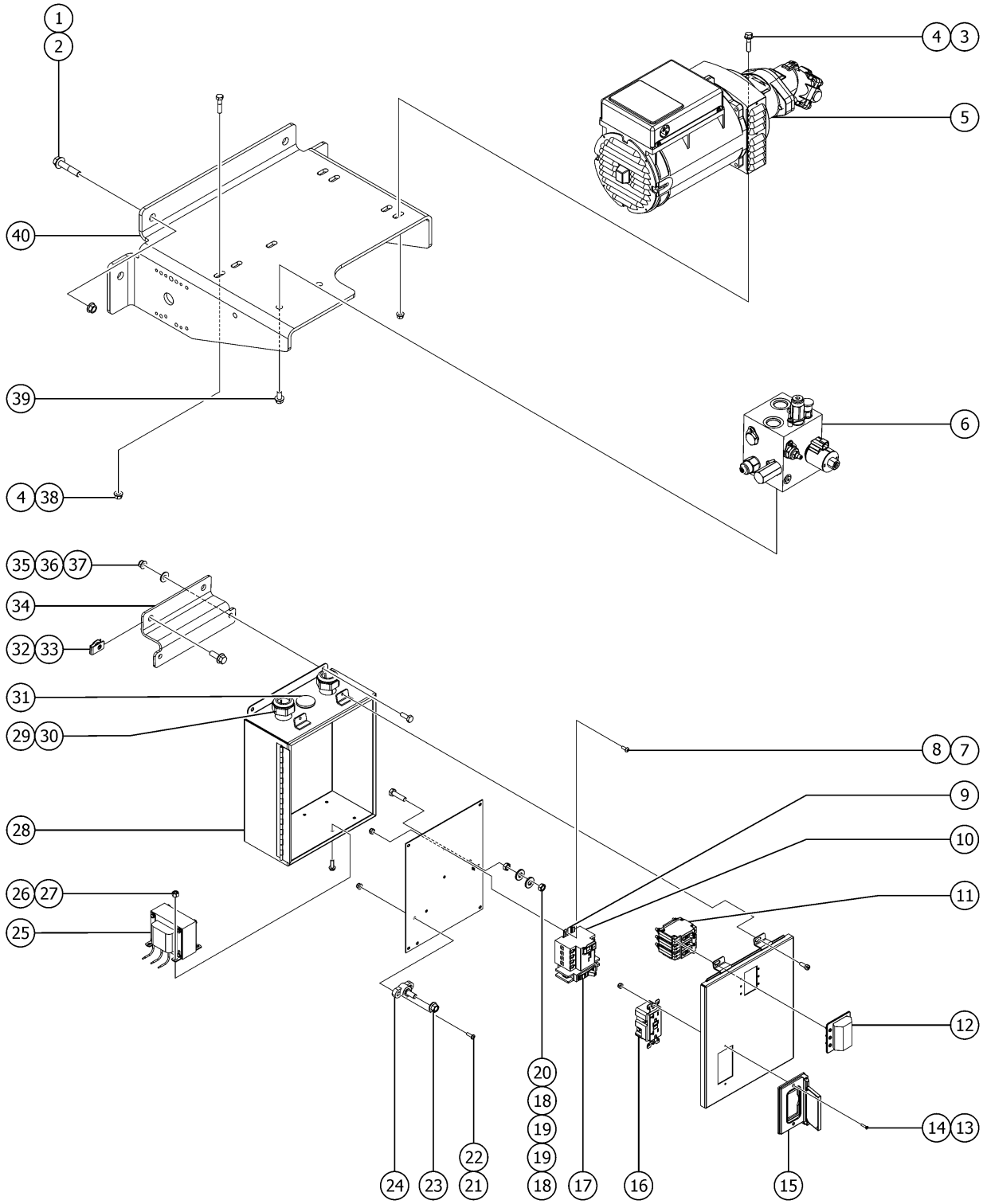

Item	Part No.	Description	Qty.
1	1258670GT	BOLT,CARRIAGE,1/2-13X2.5,5,ZAG	4
2	1274172GT	NUT,NYLOCK FLG,1/2-13,G,ZAG	4
3	824087GT	SCREW, HHF, 5/16-18 X 1.25, 8, ZAG	2
4	1274167GT	NUT,NYLOCK FLG,5/16-18,F,ZAG	3
5	1281786GT	GENERATOR, HYD, 13KW 60HZ, 240V 3PH to SN S60XCH-48077	1
5-	1285150GT	COVER, ACCESS, GEN COUPLING for 1281786	
5-	1285151GT	COUPLING, GEN DRIVE, MOTOR SIDE for 1281786	
5-	1285152GT	COUPLING, GEN DRIVE, GEN SIDE for 1281786	
5-	1285153GT	COUPLING, INSERT, GEN DRIVE for 1281786	
5B	1285508GT	GENERATOR, HYD, 13KW 60HZ, 240V 3PH from SN S60XCH-48078	1
6		REF. MANIFOLD, HYD, LIFT POWER, WELDER GENERATOR refer to 405.1	1
7	54365GT	SCREW,PHIL,PHM,10-32 X .5,SSTL	2
8	6178GT	NUT, NYLOCK, 10-32	3
9	825737GT	DIN RAIL, 4.60"	1
10	824617GT	CIRCUIT BREAKER,GFCI,3PH,63A,3	1
11	1276986GT	CIRCUIT BREAKER,MAGTRIP,3PH,40A	1
12	1276672GT	BOOT, ENVIRO, 3PH CIRCUIT BREAKER	1
13	63375GT	SCREW, FHM, 6-32 X .75	2
14	12344GT	NUT,NYLOCK,6-32	2
15	74006GT	COVER,GFCI,HORIZONTAL,WEATHER	1
16	80543GT	RECEPTACLE, 120VAC, 20A, GFCI	1
17	106073GT	CIRCUIT BREAKER,20A,SINGLE PH	1
18	6037GT	NUT,HEX,5/16-18,GR5 use until exhausted, (replaced by 1261250GT)	2
18B	1261250GT	NUT,5/16-18,8,ZAG	2
19	5397GT	WASHER, FLAT, USS, 5/16-18	2
20	13000GT	SCREW,HHC,5/16-18 X 1.25	1
21	1257227GT	SCREW,PHPM,10-32X.625,ZAG	2
22	1283005GT	NUT,NYLOCK FLG,10-32,A,ZAG	2

914.1 Welder Option, Chassis Components

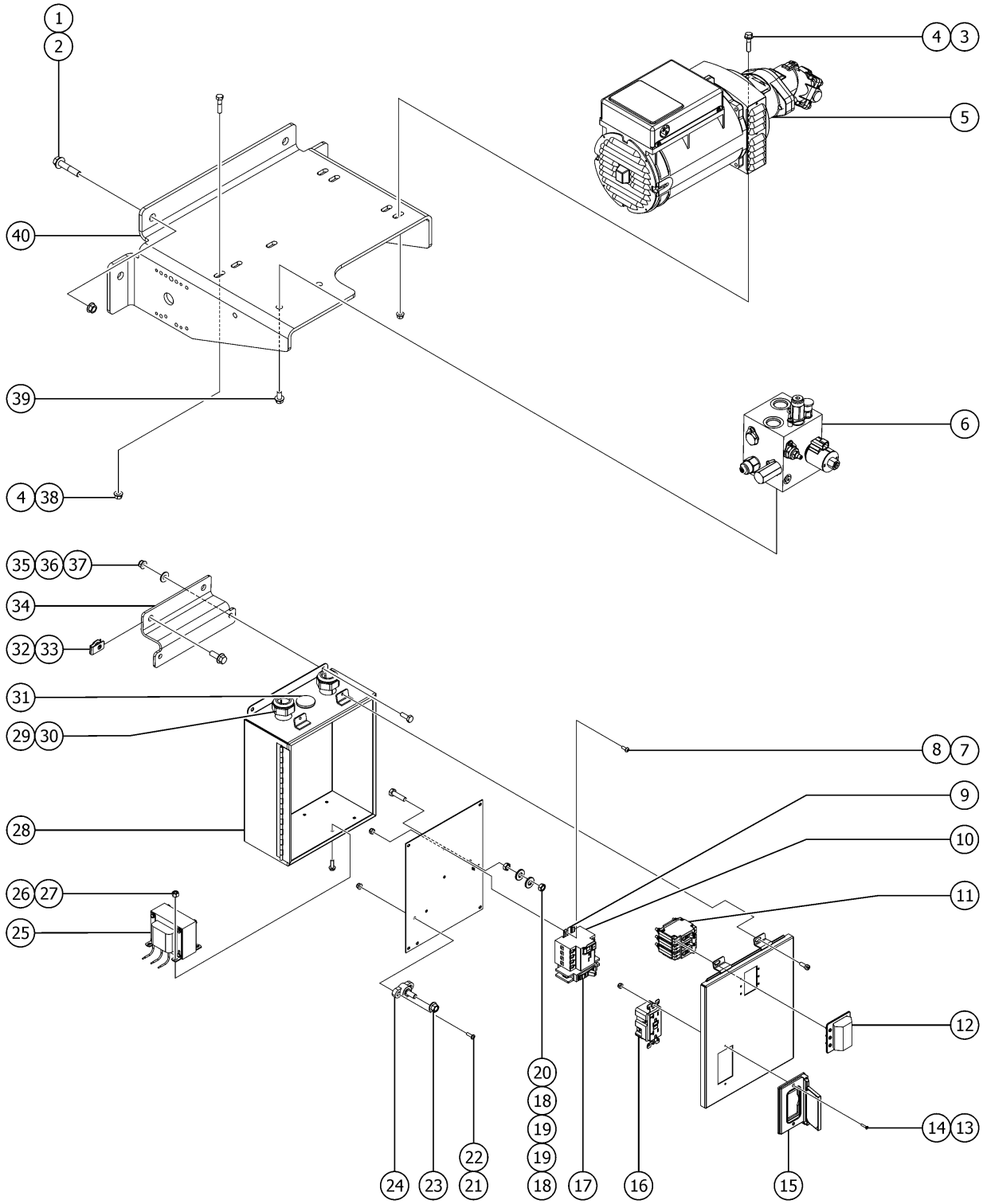

Item	Part No.	Description	Qty.
23	1274322GT	NUT,NYLOCK FLG,3/8-16,F,ZAG	1
24	94982GT	STANDOFF, 3/8" BLACK	1
25	1282963GT	TRANSFORMER, 139 TO 120 VOLT	1
26	1274170GT	NUT, NYLOCK, 10-24, A, ZAG	4
27	1270665GT	SCREW,HHF,10-24X.625,5,ZAG	4
28	1283843GT	ENCLOSURE, JBOX, 12X10	1
28B	1296591GT	KIT, BRACKET AND SCREW for 1283483	
29	20776GT	CABLE SQUEEZE CONN	2
29-	106104GT	O-RING,SEAL RING,1" NPT (PKG)	
30	18665GT	LOCKNUT,ELECTRIC,1" NPT	2
31	106495GT	PLUG,1/2" HUBBLE	1
32	29868GT	SPRING CLIP,3/8-16,.05-.20X.73,ZAG	4
33	824090GT	SCREW,HHF,3/8-16X1,8,ZAG	4
34	1283548GT	FORMING, MOUNT, JBOX, S65XC	2
35	1277924GT	NUT,NYLOCK FLG,1/4-20,F,ZAG	4
36	824113GT	WASHER,FLAT,USS,1/4,ZAG	4
37	824059GT	SCREW, HHC, 1/4-20 X .75, 8, ZAG	4
38	824066GT	SCREW,HHC,5/16-18X1.375,8,ZAG	1
39	824089GT	SCREW, HHF, 3/8-16 X .75, 8, ZAG	2
40	1283513GT	BRACKET, GENERATOR 13 kW to SN S65XCH-48299	1
40B	1311053GT	BRACKET, GENERATOR 13 kW, S65XC from SN S65XCH-48300	1

915.1 Welder Option, Platform Components

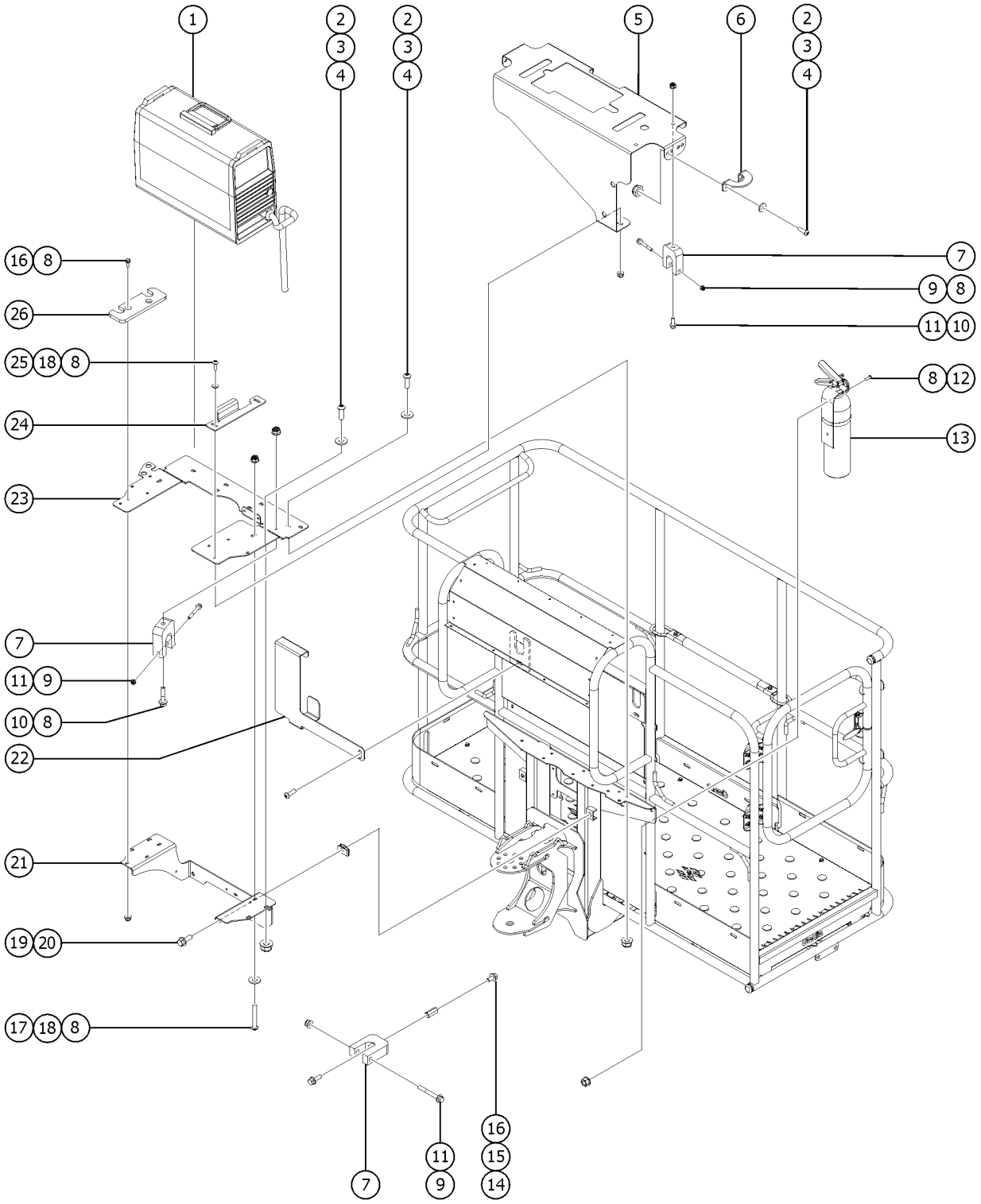

Item	Part No.	Description	Qty.
A	214620GT	SOCKET,3P,30A,4 WIRE, FEM	1
B	214621GT	SOCKET, BOOT, 3P, 30A, 4 WIRE	1
C	214623GT	PLUG, 3P,30A, 4 WIRE, MALE	1
D	214622GT	PLUG, BOOT, 3P, 30A, 4 WIRE	1
E	106275GT	KIT,WELD LEADS ASSY,V275S	1
1	101525GT	WELDER,INVERTEC V275-S (Lincoln)	1
1B	214619GT	WELDER, MILLER, CST 280 (Miller, Welder Ready) to SN S60XCH-47686, SN S65XCH-47686	1
1C	1312271GT	WELDER,MILLER,CST 282 from SN S60XCH-47687, SN S65XCH-47687	1
2	128322GT	SCREW,5/16-18X1.00,SECURITY TO	11
3	825358GT	WASHER,FLAT,5/16,USS,ZAG	11
4	1274167GT	NUT,NYLOCK FLG,5/16-18,F,ZAG	11
5	1277207GT	BRACKET,WELDER COVER,XC	1
6	217366GT	BRACKET,WELDER TOP	2
7	1288455GT	CLAMP, .820 DIA CABLE, TYPE-D, UHMW to SN S65XCH-49623	4
7B	13268GT	CLAMP,0.75,#12 X 1/4,RUB CUSH from SN S65XCH-49624	4
8	1277924GT	NUT,NYLOCK FLG,1/4-20,F,ZAG (Miller, Welder Ready)	15
8B	1277924GT	NUT,NYLOCK FLG,1/4-20,F,ZAG (Lincoln)	9
9	1253485GT	SCREW,HHF,1/4-20X2,8,ZAG to SN S65XCH-49623	4
9B	824078GT	SCREW,HHF,1/4-20X.75,8,ZAG from SN S65XCH-49624	2
10	824079GT	SCREW,HHF,1/4-20X1,8,ZAG to SN S65XCH-49623	3
10B	824078GT	SCREW,HHF,1/4-20X.75,8,ZAG from SN S65XCH-49624	1
11	1277924GT	NUT,NYLOCK FLG,1/4-20,F,ZAG (Lincoln) to SN S65XCH-49623	4
12	1256124GT	SCREW,BHC,1/4-20X.75,F835,ZAG	2
13	88406GT	FIRE EXTINGUISHER	1
14	824077GT	SCREW, HHF, 1/4-20 X .5, 8, ZAG	1
15	1290424GT	NUT,COUPLING,1/4-20X.875,F594,SS	1
16	824078GT	SCREW,HHF,1/4-20X.75,8,ZAG (Miller, Welder Ready)	5
16B	824078GT	SCREW,HHF,1/4-20X.75,8,ZAG (Lincoln) to SN S65XCH-49623	1

915.1 Welder Option, Platform Components

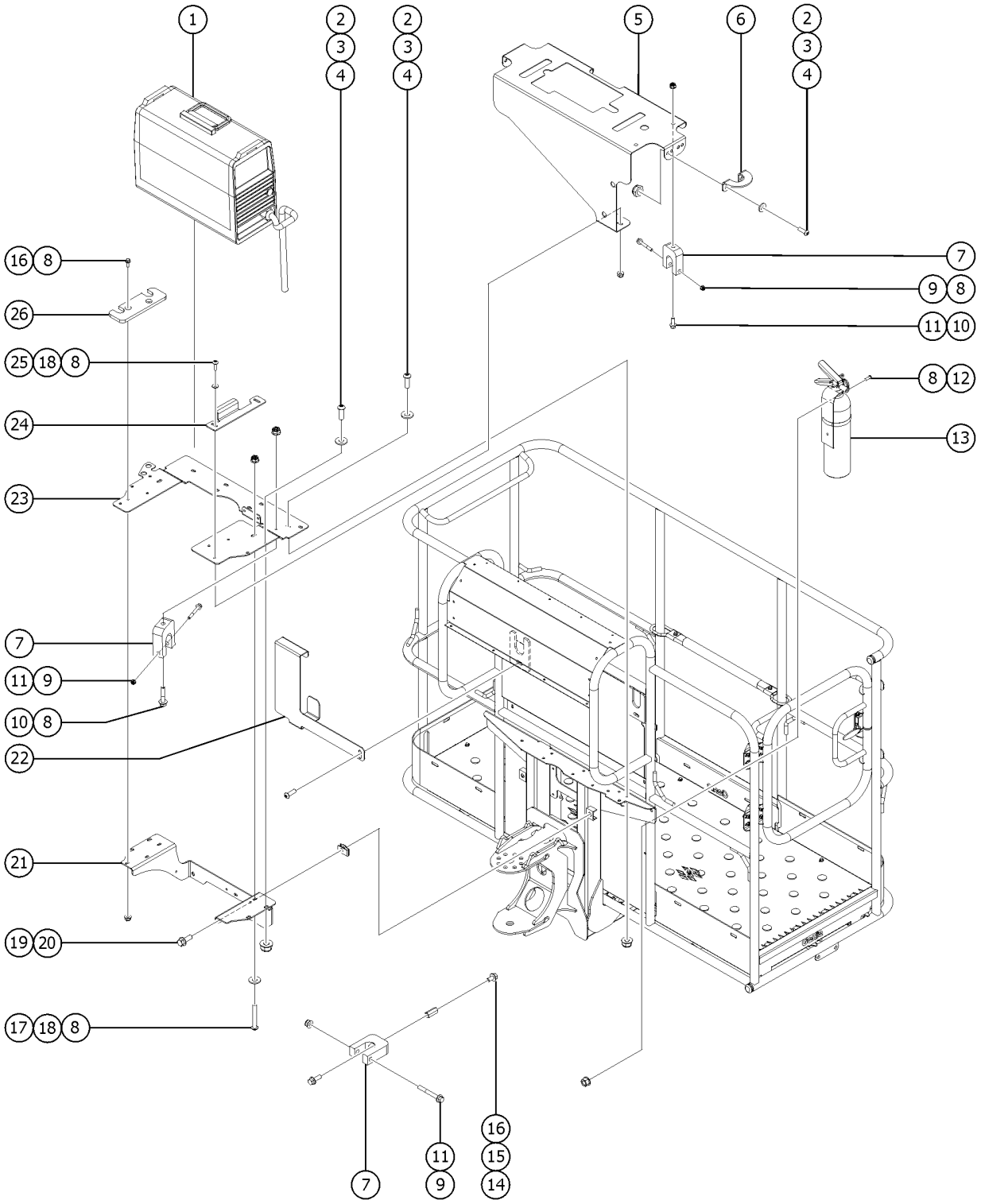

Item	Part No.	Description	Qty.
16C	824077GT	SCREW, HHF, 1/4-20 X .5, 8, ZAG (Lincoln) from SN S65XCH-49624	1
17	106141GT	SCREW,SECURITY,1/4-20 X 1.75LG	4
18	824113GT	WASHER,FLAT,USS,1/4,ZAG (Lincoln)	4
18B	824113GT	WASHER,FLAT,USS,1/4,ZAG (Miller, Welder Ready)	2
19	824090GT	SCREW,HHF,3/8-16X1,8,ZAG	2
20	29868GT	SPRING CLIP,3/8-16,.05-.20X.73,ZAG	2
21	1277206GT	FORMING,WELD MNT SPRT,LOWER,XC	1
22	106204GT	BRACKET,V275S WELD LEADS	1
23	1277205GT	FORMING,WELDER SPRT BRKT,XC	1
24	1277208GT	FORMING,MILLER WELDER RETENTION,XC (Miller, Welder Ready) to SN S60XCH-47686, SN S65XCH-47686	1
25	106860GT	SCREW,SECURITY,1/4-20 X 1.00LG to SN S60XCH-47686, SN S65XCH-47686	2
25B	106860GT	SCREW,SECURITY,1/4-20 X 1.00LG from SN S60XCH-47687, SN S65XCH-47687	1
26	1274967GT	UHMW,MILLER WLDR RETENTION (Miller, Welder Ready) to SN S60XCH-47686, SN S65XCH-47686	2
26B	1312547GT	UHMW,MILLER WELDER RETENTION from SN S60XCH-47687, SN S65XCH-47687	2

916.1 3K Hydraulic Generator

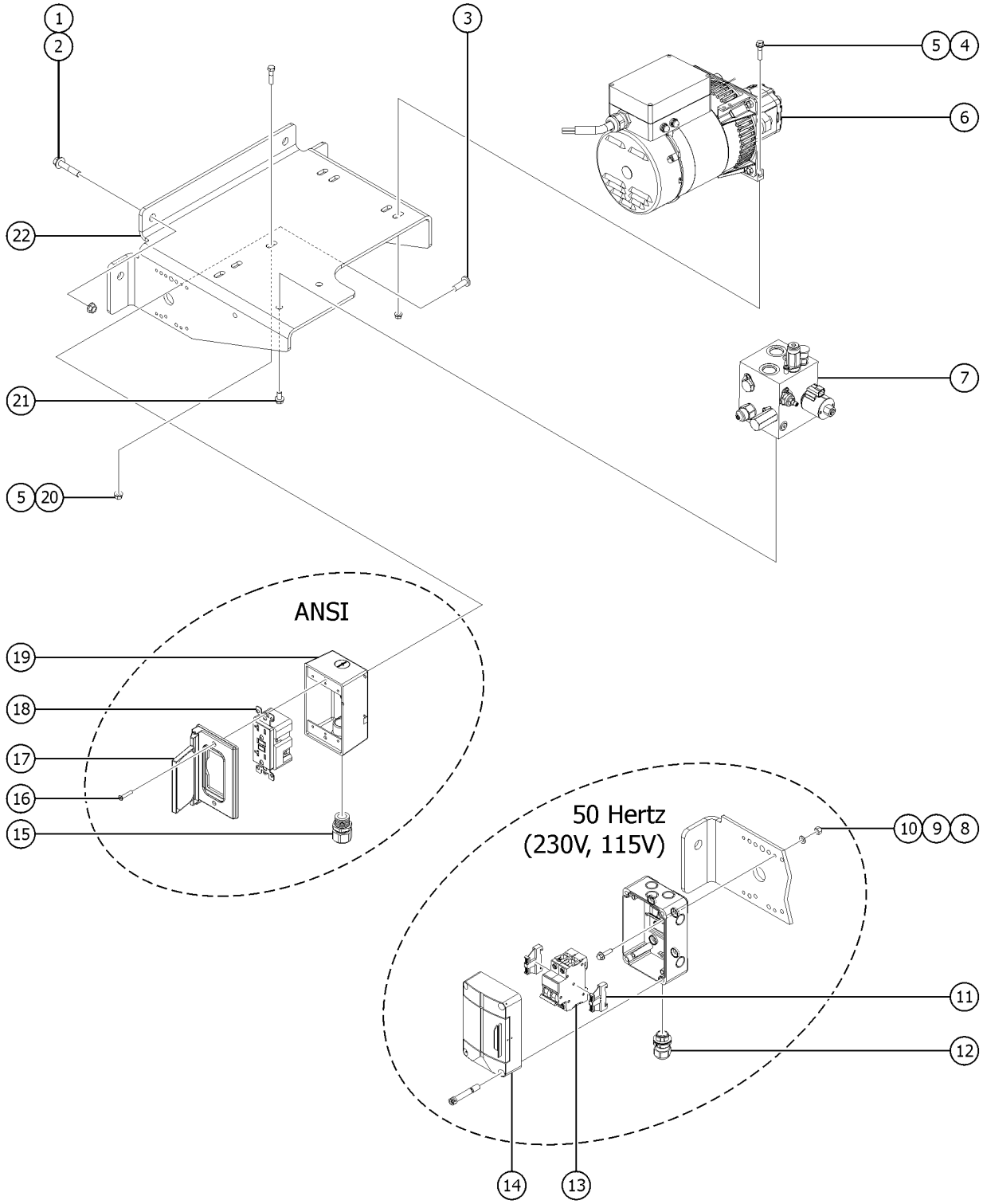

Item	Part No.	Description	Qty.
1	1255802GT	SCREW,HHF,1/2-13X2.5,8,ZAG to SN S65XCH-46365	4
1-	1258670GT	BOLT,CARRIAGE,1/2-13X2.5,5,ZAG from SN S65XCH-46366	
2	1261724GT	NUT,SERRATED,1/2-13,8,ZAG to SN S65XCH-46365	4
2-	1274172GT	NUT,NYLOCK FLG,1/2-13,G,ZAG from SN S65XCH-46366	
3	1257296GT	SCREW,PHPM-ST,8.32X.50,TYPE F	4
4	824087GT	SCREW, HHF, 5/16-18 X 1.25, 8, ZAG	2
5	1274167GT	NUT,NYLOCK FLG,5/16-18,F,ZAG	3
6	1279869GT	GEN, 3.0 kW, 50Hz, DUAL VOLTAGE (non-ANSI)	1
6A-	824220GT	SCREW,PHPM SEMS ET,10-24X.5,ZA	
6B	1272433GT	GEN, 3.0 KW, 120V/60HZ (ANSI)	1
6B-	824220GT	SCREW,PHPM SEMS ET,10-24X.5,ZA	
7		REF. MANIFOLD, HYD, LIFT POWER, WELDER GENERATOR (refer to 405.1)	1
8	826214GT	NUT,TL,M5-0.8,DIN980,10,ZAB	4
9	826215GT	WASHER,FLAT,M5,DIN125,ZAB	4
10	218458GT	SCREW,HHF,M5-0.8X20,DIN6921,10.9,ZAB	4
11	74913GT	END STOP, DIN RAIL,SCREW CLAMP	2
12	1287081GT	CORD GRIP, CLICK 20, BLACK, 0.276-0.512	2
13	1261795GT	RCBO, 10A, 30MA, TYPE B, 240V, 50HZ (230V)	1
13B	231868GT	RCBO,16A,30MA,6KA 110/230VAC (115V)	1
14	1269086GT	ENCLOSURE, FUSE, MODULAR, 100x150x96, IP65	1
15	7056GT	CONN,SQUEEZE,1/2NPT .38-.50,SM use until exhausted, (replaced by 61278)	1
15B	61278GT	CONN. SQZ,1/2NPT .56-.63.	1
16	1253489GT	SCREW,FHPM,6-32 X .75,ZAG	2
17	74006GT	COVER,GFCI,HORIZONTAL,WEATHER	1
18	80543GT	RECEPTACLE, 120VAC, 20A, GFCI	1
19	10775GT	T-BOX, 2.75 X 4.5 X 2.0** to SN S65XCH-47139	1
19B	1310378GT	T-BOX, 2.75 X 4.5 X 2.0** from SN S65XCH-47140	1
19-	1284310GT	HARNESS, JUMPER, GND, TBOX	1

916.1 3K Hydraulic Generator

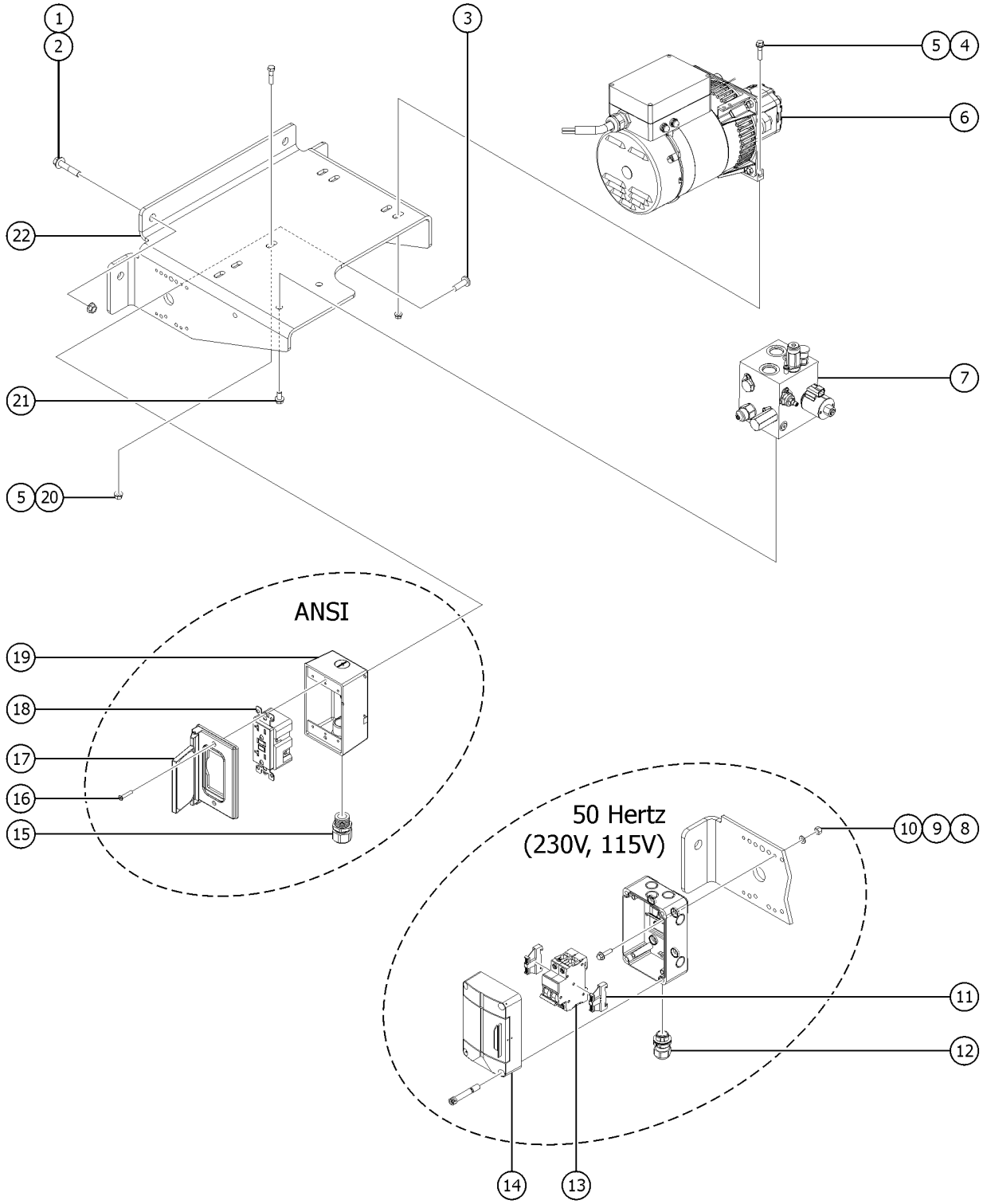

Item	*Part No.*	*Description*	*Qty.*
20	824066GT	SCREW,HHC,5/16-18X1.375,8,ZAG	1
21	824089GT	SCREW, HHF, 3/8-16 X .75, 8, ZAG	2
22	1283513GT	BRACKET, GENERATOR 13 kW to SN S65XCH-48299	1
22B	1311053GT	BRACKET, GENERATOR 13 kW, S65XC from SN S65XCH-48300	1

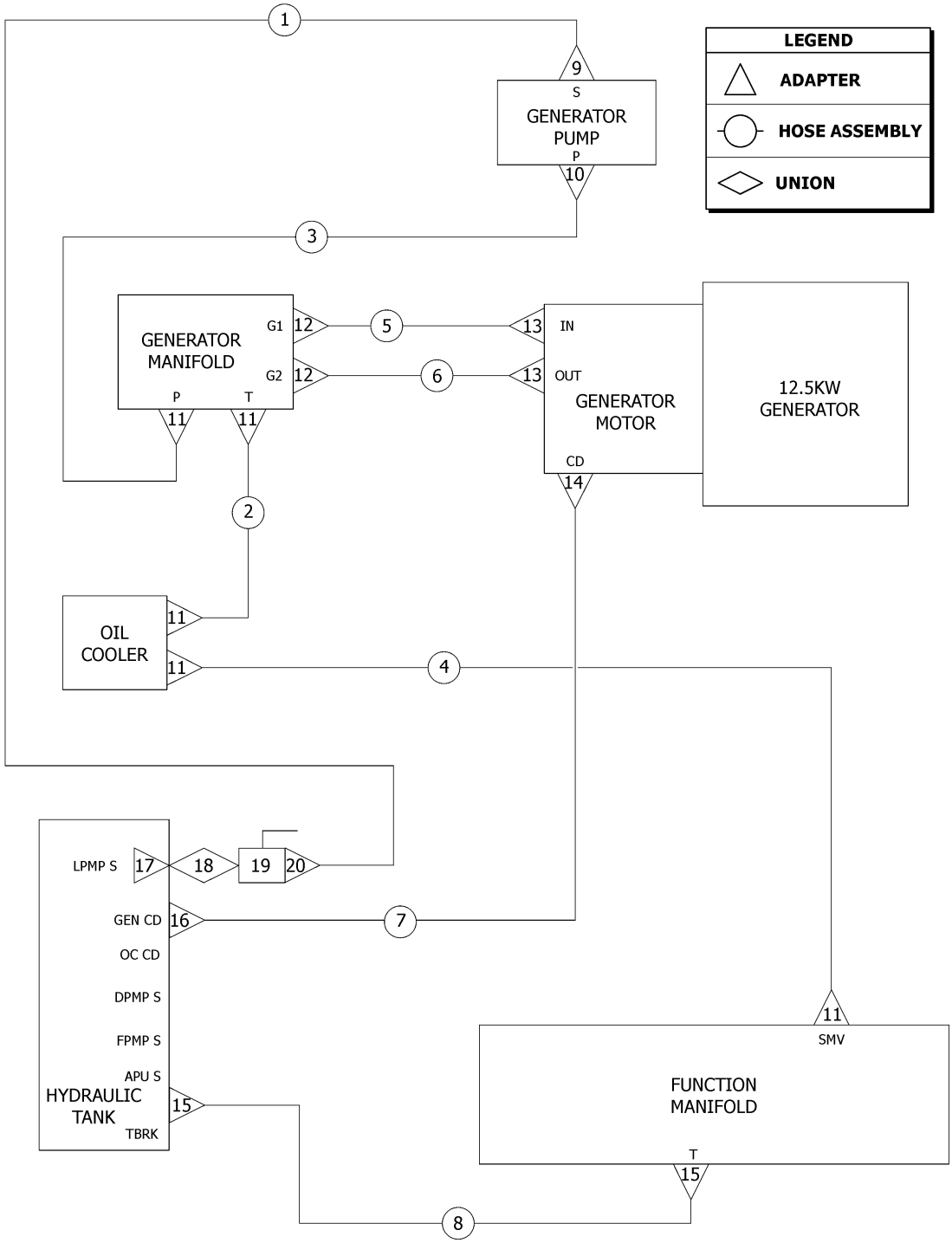
LEGEND
ADAPTER
HOSE ASSEMBLY
UNION
1
9
S
GENERATOR
PUMP
P
10
3
GENERATOR
MANIFOLD
G1
12
5
13
IN
G2
12
6
13
OUT
P
T
11
11
GENERATOR
MOTOR
CD
14
12.5KW
GENERATOR
2
OIL
COOLER
11
11
4
LPMP S
17
18
19
20
GEN CD
16
7
OC CD
DPMP S
FPMP S
APU S
HYDRAULIC
TANK
TBRK
15
11
SMV
FUNCTION
MANIFOLD
T
15
8

Item	Part No.	Description	Qty.
1	1288891-7874GT	HOSE ASSY,1"	1
2	61074-9646GT	HOSE ASSY,1,STR FEM,45 FEM	1
3	61074-5710GT	HOSE ASSY,1,STR FEM,90 FEM	1
4	61074-5710GT	HOSE ASSY,1,STR FEM,90 FEM	1
5	61073-2697GT	HOSE ASSY,3/4,STR FEM,90 FEM	1
6	61073-3012GT	HOSE ASSY,3/4,STR FEM,90 FEM	1
7	49130-9843GT	HOSE ASSY,3/8,STR FEM,STR FEM,	1
8	88949-3828GT	HOSE ASSY 1",STR FEM,STR FEM	1
9	88936GT	CONN,520120-20-16	1
10	48959GT	FITTING,ELBOW,90D,520220-12	1
11	48960GT	FITTING,CONN,520120-12***	5
12	61610GT	CONN,LONG,520122-12***	2
13	48974GT	ELBOW,90D,520220-12-10	2
14	48915GT	ELBOW,90D,520220-6	1
15	48984GT	CONN, 520120-16	2
16	48929GT	FITTING,ELBOW,90D,520220-6-8	1
17	101491GT	STRAINER,20 SAE F/24 SAE M***	1
18	61263GT	UNION,STR.THREAD 20	1
19	101494GT	VALVE,BALL,FSAE-20,FSAE-20	1
20	75654GT	CONN,520120-20	1

918.1 Oil Cooler Components

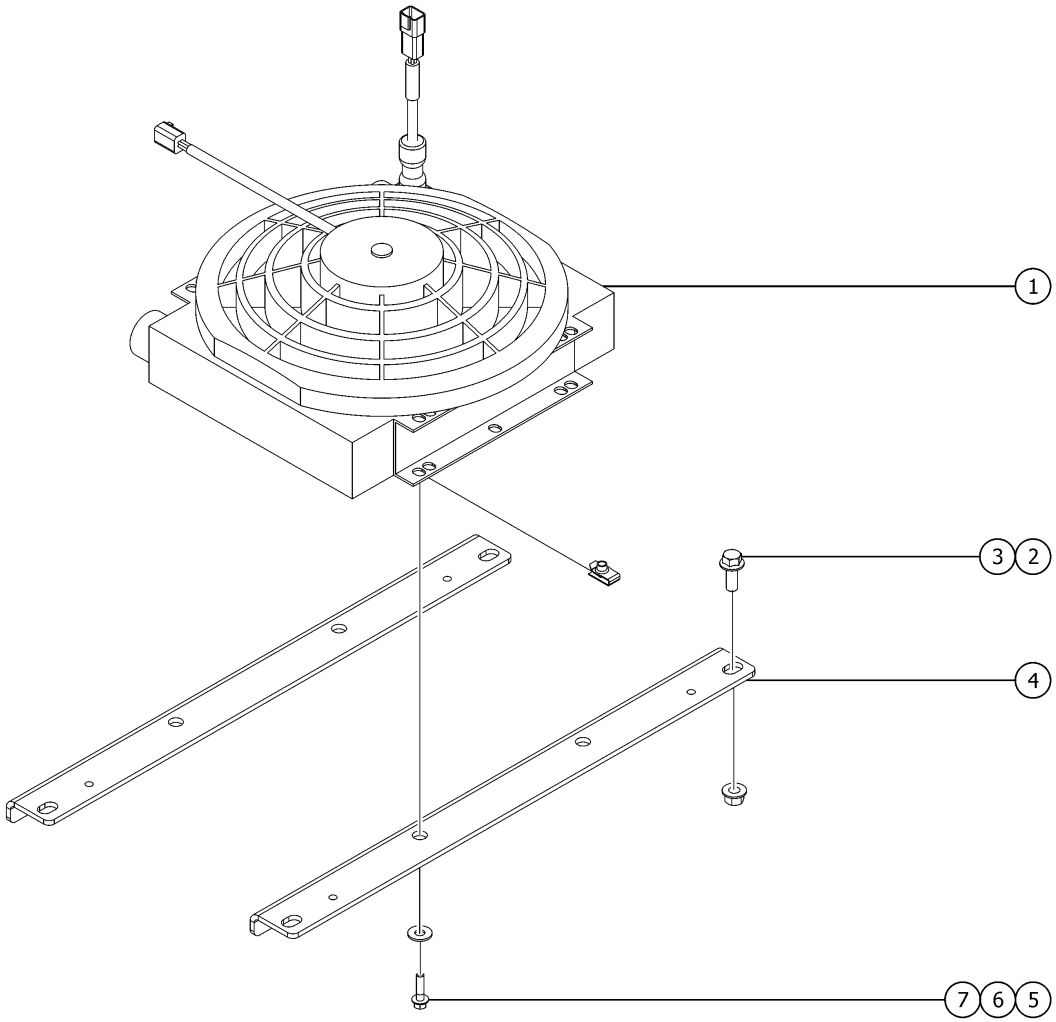

Item	Part No.	Description	Qty.
1	71259GT	OIL COOLER W/FAN, 12VDC	1
1-	75854GT	FAN - VENTED	
1-	75855GT	THERMOSTAT -OIL COOLER (71259)	
2	824090GT	SCREW,HHF,3/8-16X1,8,ZAG	4
3	1274322GT	NUT,NYLOCK FLG,3/8-16,F,ZAG	4
4	1283549GT	FORMING, OIL COOLER SUPPORT, S65XC	2
5	824079GT	SCREW,HHF,1/4-20X1,8,ZAG	4
6	824113GT	WASHER,FLAT,USS,1/4,ZAG	4
7	56912GT	SPRING CLIP,1/4-20,.025-.15X.54,ZAG	4

919.1 2nd LP Tank Carrier

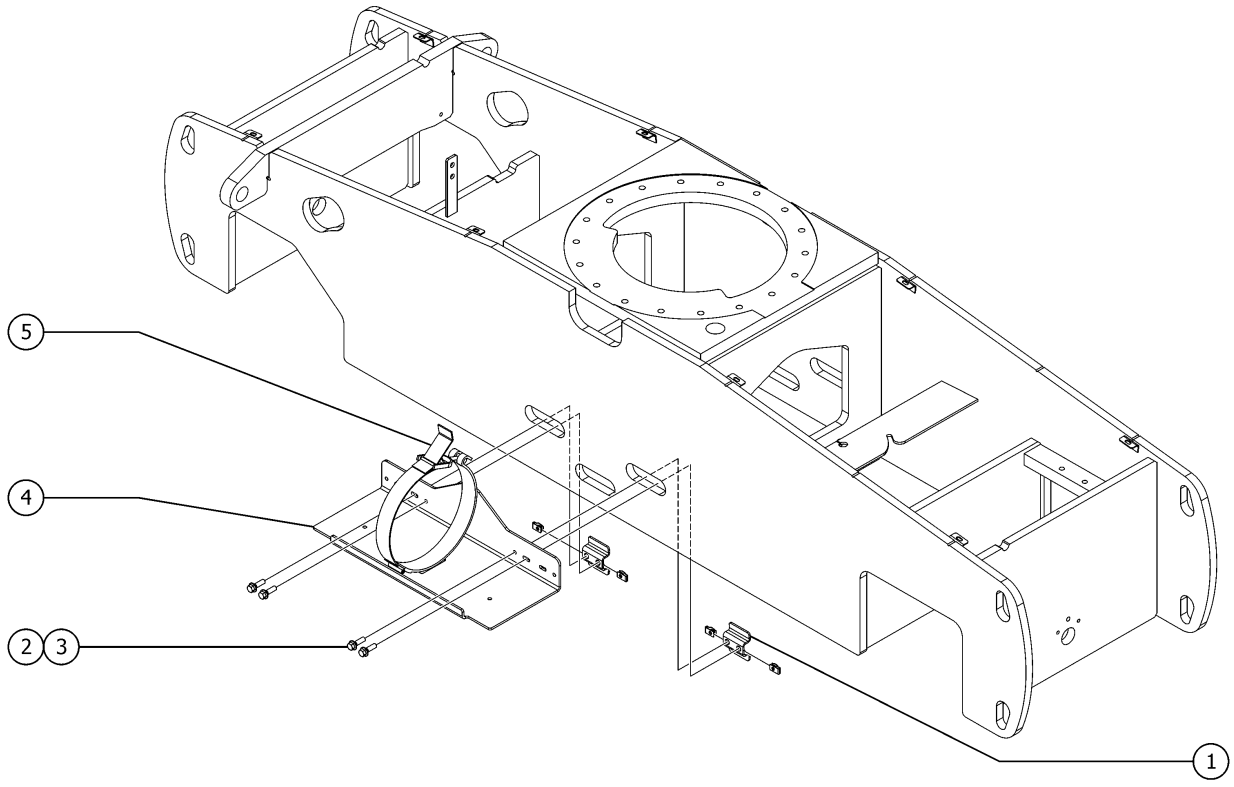

Item	Part No.	Description	Qty.
A		NOTE: The 2nd LP Carrier may be located on either side of the machine	
1	1255731GT	FORMING,LP BRACKET MOUNT	2
2	824091GT	SCREW, HHF, 3/8-16 X 1.25, 8, ZAG	4
3	29868GT	SPRING CLIP,3/8-16,.05-.20X.73,ZAG	4
4	1255730GT	WELDMENT,L.P. TANK MOUNT ***	1
5	49000GT	L.P.TANK LATCH	1

920.1 Tow Package

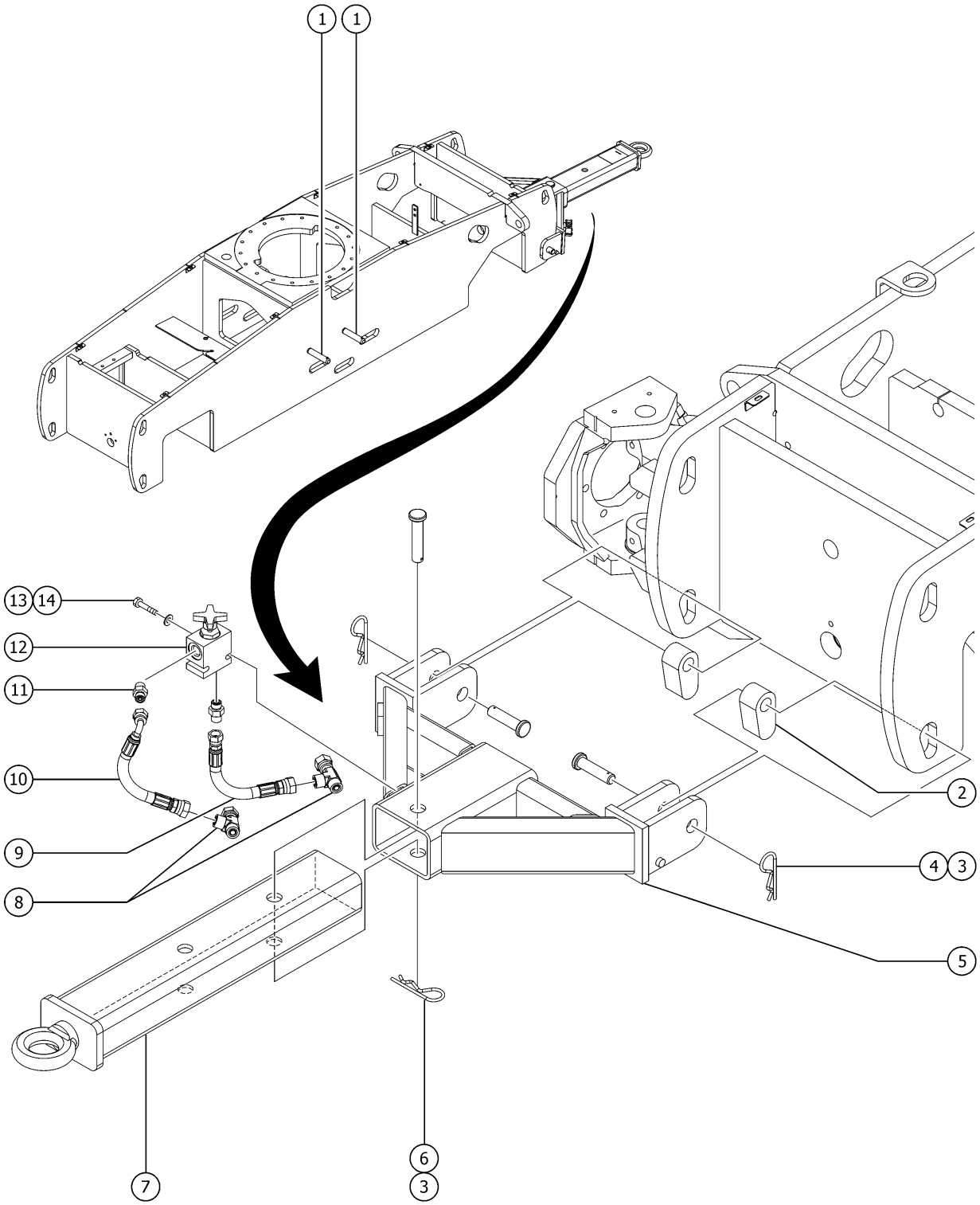

920.1 Tow Package

Item	Part No.	Description	Qty.
1	47025GT	PIN,STORAGE,TOW PACKAGE used to store 94420 WELDMENT,PULL BAR	2
2	1255727GT	PLATE,CHASSIS ATTACHMENT	2
3	233108GT	RUE RING 1.25,ZAG	3
4	1257868GT	PIN,CLEVIS,1.25X5.0,ZAG	2
5	1255728GT	WELDMENT,TOW BAR decal not included, refer to section 100	1
6	1257869GT	PIN,CLEVIS,1.25X6.0,ZAG	1
7	1255726GT	WELDMENT,PULL BAR	1
8	48875GT	TEE,RUN,SWIVEL,520432-6	2
9	49120-7131GT	HOSE ASSEMBLY,1/4" attach to right front steer cylinder	1
10	49163-7144GT	HOSE ASSEMBLY,1/4" includes 90-degree elbow fitting; attach to left steer cylinder	1
11	48912GT	CONN,520120-4-6***	2
12	25282GT	VALVE,NEEDLE,BRAKE RELEASE	1
13	824063GT	SCREW,HHC,1/4-20X1.75,8,ZAG	2
14	824113GT	WASHER,FLAT,USS,1/4,ZAG	2

921.1 Fall Arrest Bar

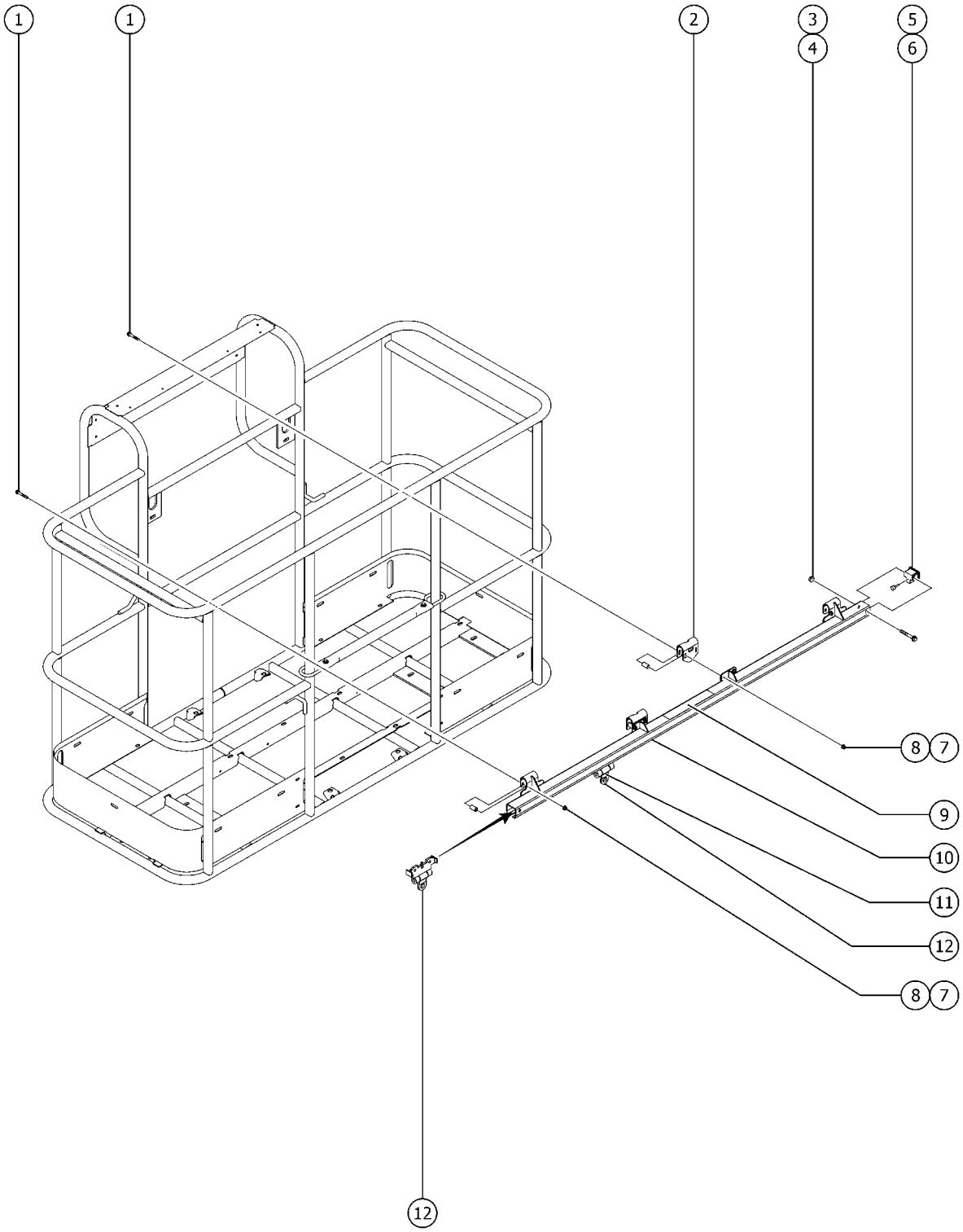

Item	Part No.	Description	Qty.
1	1256856GT	SCREW,HHF,3/8-16X2.5,8,ZAG	8
2	1256389GT	FORMING,INNER HANGER	2
3	1251997GT	NUT,TL FLG,1/2-13,G,ZAG	2
4	1256851GT	SCREW,HHF,1/2-13X3.5,8,ZAG	2
5	1260892GT	END STOP. TFAAS TRACK	2
6	36388GT	BUMPER,RUBBER,.75 X .50H,STUD	2
7	1274322GT	NUT,NYLOCK FLG,3/8-16,F,ZAG	8
8	1256481GT	SPACER, HANGER BRACKET	8
9	1256400GT	DECAL,TFAAS TRACK,WORD	1
9B	1260910GT	DECAL,TFAAS TRACK,SYMBOL	1
9C	1256400FRGT	DECAL,TFAAS TRACK,WORD FR	1
10	1256377GT	ACC,TFAAS FALL ARREST,8FT WORD includes instructions and decals	1
10A-	1256379GT	ASSY,TFAAS TRACK,8FT WORD includes decals	
10B	1261022GT	ACC,TFAAS FALL ARREST,8FT SYM includes instructions and decals	1
10B-	1261024GT	ASSY,TFAAS TRACK,8FT SYM includes decals	
10C	1261018GT	ACC,TFAAS FALL ARREST,8FT FR includes instructions and decals	1
10C-	1261020GT	ASSY,TFAAS TRACK,8FT FR includes decals	
10D	1256378GT	ACC,TFAAS FALL ARREST,6FT WORD includes instructions and decals	1
10D-	1256380GT	ASSY,TFAAS TRACK,6FT WORD includes decals	
10E	1261023GT	ACC,TFAAS FALL ARREST,6FT SYM includes instructions and decals	1
10E-	1261025GT	ASSY,TFAAS TRACK,6FT SYM includes decals	
10F	1261019GT	ACC,TFAAS FALL ARREST,6FT FR includes instructions and decals	1
10F-	1261021GT	ASSY,TFAAS TRACK,6FT FR includes decals	
11	40434GT	DECAL,LANYARD ANCHORAGE POINT	1
12	1256439GT	TROLLEY, TFAAS TRACK	1

922.1 Lift Guard Contact Alarm (to SN S65XCH-48083)

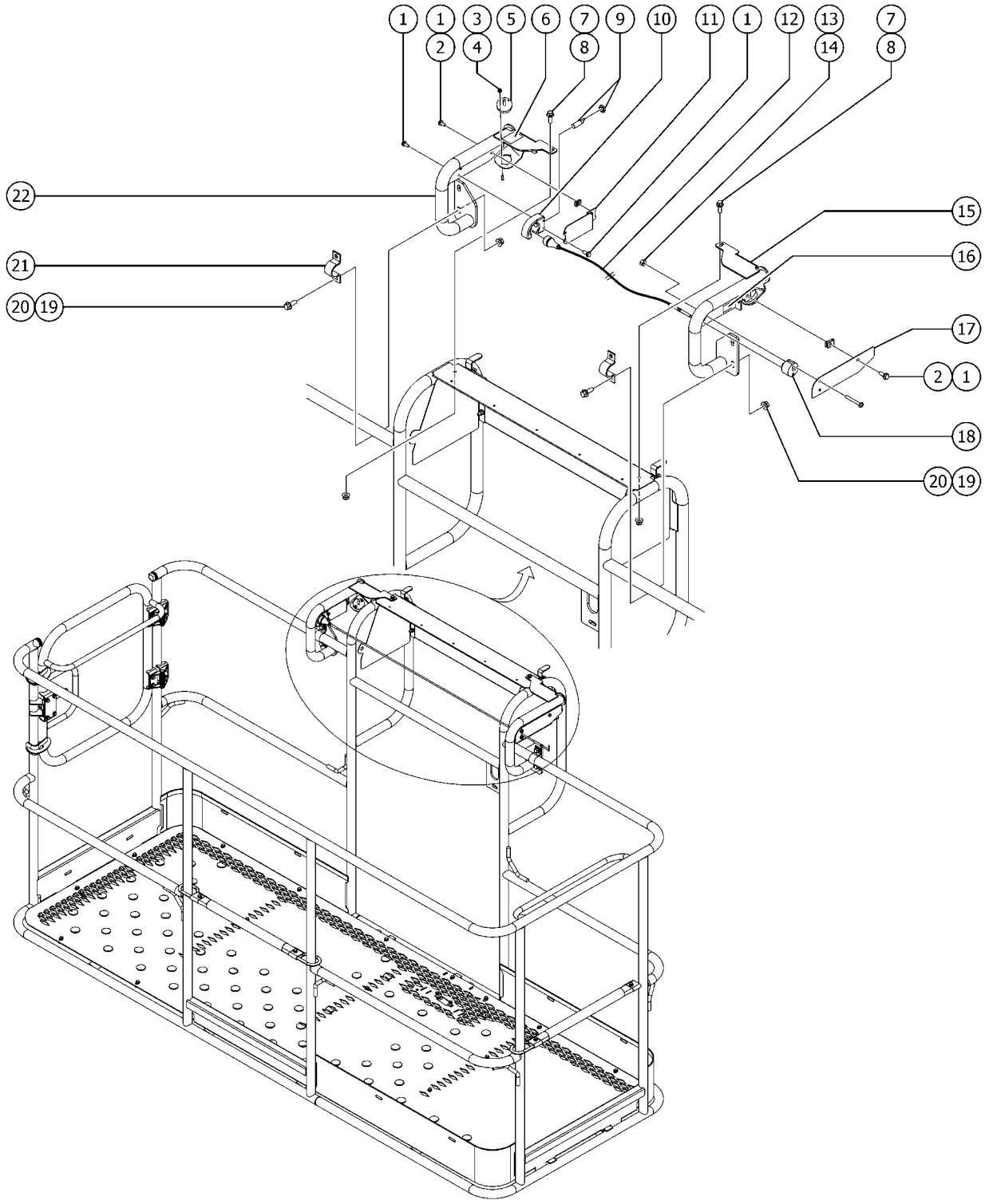

922.1 Lift Guard Contact Alarm (to SN S65XCH-48083)

Item	Part No.	Description	Qty.
A	1278108GT	HARNESS, CONTACT ALARM, S40,S60,S80	
B	19274GT	RELAY,SPDT,12V(AUTO)**	
C	1278121GT	MODULE, PLUS+1, OPA2	
C-	824083GT	SCREW,HHF,1/4-20X2.5,8,ZAG	
C-	1277924GT	NUT,NYLOCK FLG,1/4-20,F,ZAG	
1	1264934GT	SCREW,HHF,10-24X.5	7
2	73575GT	SPRING CLIP,10-24,.025-.125X.468,ZAG	2
3	12344GT	NUT,NYLOCK,6-32	4
4	1256859GT	SCREW,PHPM,6-32X.875,ZAG	4
5	1278111GT	ASSEMBLY, LIGHT, CONTACT ALARM	2
5B	1285850GT	ASSEMBLY,AMBER LIGHTS,CONTACT	
6	1278542GT	DECAL, INSTRUCTION, CONTACT ALARM	1
7	824078GT	SCREW,HHF,1/4-20X.75,8,ZAG	2
8	1277924GT	NUT,NYLOCK FLG,1/4-20,F,ZAG	2
9	1278119GT	ASSEMBLY, SENSOR, PROX, CONTACT ALARM	1
10	1278433GT	ASSY SENSOR W/HOUSING (Includes holder item 1277877 and sensor part 1278119)	1
10-	1277877GT	HOLDER, SENSOR	
11	1277873GT	FORMING, SENSOR HOLDER	1
12	1278416GT	ASSEMBLY,CONTACT ALARM CABLE, LARGE	1
12-	1261184GT	NUT,1/4-20,8,ZAG Part of assembly 1278416	
12-	1278124GT	MAGNET, 1/4-20, 15 LB. Part of assembly 1278416	
12-	1278368GT	GRIP, CABLE Part of assembly 1278416	
12-	1278458GT	CONTACT ALARM WIRE ASSY, LARGE Part of assembly 1278416	
13	1274168GT	NUT,NYLOCK,10-32,A,ZAG	2
14	824216GT	SCREW, PHPM, 10-32 X 1.5, ZAG	2
15	1278138GT	WELDMENT, RIGHT CONTACT ALARM, LARGE	1
15-	824037GT	NUT, HH JAM, 1/4-20, A, ZAG	
15-	1277924GT	NUT,NYLOCK FLG,1/4-20,F,ZAG	

922.1 Lift Guard Contact Alarm (to SN S65XCH-48083)

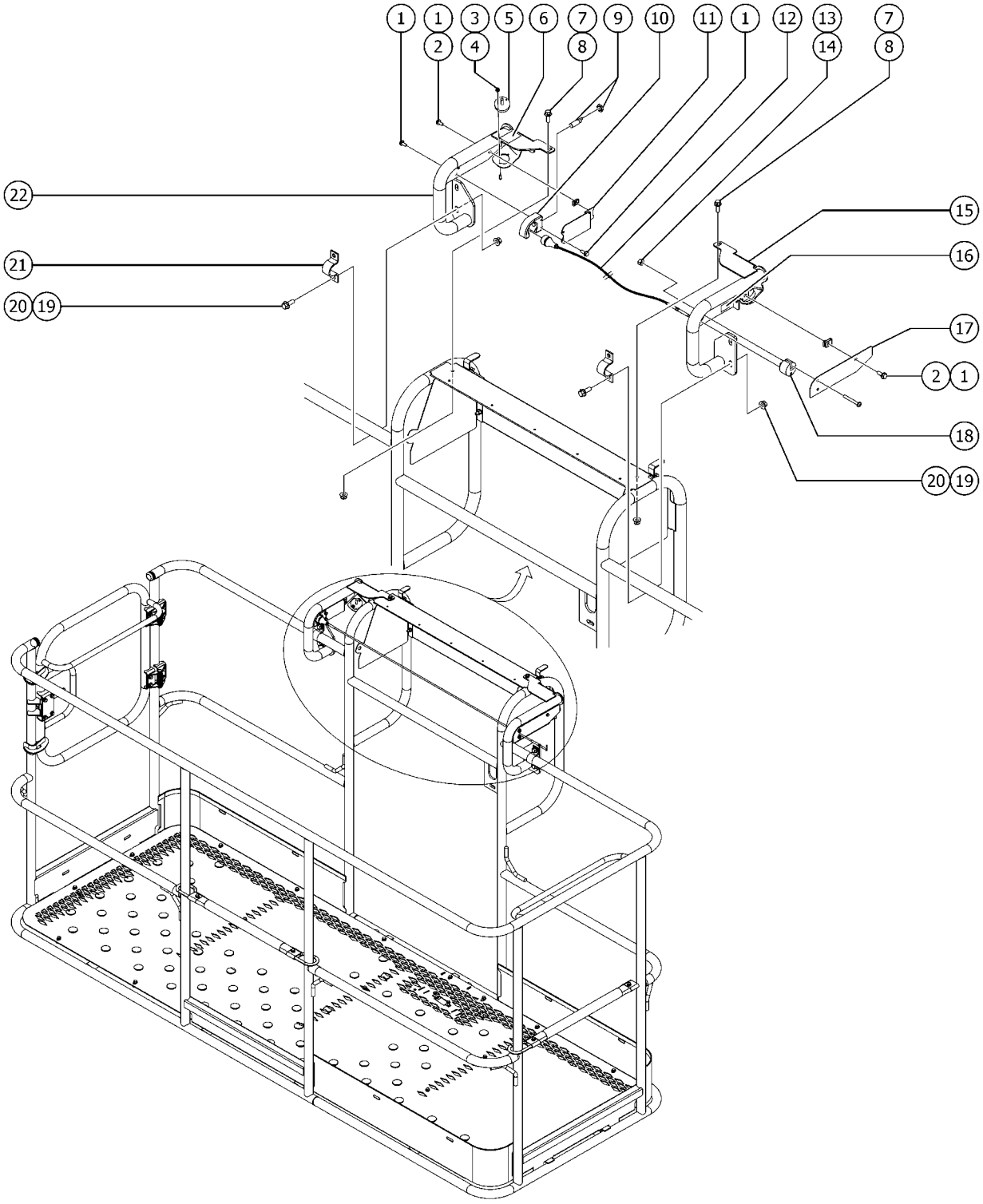

922.1 Lift Guard Contact Alarm (to SN S65XCH-48083)

Item	*Part No.*	*Description*	*Qty.*
16	1278982GT	DECAL, INSTRUCTION, ACTUATOR SWITCH SOCKET	1
17	1277875GT	PLATE, CABLE AND WIRE COVER	1
18	1277876GT	GUIDE, CABLE	1
19	1274322GT	NUT,NYLOCK FLG,3/8-16,F,ZAG	4
20	824090GT	SCREW,HHF,3/8-16X1,8,ZAG	4
21	1278363GT	CLAMP, 1.25 INCH TUBE	2
22	1278144GT	WELDMENT, LEFT CONTACT ALARM, LARGE	1

922.2 Gen II Contact Alarm Option (from SN S65XCH-48084)

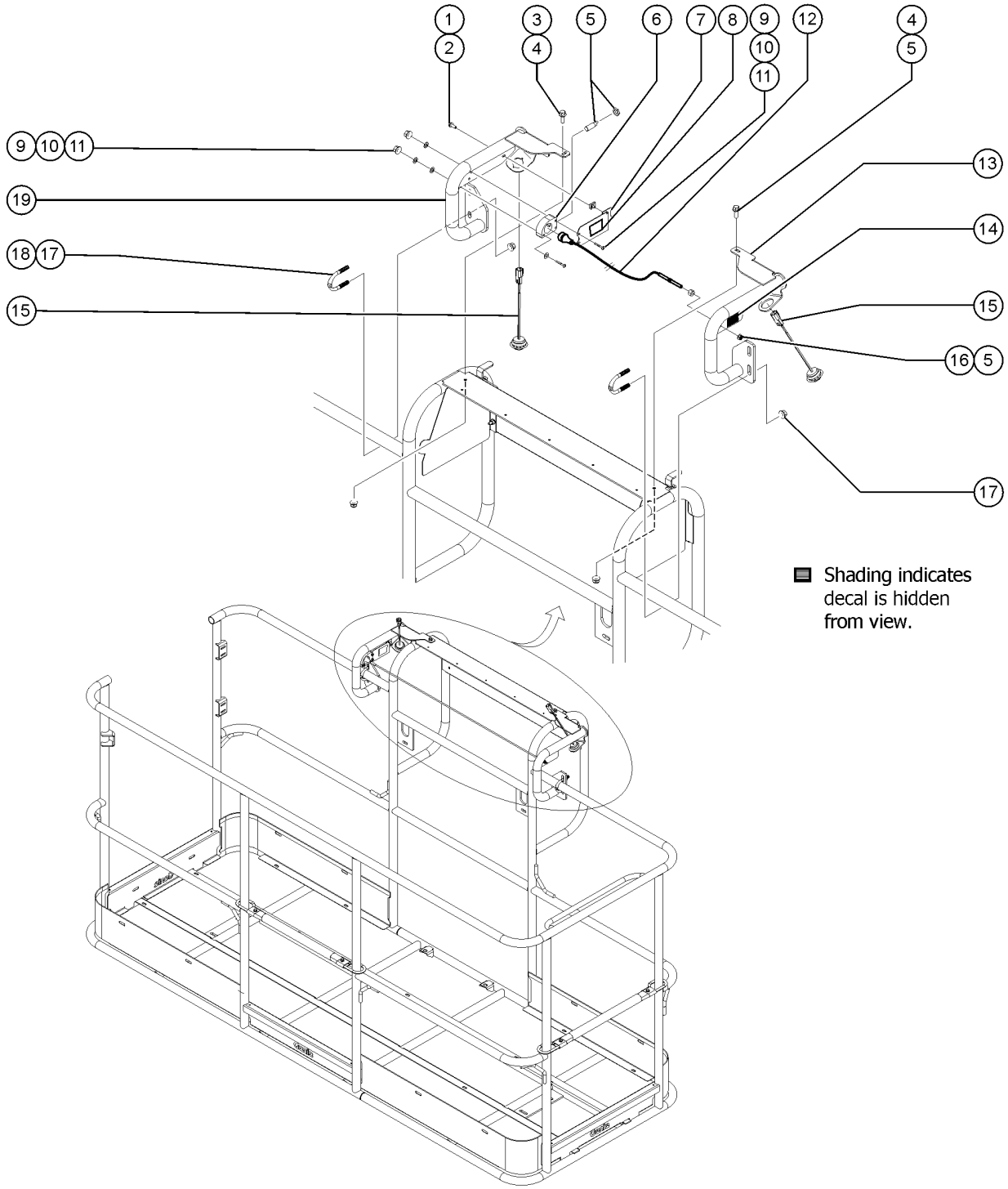

922.2 Gen II Contact Alarm Option (from SN S65XCH-48084)

Item	Part No.	Description	Qty.
A	1278336GT	OPTION, CONTACT ALARM, ALC600	
1	1264934GT	SCREW,HHF,10-24X.5	1
2	73575GT	SPRING CLIP,10-24,.025-.125X.468,ZAG	1
3	824078GT	SCREW,HHF,1/4-20X.75,8,ZAG	2
4	1277924GT	NUT,NYLOCK FLG,1/4-20,F,ZAG	3
5	1278119GT	ASSEMBLY, SENSOR, PROX, CONTACT ALARM	1
6	1307644GT	ASSY, SENSOR W/ HOUSING (Includes holder item 1306899 and sensor part 1278119)	1
6-	1306899GT	HOLDER, SENSOR	1
7	1277873GT	FORMING, SENSOR HOLDER	1
8	1278542GT	DECAL, INSTRUCTION, CONTACT ALARM	1
9	1280278GT	SCREW,PHPM,10-24X1.375,ZAG	3
10	1307739GT	Nut,#10-24 Nickel Plated Acorn	3
11	1253185GT	WASHER,FLAT,#10,USS,ZAG	5
12	1306900GT	CONTACT ALARM WIRE ASSY, LARGE	1
12-	1278124GT	MAGNET, 1/4-20, 15 LB.	1
12-	1307645GT	CONTACT ALARM WIRE ASSY, LARGE	1
12-	1278368GT	GRIP, CABLE	1
12-	1261184GT	NUT,1/4-20,8,ZAG	1
13	1310066GT	WELDMENT, RIGHT CONTACT ALARM, LARGE	1
14	1278982GT	DECAL, INSTRUCTION, ACTUATOR SWITCH SOCKET	1
15	1308384GT	ASSY, LIGHTS, 12/24 V CONTACT ALARM, AMBER	2
16	1261184GT	NUT,1/4-20,8,ZAG	1
17	1274322GT	NUT,NYLOCK FLG,3/8-16,F,ZAG	4
18	1251600GT	U-BOLT, FLATTENED, 1.5DIA. X 3/8 UNC,ZAG	2
19	1310064GT	WELDMENT, LEFT CONTACT ALARM, LARGE	1

923.1 Positive Air Shut off

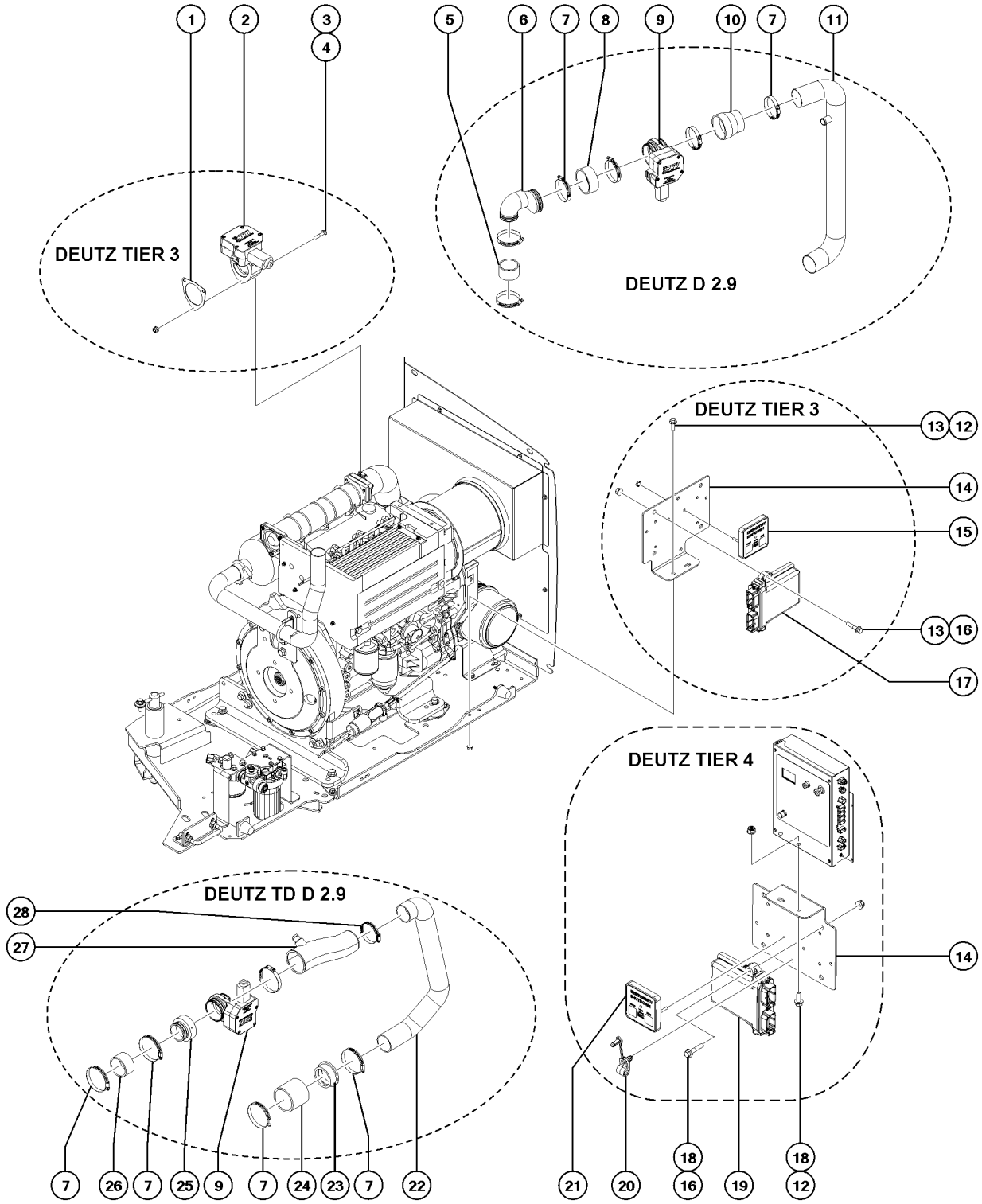

Item	Part No.	Description	Qty.
-		KIT, PASS, DEUTZ TD2.9, S60/65, Z62 Deutz TD D2.9 (Kits are no longer offered. Buy individual parts. Reach out to customer service for installation instructions.)	
-	6146GT	WASHER,FLAT,MS,#10,Y	
-	1251757GT	SCREW,PHPM,10-32X.50,ZAG	
-	1290849GT	HARNESS, CONTROL, PASS	1
-	18666GT	CLAMP,1.00,#16 X 1/4,RUB CUSH	3
		DEUTZ TIER 3	
1	128079GT	GASKET, DEUTZ 2011 INTAKE	1
2	1264497GT	VALVE, PAS, DEUTZ L03I	1
3	1255763GT	SCREW,HHF,5/16-18X1.5,8,ZAG	3
4	824028GT	NUT,TL FLG,5/16-18,G,ZAG	3
5	1289609GT	HOSE, AIR INTAKE SILICONE	1
6	1289535GT	NOZZLE, DTI PASS 90 D2.9	1
7	30971GT	CLAMP,HOSE,3.00"	
8	1289610GT	HOSE, INTAKE SILICONE 2.25	1
9	1289536GT	VALVE, PASS DEUTZ T4	1
10	1289767GT	HOSE, REDUCER, 2.50" TO 3" INLET, DEUTZ 2.9L	1
11	1289611GT	WELDMENT, STEEL INTAKE TUBE	1
12	824078GT	SCREW,HHF,1/4-20X.75,8,ZAG	
13	824027GT	NUT, TL FLG, 1/4-20, G, ZAG	
14	1264229GT	BRACKET, POSITIVE AIR SHUTOFF	1
15	1264499GT	CONTROLLER, DASH, BASIC PLUS	1
16	824080GT	SCREW, HHF, 1/4-20 X 1.25, 8, ZAG	2
17	1264498GT	CONTROLLER, VCU, DEUTZ L03I	1
18	1277924GT	NUT,NYLOCK FLG,1/4-20,F,ZAG	4
19	1291573GT	CONTROLLER, VCU, DEUTZ 2.9	1
20	219508GT	CLAMP, FIXED DIA, NYLON, 3/8"	1
21	1290107GT	HARNESS, MODULE, ESTOP, PASS	1
22	1289851GT	PASS INTAKE S60 TD2.9	1
23	101640GT	REDUCER,RUBBER 3.0 - 2.5	1

923.1 Positive Air Shut off

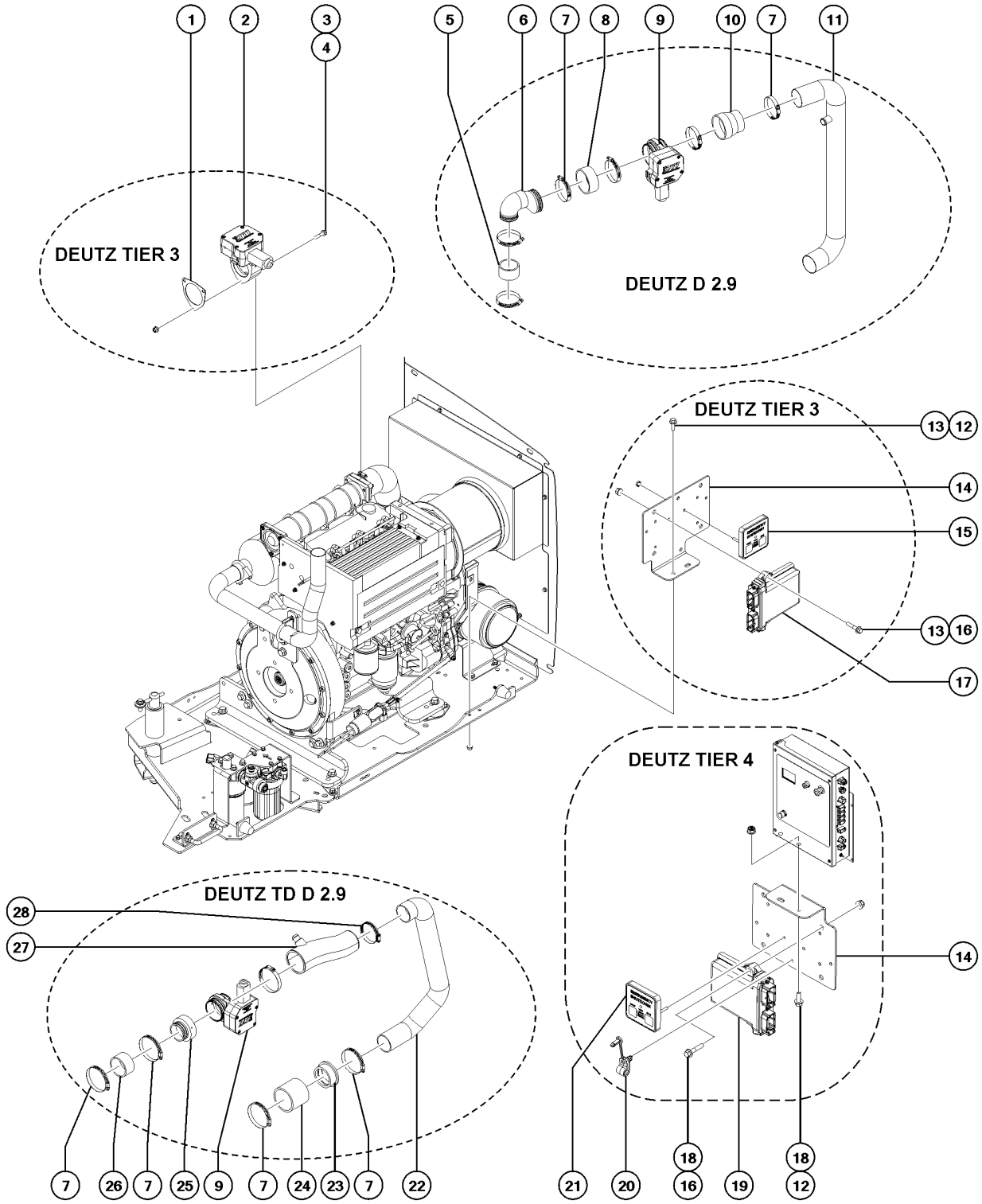

Item	Part No.	Description	Qty.
24	106211-300GT	HOSE,RUBBER 3"ID X .25 BLACK	1
25	1289837GT	NOZZLE 3" TO 2.5"	1
26	1289823GT	HOSE, INTAKE SILICONE 2.5" ID X 1.54" LG	1
27	1289852GT	PASS INTAKE S80 TD2.9	1
28	45435GT	CLAMP,HOSE,2.50"	1

924.1 Remote Charging

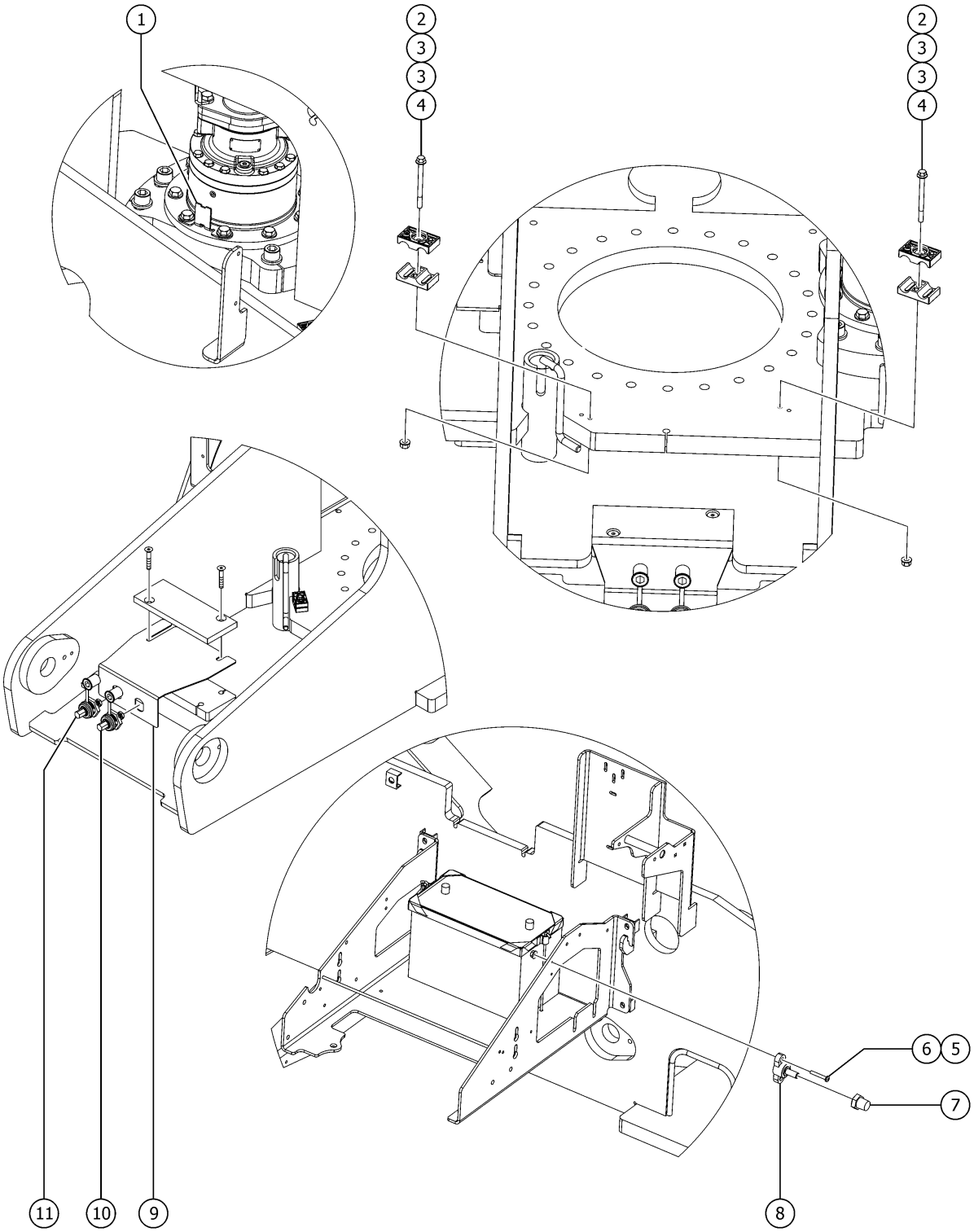

Item	Part No.	Description	Qty.
1	1262678GT	FORMING,HOSE GUIDE	1
2	824084GT	SCREW,HHF,1/4-20X3,8,ZAG	2
3	78736GT	CLAMP,2 HOSE,PLASTIC	4
4	824027GT	NUT, TL FLG, 1/4-20, G, ZAG	2
5	825352GT	SCREW,PHPM,10-32X1.25,ZAG	2
6	824032GT	NUT, TL FLG, 10-32, F, ZAG	2
7	1270131GT	TERMINAL, 3/8-16 STUD TO POST	1
8	94981GT	STUD,POWER 3/8" RED	1
9	1269546GT	FORMING, CHARGING LUG BRACKET	1
10	1270310GT	JUMPER TRMNL, BLACK, 3/8" POST	1
11	1270309GT	JUMPER TRMNL, RED, 3/8" POST	1

925.1 Telematics Option

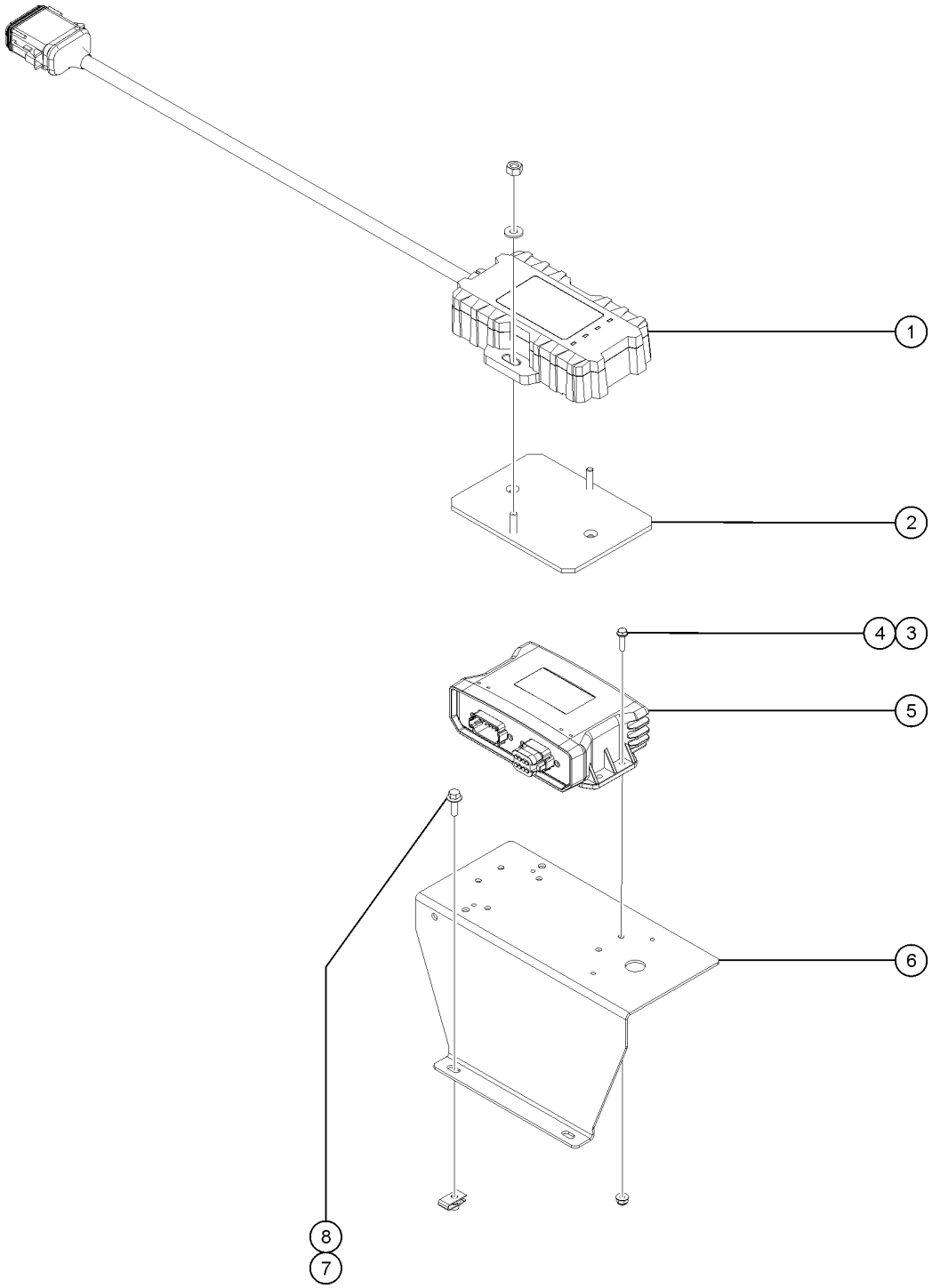

Item	Part No.	Description	Qty.
-	1292198GT	HARNESS, RETROFIT, M7 for first time insulation, must order this Harness with one of the models 1289520GT, 1289521GT, 1289522GT, or 1289523GT	1
-	1260526GT	HARNESS,TELEMATICS,TOPCON,36IN (to SN S65XCH-45353) (US & ACME)	1
-	1294289GT	HARNESS, TELEMATICS, TOPCON, 17IN (from SN S65XCH-45354) (US & ACME)	1
-	1256074GT	HARNESS, HERTZ GPS, 8" (to SN S65XCH-45353) (hertz)	1
-	1292346GT	HARNESS,HERTZ GPS,8" (from SN S65XCH-45354) (hertz)	1
1	1289520GT	MODULE, TELEMATICS, ZTR, M7, NORTH AMERICA North America	1
1B	1289521GT	MODULE, TELEMATICS, ZTR, M7, EMEA/APAC EMEA/APAC	
1C	1289522GT	MODULE, TELEMATICS, ZTR, M7, APAC/ANZ APAC/ANZ	
1D	1289523GT	MODULE,TELEMATICS,ZTR,M7,JAPAN Japan	
2	1289561GT	BRACKET, TELEMATICS	1
3	1262031GT	SCREW,HHF,10-24X.75,ZAG (from SN S65XCH-45354)	4
4	1283004GT	NUT,NYLOCK FLG,10-24,A,ZAG (from SN S65XCH-45354)	4
5	1272326GT	KIT,ZTR,M8 (from SN S65XCH-45354)	1
6	1281149GT	FORMING,TELEMATICS MOUNT (from SN S65XCH-45354)	1
7	824078GT	SCREW,HHF,1/4-20X.75,8,ZAG (from SN S65XCH-45354)	2
8	56912GT	SPRING CLIP,1/4-20,.025-.15X.54,ZAG (from SN S65XCH-45354)	2

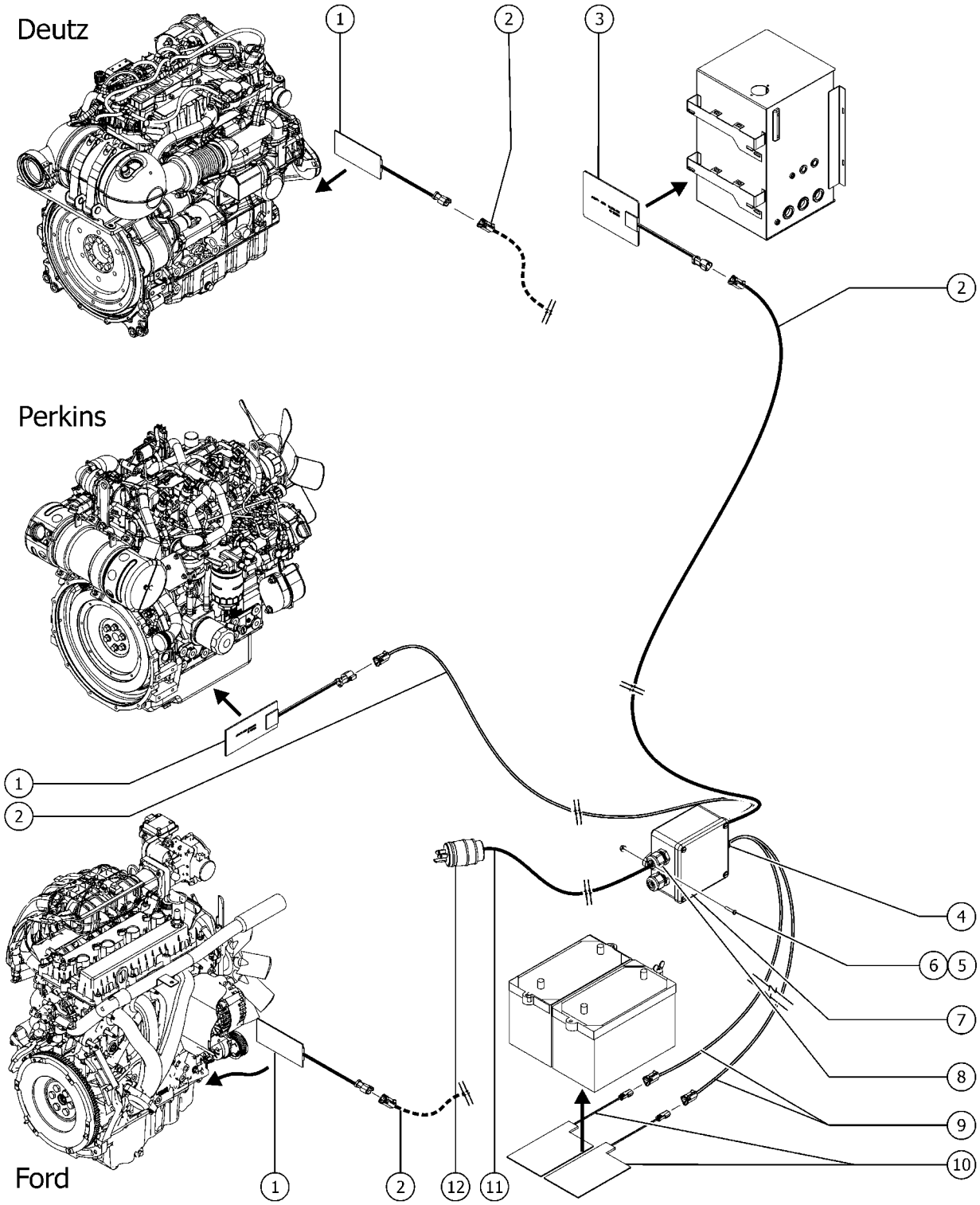
Deutz
1
2
3
2
Perkins
1
2
4
6
5
7
8
9
10
Ford
1
2
12
11

Item	Part No.	Description	Qty.
1	216615GT	ASSY HEATER, MODEL 18, 120V (120V)	1
1A-	119066GT	CONN, RECEP, 3 WAY, DEUTSCH, DT, ENDCAP	
1A-	60441GT	CONN, RECEP, 3 WAY, DEUTSCH, DT, LOCK	
1A-	216616GT	ASSY HEATER,MODEL 18,240V (240V)	1
1B-	119066GT	CONN, RECEP, 3 WAY, DEUTSCH, DT, ENDCAP	
1B-	60441GT	CONN, RECEP, 3 WAY, DEUTSCH, DT, LOCK	
2	216662GT	HARNESS,ENG/HYD HEATER,120V (120V)	1
2A-	101199-200GT	SHRINK TUBE,BLACK,RHW,1/2,3:1	
2A-	119057GT	CONN, PLUG, 3 WAY, DEUTSCH, DT, ENDCAP	
2A-	60427GT	CONN, PLUG, 3 WAY, DEUTSCH, DT, LOCK	
2A-	216683GT	HARNESS,ENG/HYD HEATER,240V (240V)	1
2B-	101199-200GT	SHRINK TUBE,BLACK,RHW,1/2,3:1	
2B-	119057GT	CONN, PLUG, 3 WAY, DEUTSCH, DT, ENDCAP	
2B-	60427GT	CONN, PLUG, 3 WAY, DEUTSCH, DT, LOCK	
3	216612GT	ASSY,120V HEATER, HYD TANK (120V)	1
3A-	119066GT	CONN, RECEP, 3 WAY, DEUTSCH, DT, ENDCAP	
3A-	60441GT	CONN, RECEP, 3 WAY, DEUTSCH, DT, LOCK	
3B	216611GT	ASSY,240V HEATER, HYD TANK (240V)	1
3B-	119066GT	CONN, RECEP, 3 WAY, DEUTSCH, DT, ENDCAP	
3B-	60441GT	CONN, RECEP, 3 WAY, DEUTSCH, DT, LOCK	
4	99778GT	CABLE SQUEEZE CONN,4 WIRE	2
5	826516GT	SCREW, PHPM, 10-32 X 1.0, ZAG	
6	824032GT	NUT, TL FLG, 10-32, F, ZAG	
7	214249GT	COLD WEATHER 120V J BOX ASSY (120V)	1
7B	237711GT	COLD WEATHER 240V J BOX ASSY (240V)	1
8	214536GT	SQUEEZE CONN W/NUT, 2WIRE, 4MM	1
9	216655GT	HARNESS,BATT CABLE,120V (120V)	
9A-	101199-200GT	SHRINK TUBE,BLACK,RHW,1/2,3:1	

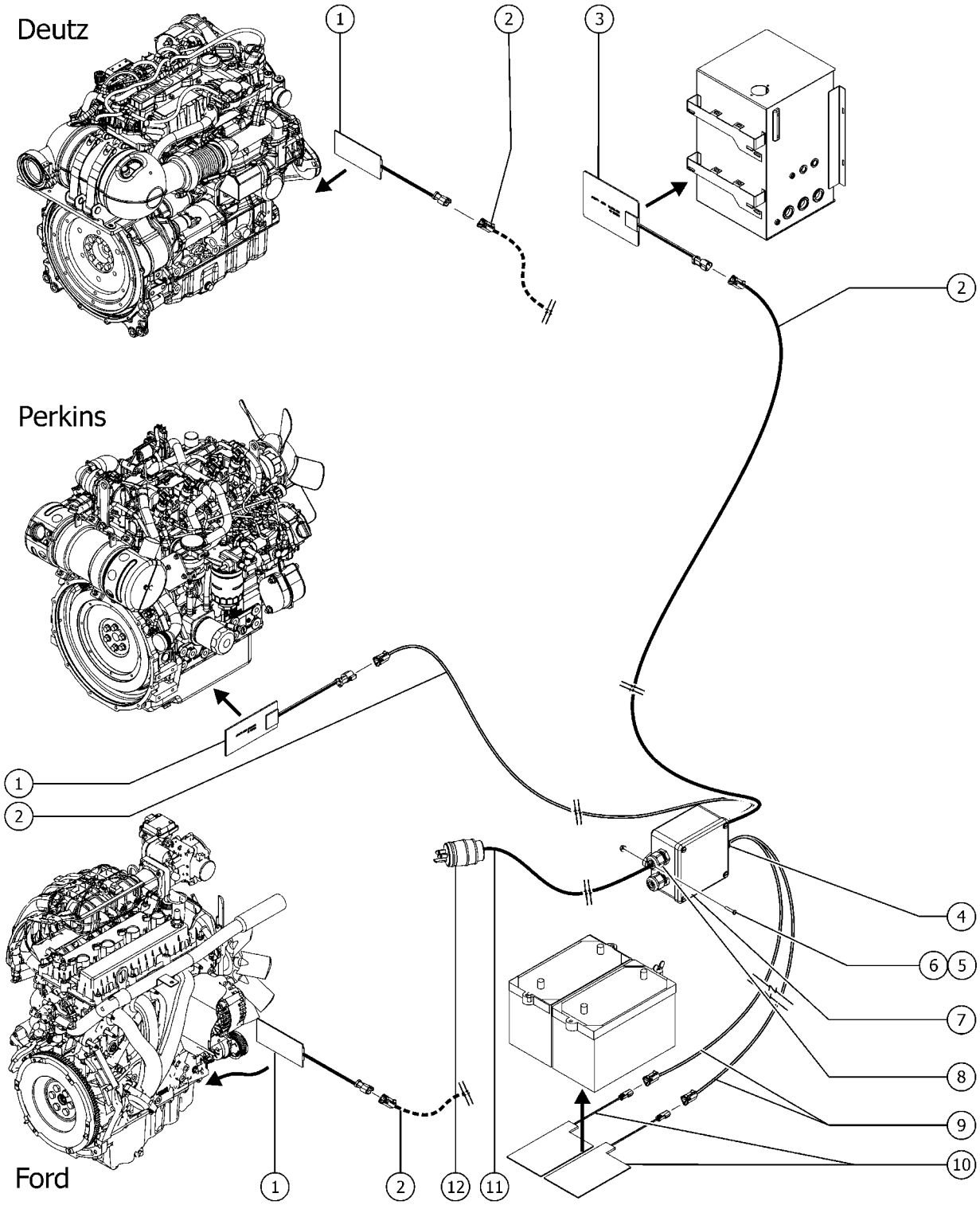
Deutz
1
2
3
2
Perkins
1
2
4
6
5
7
8
9
10
Ford
1
2
12
11

Item	Part No.	Description	Qty.
9A-	119056GT	CONN, PLUG, 2 WAY, DEUTSCH, DT, ENDCAP	
9A-	60425GT	CONN, PLUG, 2 WAY, DEUTSCH, DT, LOCK	
9B-	216676GT	HARNESS,BATT CABLE,240V (240V)	
9B-	101199-200GT	SHRINK TUBE,BLACK,RHW,1/2,3:1	
9B-	119056GT	CONN, PLUG, 2 WAY, DEUTSCH, DT, ENDCAP	
9B-	60425GT	CONN, PLUG, 2 WAY, DEUTSCH, DT, LOCK	
10	216617GT	ASSY, BATTERY HEATER, 120V (120V)	
10A-	119065GT	CONN, RECEP, 2 WAY, DEUTSCH, DT	
10A-	60439GT	CONN, RECEP, 2 WAY, DEUTSCH, DT, LOCK	
10B	216618GT	ASSY BATTERY HEATER,240V (240V)	
10B-	119065GT	CONN, RECEP, 2 WAY, DEUTSCH, DT	
10B-	60439GT	CONN, RECEP, 2 WAY, DEUTSCH, DT, LOCK	
11	216606GT	HARNESS, 120V POWER CORD, 24" (120V) models includes items 8 and 12	1
11A-	101199-200GT	SHRINK TUBE,BLACK,RHW,1/2,3:1	
11B	216607GT	HARNESS, 240V POWER CORD, 24" (240V) models includes item 8	1
11B-	101199-200GT	SHRINK TUBE,BLACK,RHW,1/2,3:1	
12	119403GT	CONN,PLUG 120 AC/15A DOMESTIC	1

927.1 Lift Tools Expo Installer

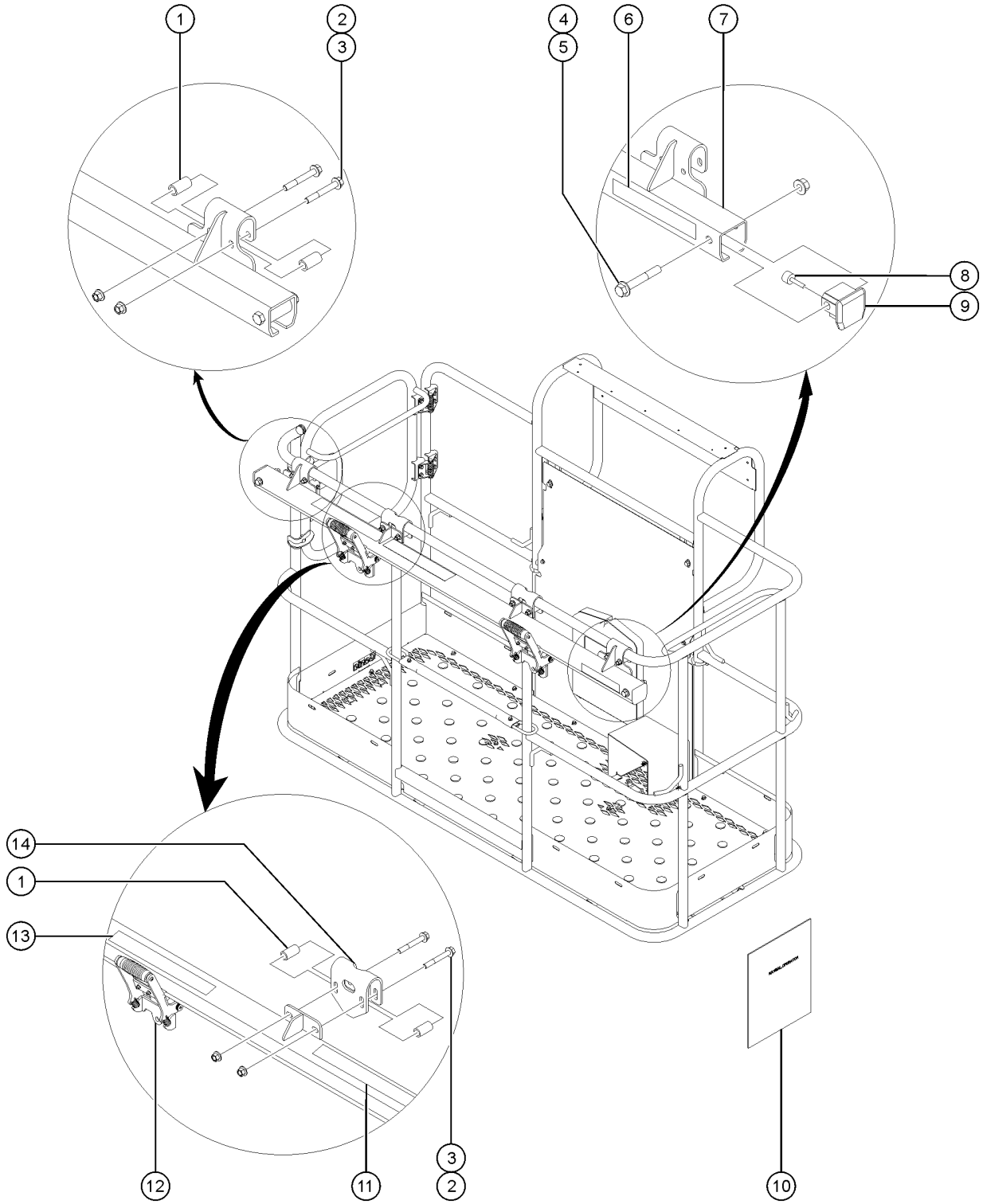

Item	Part No.	Description	Qty.
-	1285719GT	ACC, EXPO INSTALLER, 6FT, WORD (complete kit) 6' Platform with Word decals	
-	1288801GT	ACC, EXPO INSTALLER, 8FT, WORD (complete kit) 8' Platform with Word decals	
-	1286618GT	ACC, EXPO INSTALLER, 6FT, SYM (complete kit) 6' Platform with Symbol decals	
-	1288803GT	ACC, EXPO INSTALLER, 8FT, SYM (complete kit) 8' Platform with Symbol decals	
1	1256481GT	SPACER, HANGER BRACKET	8
2	1256856GT	SCREW,HHF,3/8-16X2.5,8,ZAG Torque to 44 ft-lbs/60 Nm	8
3	1274322GT	NUT,NYLOCK FLG,3/8-16,F,ZAG	8
4	1256851GT	SCREW,HHF,1/2-13X3.5,8,ZAG Tighten until snug. Do not over tighten.	2
5	1251997GT	NUT,TL FLG,1/2-13,G,ZAG	2
6	1286393GT	DECAL, BRANDING, EXPO INSTALLER	1
7	1286620GT	WELDMENT, EXPO INSTALLER TRACK, 6FT	1
7B	1288805GT	WELDMENT, EXPO INSTALLER TRACK, 8FT	
8	36388GT	BUMPER,RUBBER,.75 X .50H,STUD	2
9	1260892GT	END STOP. TFAAS TRACK	2
10	1286259GT	SUPPLEMENT,LIFT TOOLS EXPO INSTALLER	1
11	1286261GT	DECAL,MAX SIDE FORCE, LTEI ,WRDS models with Word decals	1
11B	1286263GT	DECAL,MAX MANUAL FORCE, LTEI ,SYMB models with Symbol decals	1
12	1285721GT	TROLLY,EXPO INSTALLER	1
12-	1289692GT	GRIP,CONTOURED ROUND for 1285721	1
12-	1289693GT	BRAKE, EXPO INSTALLER for 1285721	1
12-	1285730GT	SPRING, COMPRESSION, S/S for 1285721	2
13	1286260GT	DECAL,MAX CAPACITY, LTEI, WRDS models with Word decals	1
13B	1286262GT	DECAL,MAX CAPACITY, LTEI, SYMB models with Symbol decals	1
14	1286621GT	FORMING INNER HANGER, EXPO INSTALLER	2

928.1 2nd Battery Option

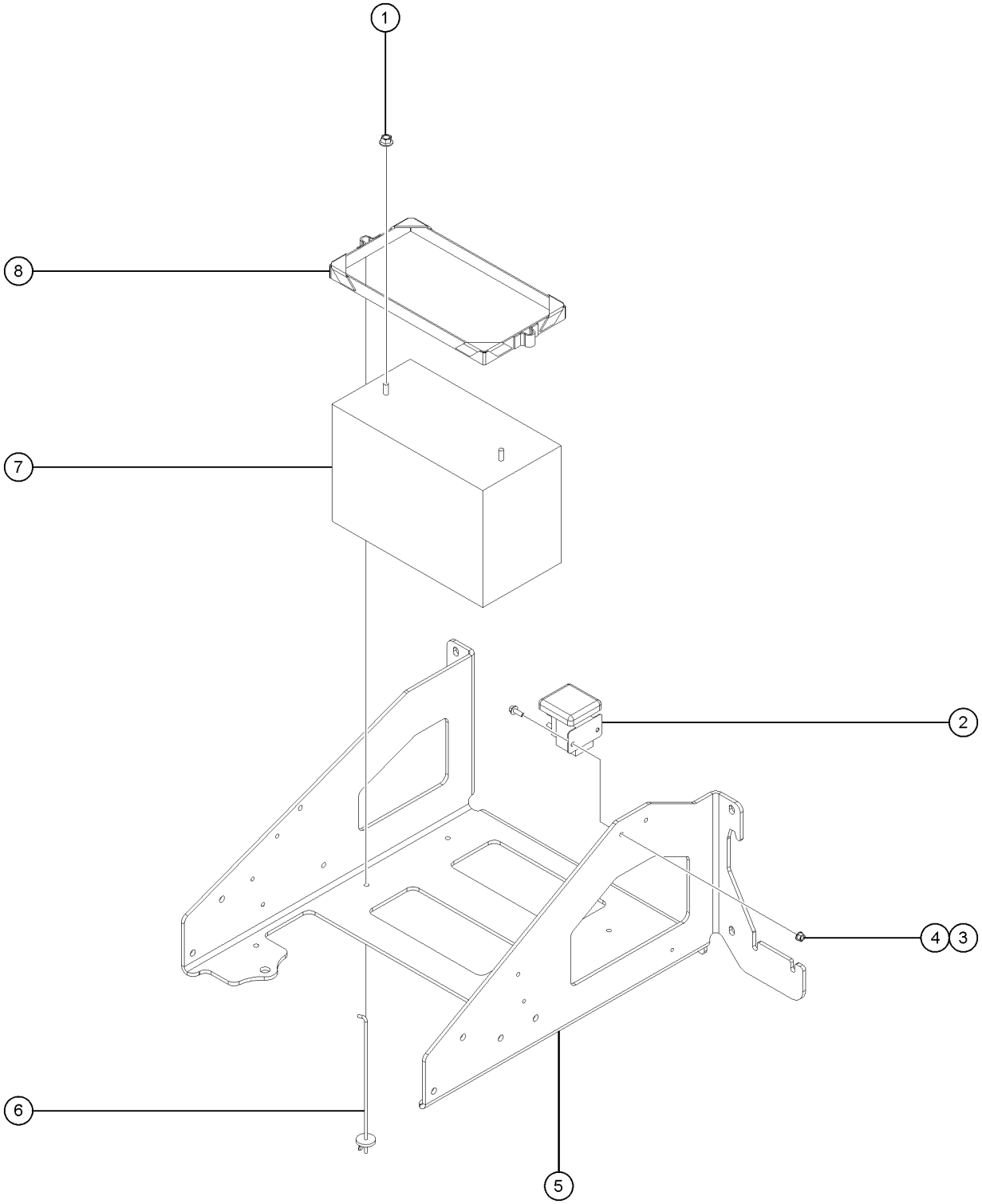

928.1 2nd Battery Option

Item	Part No.	Description	Qty.
1	824029GT	NUT, TL FLG, 3/8-16, G, ZAG	2
2	237068GT	SEPARATOR,DUAL BATTERY,100A	1
3	824027GT	NUT, TL FLG, 1/4-20, G, ZAG	2
4	824078GT	SCREW,HHF,1/4-20X.75,8,ZAG	2
5	77644GT	FORMING,BATTERY TRAY**	1
6	45708GT	HOOK,BATT HOLD DOWN,10"	2
7	1303585GT	BATTERY, 12V, 950CCA, FLA	2
8	30144GT	BATTERY HOLD DOWN,GROUP 31	1

929.1 Lift Tools Access Deck - 8 Feet (from SN S60XCH-45001)

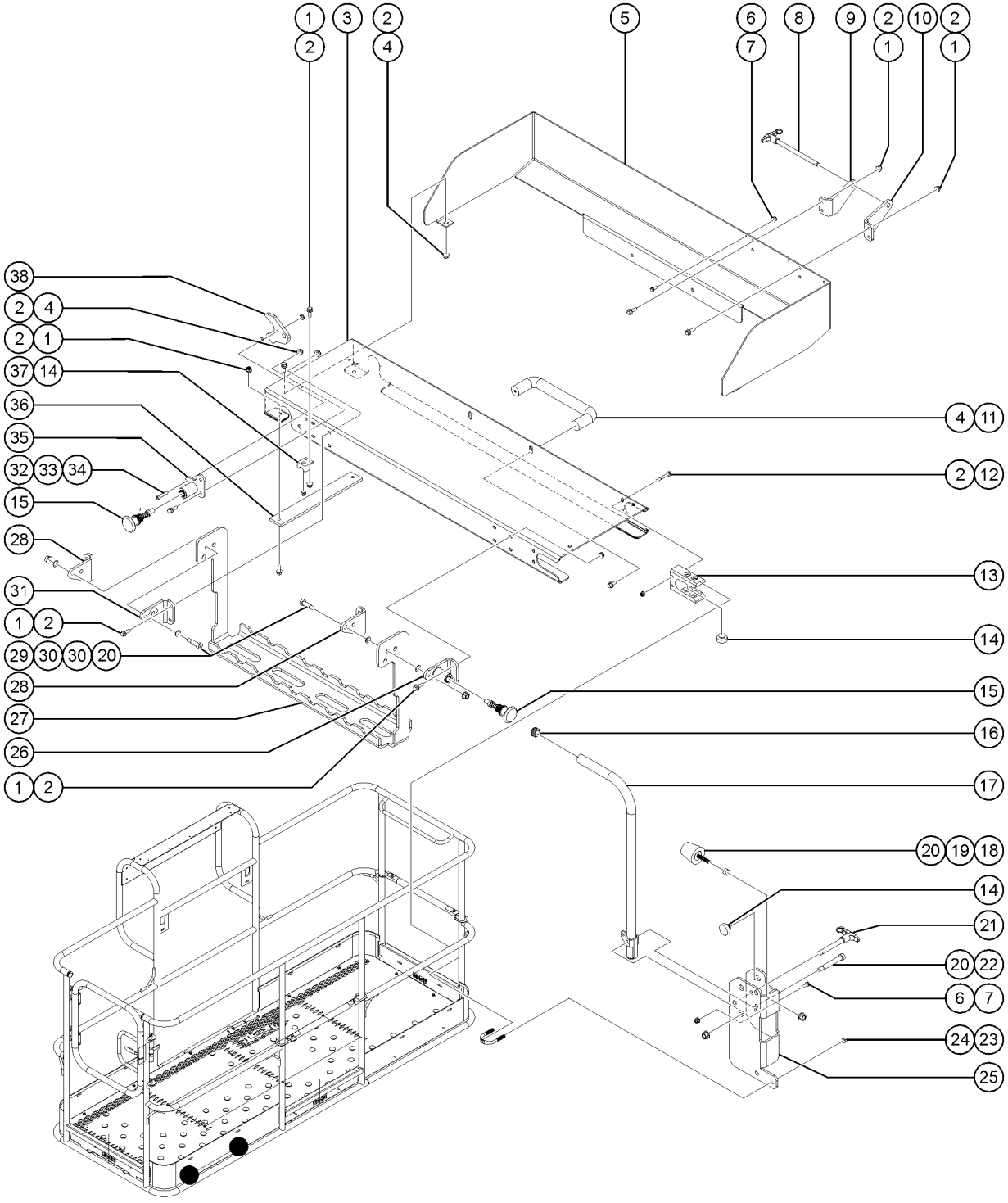

929.1 Lift Tools Access Deck - 8 Feet (from SN S60XCH-45001)

Item	Part No.	Description	Qty.
-	1291798GT	KIT, LIFT TOOLS ACCESS DECK, 8FT PLATFORM, ANSI	
1	824078GT	SCREW,HHF,1/4-20X.75,8,ZAG	20
2	1277924GT	NUT,NYLOCK FLG,1/4-20,F,ZAG	28
3	1291799GT	FORMING, ACCESS DECK	1
4	1256855	SCREW,HHF,1/4-20X.625,8,ZAG	6
5	1291800GT	FORMING, ACCESS DECK TOEBOARD, 8FT PLATFORM	1
6	1283004GT	NUT,NYLOCK FLG,10-24,A,ZAG	2
7	1270665GT	SCREW,HHF,10-24X.625,5,ZAG	2
8	1292956GT	PIN, QUICK RELEASE 3/8X5	1
8-	1292932GT	LANYARD, STEEL, 8",NYLON SLEEVE,#10	
9	1292937GT	FORMING, ACCESS DECK LEFT LOCK No longer available,(Replaced by 1292937P)	1
9B	1292937PGT	FORMING,ACCESS DECK LEFT LOCK,PTD	1
10	1292936GT	FORMING, ACCESS DECK RIGHT LOCK	1
11	1291802GT	FORMED, PULL HANDLE	1
12	1253485GT	SCREW,HHF,1/4-20X2,8,ZAG	4
13	1291812GT	WEAR PAD, HORIZANTAL MIDRAIL SLOT	2
14	43392GT	BUMPER,BATTERY BOX & RAILS	8
15	1291811GT	POP PIN, YELLOW	2
16	55753GT	BUMPER, PLASTIC, 1.25 O.D.	2
17	1291815GT	WELDMENT, FOLDING HANDLE	1
18	111580GT	BUMPER,RUBBER,1.19DX1.5X.31-18	1
19	1261250GT	NUT,5/16-18,8,ZAG	1
20	1274167GT	NUT,NYLOCK FLG,5/16-18,F,ZAG	4
21	1291865GT	PIN, QUICK RELEASE 3/8X2-1/2	1
21-	1292932GT	LANYARD, STEEL, 8",NYLON SLEEVE,#10	
22	1291817GT	BOLT,SHS,3/8X2.25X5/16-18,ZAG	1
23	1274322GT	NUT,NYLOCK FLG,3/8-16,F,ZAG	4
24	1251600GT	U-BOLT, FLATTENED, 1.5DIA. X 3/8 UNC,ZAG	2

929.1 Lift Tools Access Deck - 8 Feet (from SN S60XCH-45001)

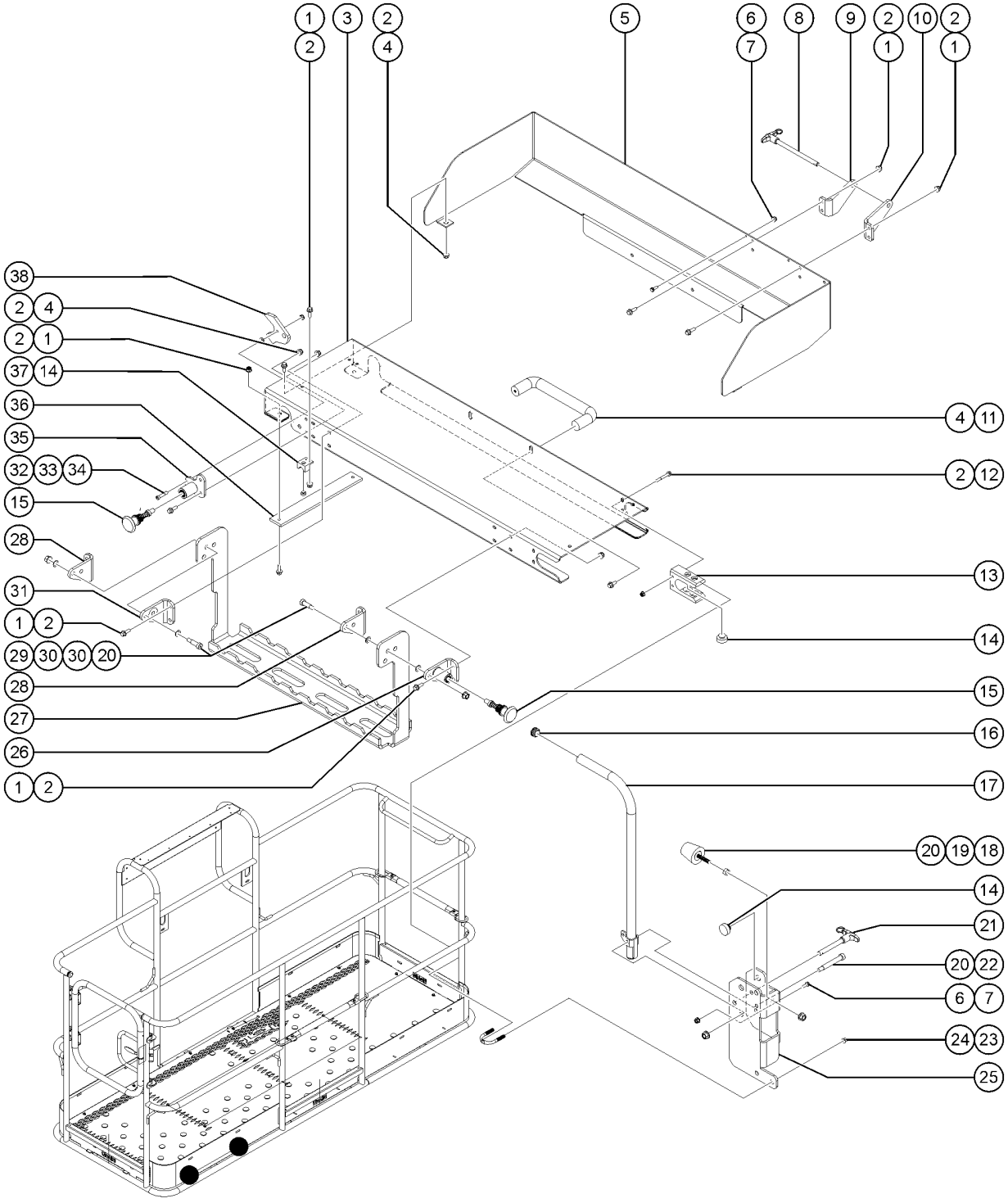

929.1 Lift Tools Access Deck - 8 Feet (from SN S60XCH-45001)

Item	Part No.	Description	Qty.
25	1293706GT	FORMING, ACCESS DECK HANDLE	1
26	1291844GT	WELDMENT, ACCESS DECK STEP LOCK	1
27	1291801GT	FORMING, ACCESS DECK STEP, 8FT PLATFORM	1
28	1291804GT	FORMING, ACCESS DECK LEFT EYE, 8FT PLATFORM	2
29	1291819GT	BOLT,SHS,3/8X7/8X5/16-18,ZAG	2
30	1292828GT	WASHER,FLAT,.39,.625,.036,ZAG	4
31	1291803GT	FORMING, ACCESS DECK RIGHT EYE, 8FT PLATFORM	1
32	1291818GT	BOLT,SHS,1/4X.75X1/4-20,ZAG	1
33	1291821GT	WASHER, FLAT, 1/4X1/16X1/2, AL	1
34	1283026GT	NUT,LP NYLOCK,1/4-20,2,ZAG	1
35	1291809GT	WELDMENT, LIFT TOOLS MIDRAIL LOCK	1
36	1291807GT	PLATE, STIFFENER BAR	2
37	1291813GT	WEAR PAD, VERTICAL MIDRAIL SLOT	2
38	1291806GT	PLATE, MIDRAIL HOOK	1

930.1 Lift Tools Access Deck - 6 Feet (from SN S60XCH-45001)

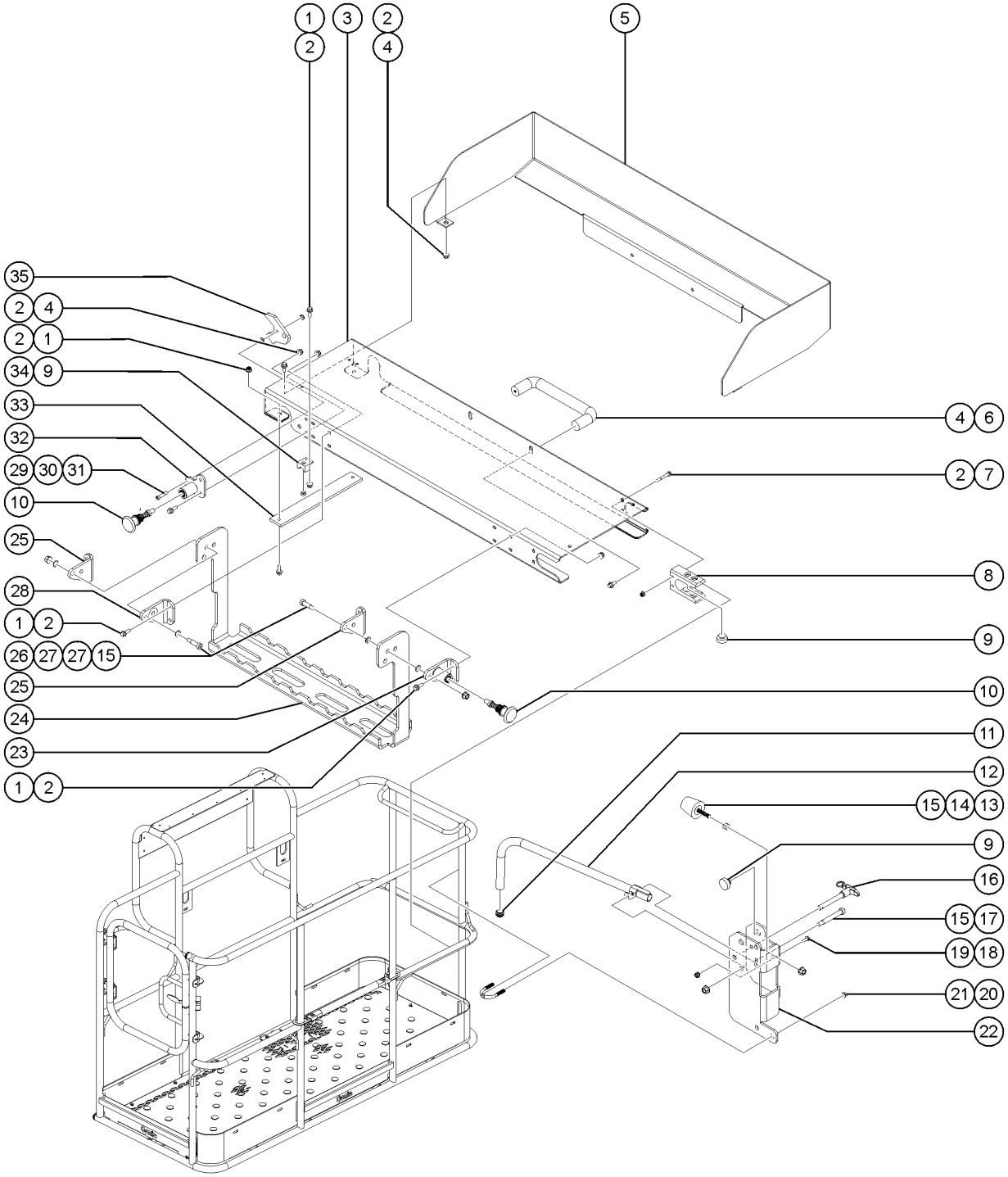

930.1 Lift Tools Access Deck - 6 Feet (from SN S60XCH-45001)

Item	Part No.	Description	Qty.
-	1293700GT	KIT, LIFT TOOLS ACCESS DECK, 6FT PLATFORM, ANSI (6 feet)	1
1	824078GT	SCREW,HHF,1/4-20X.75,8,ZAG	16
2	1277924GT	NUT,NYLOCK FLG,1/4-20,F,ZAG	24
3	1293710GT	FORMING, ACCESS DECK	1
4	1256855	SCREW,HHF,1/4-20X.625,8,ZAG	6
5	1293702GT	FORMING, ACCESS DECK TOEBOARD, 6FT PLATFORM	1
6	1291802GT	FORMED, PULL HANDLE	1
7	1253485GT	SCREW,HHF,1/4-20X2,8,ZAG	4
8	1291812GT	WEAR PAD, HORIZANTAL MIDRAIL SLOT	2
9	43392GT	BUMPER,BATTERY BOX & RAILS	8
10	1291811GT	POP PIN, YELLOW	2
11	55753GT	BUMPER, PLASTIC, 1.25 O.D.	2
12	1291815GT	WELDMENT, FOLDING HANDLE	1
13	111580GT	BUMPER,RUBBER,1.19DX1.5X.31-18	1
14	1261250GT	NUT,5/16-18,8,ZAG	1
15	1274167GT	NUT,NYLOCK FLG,5/16-18,F,ZAG	4
16	1291865GT	PIN, QUICK RELEASE 3/8X2-1/2	1
16-	1292932GT	LANYARD, STEEL, 8",NYLON SLEEVE,#10	
17	1291817GT	BOLT,SHS,3/8X2.25X5/16-18,ZAG	1
18	1270665GT	SCREW,HHF,10-24X.625,5,ZAG	1
19	1283004GT	NUT,NYLOCK FLG,10-24,A,ZAG	1
20	1274322GT	NUT,NYLOCK FLG,3/8-16,F,ZAG	4
21	1251600GT	U-BOLT, FLATTENED, 1.5DIA. X 3/8 UNC,ZAG	2
22	1293706GT	FORMING, ACCESS DECK HANDLE	1
23	1291844GT	WELDMENT, ACCESS DECK STEP LOCK	1
24	1293703GT	FORMING, ACCESS DECK STEP, 6FT PLATFORM	1
25	1291804GT	FORMING, ACCESS DECK LEFT EYE, 8FT PLATFORM	2
26	1291819GT	BOLT,SHS,3/8X7/8X5/16-18,ZAG	2

930.1 Lift Tools Access Deck - 6 Feet (from SN S60XCH-45001)

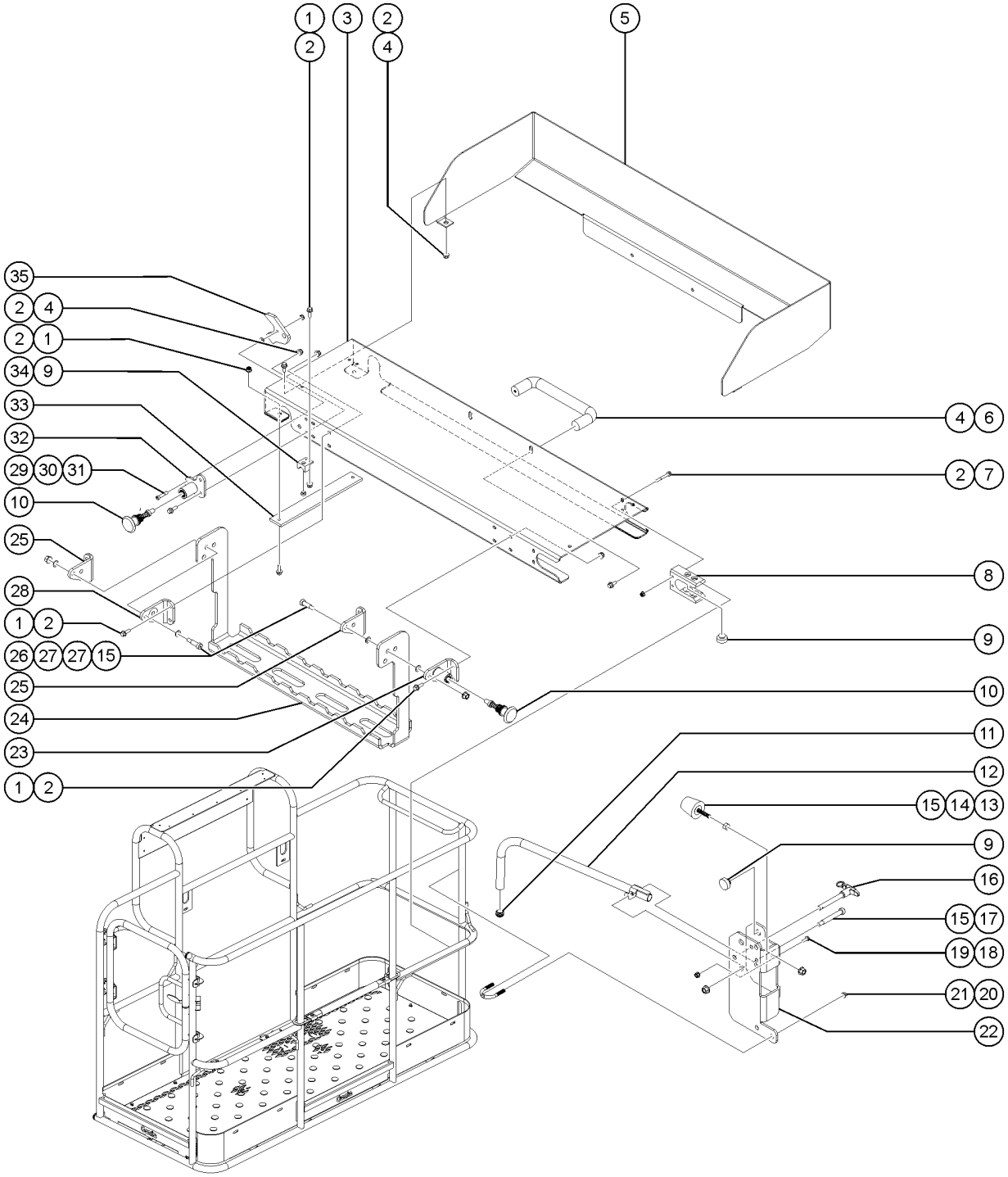

930.1 Lift Tools Access Deck - 6 Feet (from SN S60XCH-45001)

Item	Part No.	Description	Qty.
27	1292828GT	WASHER,FLAT,.39,.625,.036,ZAG	4
28	1291803GT	FORMING, ACCESS DECK RIGHT EYE, 8FT PLATFORM	1
29	1291818GT	BOLT,SHS,1/4X.75X1/4-20,ZAG	1
30	1291821GT	WASHER, FLAT, 1/4X1/16X1/2, AL	1
31	1283026GT	NUT,LP NYLOCK,1/4-20,2,ZAG	1
32	1291809GT	WELDMENT, LIFT TOOLS MIDRAIL LOCK	1
33	1293704GT	PLATE, STIFFENER BAR	2
34	1291813GT	WEAR PAD, VERTICAL MIDRAIL SLOT	2
35	1291806GT	PLATE, MIDRAIL HOOK	1

931.1 Quickfit Oil Change System Ready (from SN S65XCH-48164)

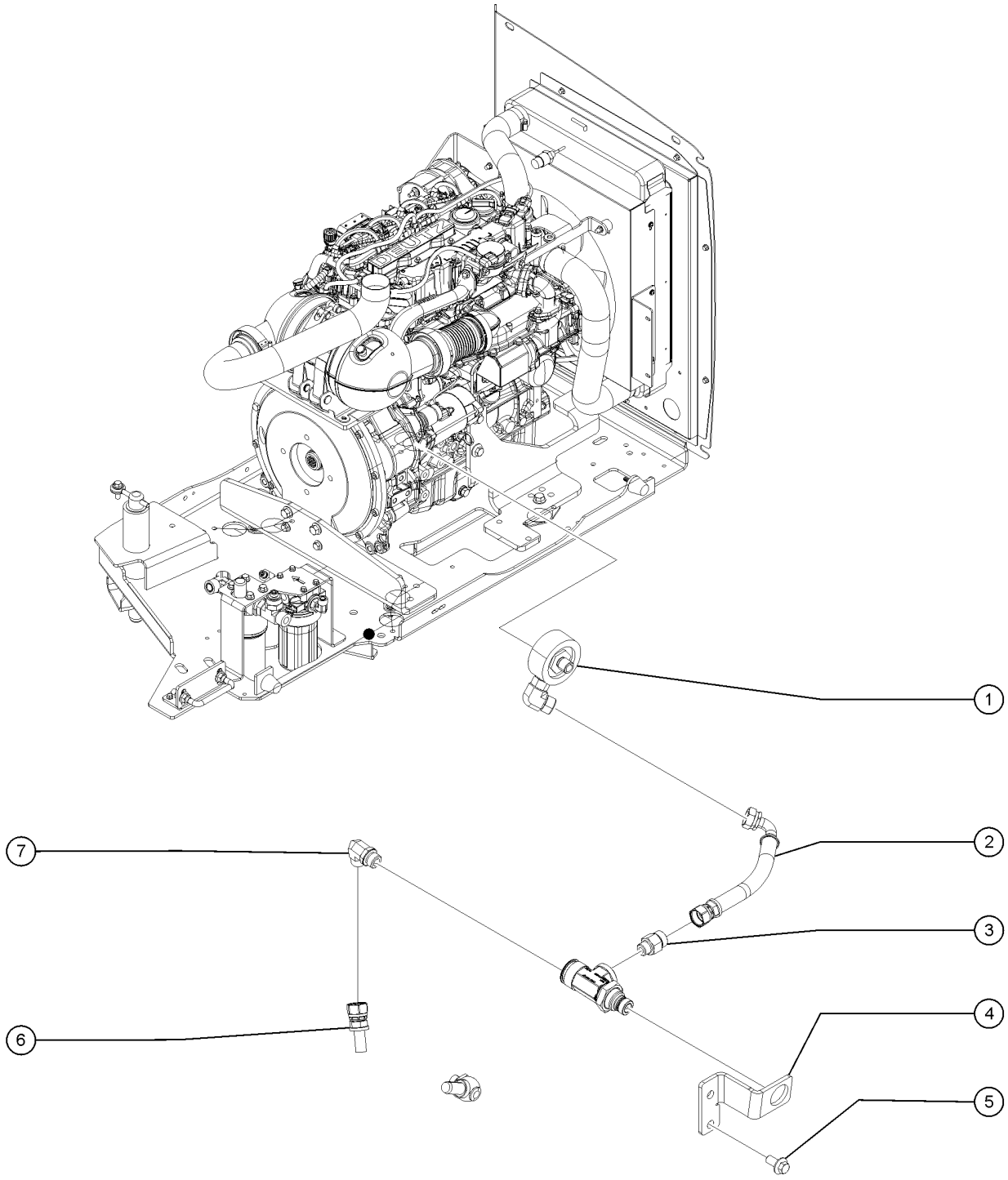

931.1 Quickfit Oil Change System Ready (from SN S65XCH-48164)

Item	*Part No.*	*Description*	*Qty.*
1	1313118GT	RPM QUICKFIT KIT	1
2	1310911-950GT	ASSY, HOSE, OIL, -10, 300, STR, 90, 9.50 IN	1
3	56604GT	CONN,520120-10-8	1
4	1310898GT	BRACKET, QUICKFIT, OFFSET, 8 DOWN	1
5	231087GT	SCREW,HHF,M12-1.75X25,DIN6921,10.9,ZAB	2
6	1310910-975GT	ASSY, HOSE, OIL, -10, 300, STR, BANJO, 9.75 IN	1
7	48950GT	ELBOW,90D,520220-10	1

932.1 Lift Guard White Noise Alarm

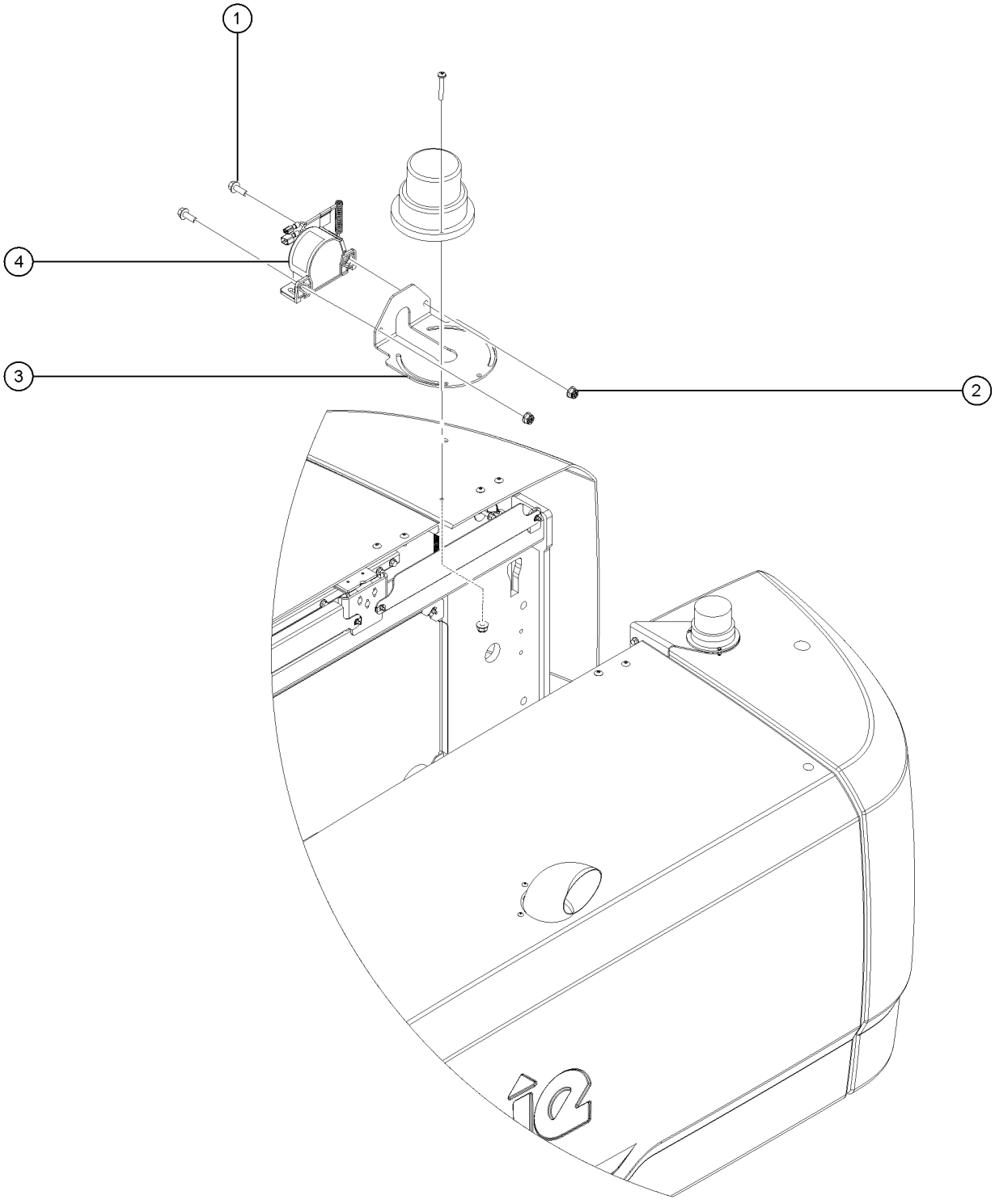

Item	*Part No.*	*Description*	*Qty.*
A	1318185GT	HARNESS, WHITE NOISE ALARM, ALC600-XC	1
1	824078GT	SCREW,HHF,1/4-20X.75,8,ZAG	2
2	1277924GT	NUT,NYLOCK FLG,1/4-20,F,ZAG	2
3	1316333GT	BRACKET, WHITE NOISE ALARM, BOOMS	1
4	1315359GT	ASSEMBLY, ALARM, WHITE NOISE, 97dB	1

933.1 Access Manager Option

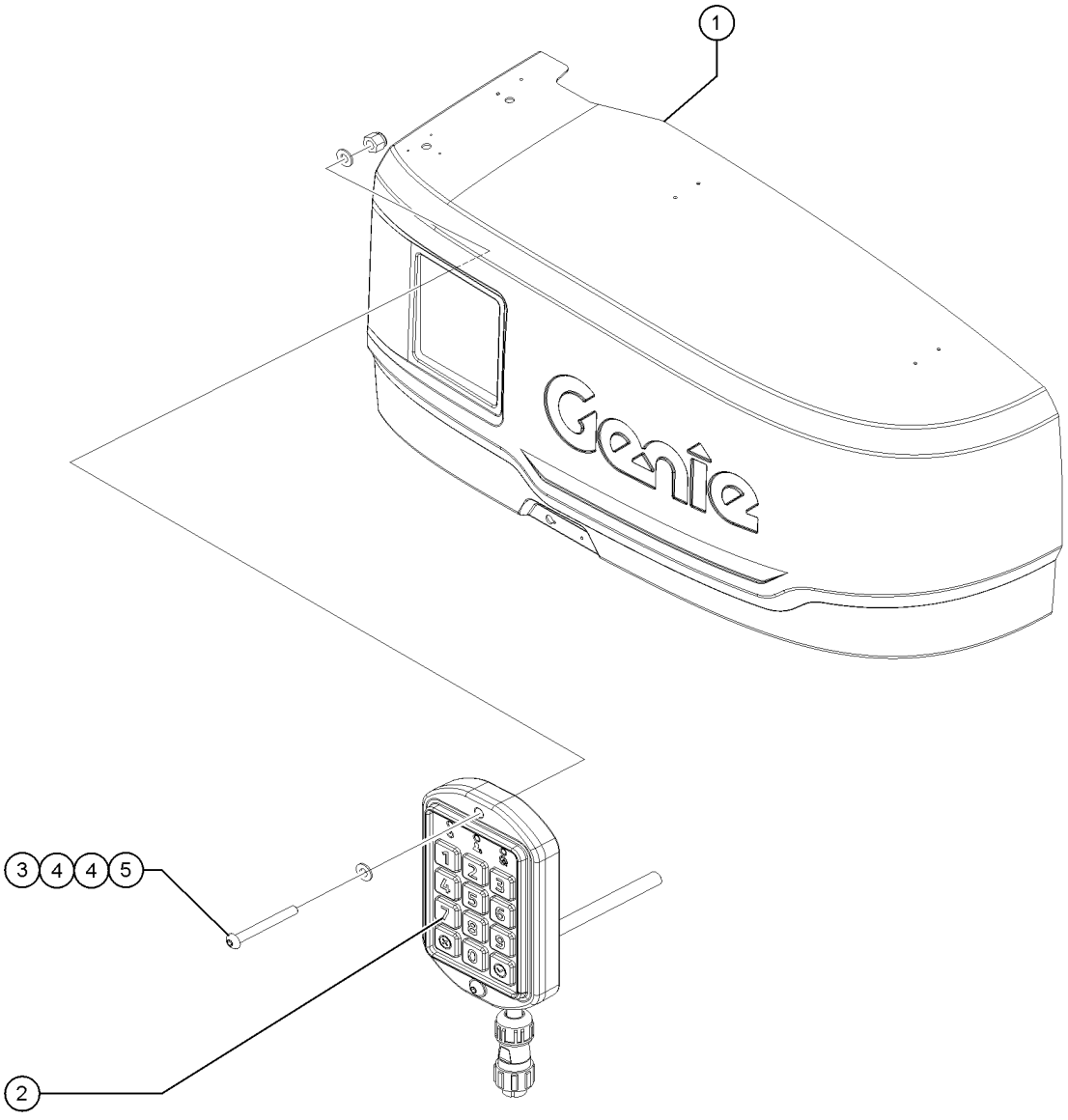

933.1 Access Manager Option

Item	*Part No.*	*Description*	*Qty.*
A	1296897GT	HARNESS, ACCESS MANAGEMENT, 164"	1
B	1273629GT	WIRE CLAMP, ADHESIVE, ADJUSTABLE, 7/16"	6
1		Ref. Cover, Tank Side (refer to 308.1)	
2	1296895GT	KEYPAD, ACCESS MANAGEMENT, LIFT CONNECT	1
3	1300832GT	SCREW, BHC, M4-0.7X35, 10.9,ZAB	2
4	825357GT	WASHER,FLAT,M4,DIN125,ZAB	4
5	1283019GT	NUT,NYLOCK,M4-0.7,DIN985,8,ZAB	2

Part no.	Page Number
1268GT	13
1484GT	13
1487GT	423
1488GT	423
1702GT	265
5224GT	363
5365GT	243
5397GT	249, 437
6037GT	437
6095GT	55
6097GT	363
6146GT	271, 465
6178GT	271, 295, 311, 347, 349. 437
6653GT	315, 329
6782GT	249
6833GT	89, 269, 353, 385, 417, 421
6888GT	249
7056GT	445
7057GT	425
7713GT	363
8149GT	81
8170GT	77
8177GT	55
8910GT	75
9599-SGT	407
10775GT	445
10777GT	425
12344GT	437, 459
12448GT	379
13000GT	437
13268GT	295, 311, 385, 441
13585GT	425
13597GT	243
13635-10GT	359
18396GT	363, 369
18665GT	439
18666GT	97, 385, 465
18720GT	343, 345, 351
18722GT	345
19018-1100GT	411
19273GT	309
19274GT	459
19358GT	265
19491GT	99, 347
20776GT	439
20973GT	117, 137, 141, 143, 161. 163...
21130GT	243, 271, 325
21465GT	267, 269, 291, 295, 297. 309...
21618GT	417, 421
22348GT	87
22571GT	337, 405
22672GT	285, 303, 315, 327, 431
22699GT	289
23405GT	431
24038GT	267, 285, 303, 315, 329
24514GT	379
25282GT	455
25548GT	289, 307
25817GT	49, 53, 55
25994GT	19
27067GT	53, 57, 65, 67
27082GT	335
27204GT	23, 39
27206GT	23, 39
27207GT	23, 39
27391GT	133, 417, 421
27497GT	91
27581GT	13
27802GT	219, 225
27807GT	221, 227
27901GT	87
28158GT	19, 35
28159GT	19, 35
28160GT	19, 35
28174GT	27, 31, 43, 47
28235GT	27, 31, 43, 47
28236GT	31
28301GT	107, 111
28646GT	77
28750GT	13, 217, 229
29104GT	23
29261GT	417, 421
29557GT	279, 281, 299
29559GT	279
29560GT	15, 243, 279
29868GT	75, 85, 101, 309, 355, 373...
30143GT	75
30144GT	75, 479
30220GT	367
30222GT	365
30348GT	287, 291
30468GT	433
30489GT	275, 307
30810GT	243, 271, 279
30971GT	247, 307, 319, 431, 465
30996GT	93
30997GT	95, 385
31060GT	19, 29, 31
31099GT	239, 241
31408GT	247
31523GT	243
31788GT	19
31983GT	291, 309
32064GT	259
32150GT	13
32151GT	13
32309GT	255
32698GT	15
33277GT	337
33428GT	365
33555GT	105, 109
33576GT	139
33674GT	423
33994GT	13, 217, 229
33998GT	219, 227
34162-300GT	287
34162-0400GT	435
34164GT	435
34344GT	339
34619GT	433
34922GT	431
34940GT	87
34955GT	431, 435
34959GT	435
35434GT	285, 287, 305, 327, 331. 333...
35586GT	247

Part no.	Page Number
35675GT	341
35956GT	415
36208GT	267
36388GT	457, 477
36456GT	69, 265
37187GT	81
37192GT	81
37947GT	107, 109
38149GT	19
38621GT	339
38922GT	335
39518GT	317
39540GT	93, 385
39908GT	141, 151
40434GT	457
40766GT	385
42014GT	55, 57, 343
42079GT	373
42104GT	423
42787GT	81, 395
43018GT	235
43392GT	381, 423, 433, 481, 485
43683GT	233
44174GT	235
44981GT	27, 31, 43, 47
45074GT	53
45435GT	259, 287, 307, 319, 331. 435...
45454GT	303
45455GT	287
45708GT	77, 479
46131GT	265, 295
46137GT	23
46139GT	19
46188GT	417
47025GT	455
47041GT	23
47232GT	381
48425GT	339
48498GT	265
48647GT	223
48731GT	23
48767GT	389, 391
48875GT	389, 391, 455
48878GT	75, 81, 395
48880GT	237, 389, 391, 399
48885GT	77, 397
48898GT	397
48904GT	389, 391, 395, 397
48905GT	389, 391, 393, 397, 399
48907GT	389, 391
48908GT	399
48911GT	399
48912GT	75, 391, 393, 399, 403, 455
48915GT	391, 395, 399, 449
48916GT	389, 391, 395, 399, 403
48918GT	399
48927GT	391
48929GT	403, 449
48930GT	395, 399
48932GT	339, 395, 403
48933GT	389, 391, 399, 403
48936GT	339, 395, 399
48937GT	389, 391
48941GT	339, 397
48943GT	77, 395, 401
48946GT	395
48948GT	399
48950GT	489
48959GT	75, 395, 449
48960GT	395, 399, 449
48961GT	339, 395
48963GT	341, 395
48974GT	449
48975GT	395
48976GT	397
48977GT	395
48984GT	77, 395, 449
48996GT	77, 395
48997GT	237, 389, 391, 399
48998GT	219
49000GT	91, 453
49117-2913GT	393
49117-6091GT	399
49117-6291GT	399
49117-7480GT	393
49117-8858GT	393
49117-10091GT	399
49117-10691GT	399
49119-2878GT	391
49119-4878GT	391
49119-6890GT	393
49119-7283GT	393
49119-7480GT	393
49119-7578GT	399
49120-7131GT	455
49128-3291GT	403
49128-6299GT	393
49128-12309GT	389, 391
49130-2482GT	399
49130-5118GT	399
49130-5591GT	403
49130-5782GT	393
49130-5906GT	393
49130-9843GT	449
49130-81417GT	391
49131-9603GT	399
49143-3429GT	393
49143-3629GT	393
49143-12329GT	389, 391
49150-2756GT	393
49150-7283GT	393
49163-7144GT	455
49176-8638GT	77, 393
49183-13492GT	389, 391
49212GT	425
49214GT	425
49215GT	425
49219GT	389, 391
49364GT	337
49379GT	405
49408GT	255, 405
49519GT	81, 395
49612GT	13, 217, 229
49613GT	217, 229
49816GT	271
49817GT	273

Part no.	Page Number
49915GT	279
49924GT	15, 17, 243, 279, 281, 299
50787GT	271
51063GT	351
52352GT	279
52371GT	235
52475GT	23, 39
52692GT	23, 39
52715GT	221, 225
52865GT	19
52866GT	247, 275, 287, 307, 321, 331
52897GT	235
52943GT	239, 241
52967GT	23, 39
53386GT	55, 85
53952GT	247, 259, 287, 321, 331
53980GT	403
54124GT	87
54205GT	325, 335
54254GT	143
54255GT	121, 141, 143, 151
54324GT	87
54365GT	437
54428GT	243, 285, 303
54437GT	325
54486GT	433
54487GT	315
54578GT	315, 327
54579GT	315
55067GT	381
55753GT	381, 407, 411, 417, 421, 481...
56003GT	391
56424GT	379, 407, 409, 411, 413
56426-700GT	417, 421
56445GT	125
56525GT	411
56570GT	411
56604GT	489
56687GT	165
56704GT	405
56912GT	49, 57, 67, 77, 81, 83...
56934GT	411
58249GT	279
58304GT	101
58380GT	339
58415GT	247, 287, 331
58489GT	81
58566GT	279
58630GT	15, 279
58632GT	255
58994GT	221, 223
59371GT	75
59460GT	49
60304GT	349, 353, 355, 357
60334GT	339
60425GT	133, 135, 137, 143, 147, 151...
60426GT	161
60427GT	161, 187, 473
60428GT	165
60429GT	141, 143, 151
60433GT	117, 119
60435GT	121, 123, 125, 141, 143, 145...
60439GT	131, 139, 141, 143, 149, 151...
60441GT	165, 167, 171, 175, 177, 181...
60443GT	99, 175
60447GT	121, 125
60452GT	151, 163, 167, 171, 177
60459GT	151, 163, 177
60521GT	189
60526GT	121, 125
60527GT	117, 119, 123, 125, 165, 173...
60528GT	117, 119, 123, 125, 169, 173...
60531GT	171
60532GT	171
60585GT	317, 329
60840GT	349, 355, 357
60857GT	13, 339
60984GT	343
61073-2697GT	449
61073-3012GT	449
61073-3330GT	393
61073-3730GT	393
61073-3930GT	393
61074-5710GT	449
61074-7254GT	393
61074-9646GT	449
61189GT	111
61263GT	77, 395, 449
61278GT	445
61283GT	379
61610GT	449
62127GT	237
62337GT	237
62392GT	387
62414GT	81
62420GT	15, 17, 247, 287, 321, 331
62421GT	15, 317
62425GT	15, 17, 275, 307
62433GT	15, 325, 335
62506GT	235
62507GT	235
63375GT	437
63463GT	247, 287, 319, 331
63468GT	61
63727GT	431
65278GT	23, 39
65473GT	327
65630GT	411
65636GT	317, 329
65638GT	317, 329
65810GT	247, 287, 321, 331
65887GT	89, 91
66399GT	13
66472GT	417, 421
66811GT	93
66812GT	93, 383
66813GT	93, 383
66815GT	383
66816GT	93
66817GT	93, 383
66818GT	93
66821GT	93
67504GT	189
67897GT	381
69775GT	243, 285, 303
70317GT	429

Part no.	Page Number
70318GT	429
70319GT	429
70351PGT	247
70367GT	269, 325, 327
70375GT	247
70376GT	247
70381GT	245, 275, 289, 307
70385GT	243, 319
70444GT	271
70445GT	271
70448GT	273
70449GT	271
70452GT	245, 247, 261, 267, 297. 323...
70454GT	277
70455GT	277
70483GT	273
70529GT	435
71259GT	81, 451
71768GT	351
71909GT	89, 91
71911GT	271, 305
72086GT	19, 23, 27, 35, 39, 43
72282GT	405
72290GT	53, 57
72326GT	93
72327GT	269
72343GT	259
72348GT	315
72875GT	31, 411
72999GT	19
73463-1175GT	411
73478GT	379
73575GT	379, 459, 463
73713GT	99
73717GT	95, 121, 125, 385
73720GT	169
73725GT	99
73730GT	95, 121
73736GT	95, 121
73814GT	153
73900GT	377
74006GT	425, 437, 445
74052GT	425
74735GT	53
74902GT	219, 221, 225, 227, 239. 241
74913GT	445
75020GT	335
75064GT	343
75069GT	425
75185GT	405
75278-5029GT	399
75278-5129GT	399
75443GT	387
75444GT	387
75445GT	387
75446GT	387
75447GT	387
75448GT	387
75449GT	387
75450GT	275, 307
75451GT	275, 307
75462GT	237
75617-1025GT	417, 421
75617-1550GT	417, 421
75617-2075GT	419, 423
75617-2275GT	417, 421
75617-3138GT	419
75629GT	165, 167, 171, 175, 177. 181
75631GT	255
75636GT	417, 421
75640GT	137, 143, 145, 161
75654GT	77, 395, 449
75854GT	81, 451
75855GT	81, 451
76695GT	363
77051GT	353, 359
77295GT	17, 259
77303GT	363, 369
77310-1575GT	389, 391
77310-1693GT	389, 391
77402GT	245, 325
77477GT	315, 327
77482GT	327
77483GT	337
77610GT	55
77616GT	349
77618GT	349
77644GT	479
77648GT	359
77649GT	359
77653GT	353
77654PGT	353
77656GT	349, 359
77664GT	411, 413
77671GT	101
77674GT	61, 65, 67
77683GT	411
77688GT	349
77693GT	81
77713GT	351
77736GT	315
77778GT	105, 111
77790GT	55, 61
77791GT	55, 61
77795GT	353
77797GT	417, 421
77879GT	103
77880GT	55
77882GT	351
77884GT	355
77891GT	435
77950GT	57
77990GT	315
77996GT	429
77997GT	429
77998GT	429
78736GT	281, 299, 469
79015GT	189
80543GT	437, 445
81096GT	425
81167GT	429
81175GT	365
81340GT	375
81341GT	373
81342GT	373
81347GT	373

Part no.	Page Number
81368GT	411
81467GT	275, 307
81468GT	275, 307
81488GT	385
81522GT	339
81578GT	77
81599GT	345, 347
81609GT	63
81610GT	63
81691GT	63
81724GT	341
81802GT	419, 423
81812-13292GT	399
81834GT	103
81856GT	351
82161GT	19
82237GT	27, 31
82240GT	35
82366GT	19
82410GT	31, 411
82481GT	35
82487GT	35, 47
82862GT	31
83093GT	107, 109
83098GT	387
83141GT	233
85300GT	411
87033GT	339, 397
87755GT	95, 121, 125, 385
88280GT	365
88331GT	121, 129
88332GT	121, 125, 129
88356-11103GT	153, 155, 347
88356-13103GT	99, 147, 149
88356-13107GT	159, 349
88356-32163GT	157, 351
88377-1400GT	411
88390GT	417, 421
88406GT	441
88451GT	251
88452GT	251
88493GT	435
88516GT	365, 369
88567GT	359
88568GT	359
88606GT	433
88607GT	433
88676GT	343
88756GT	175
88793GT	359
88795GT	353
88796GT	359
88801GT	115, 199
88804GT	115, 209
88831GT	115, 205
88841GT	319
88846GT	319
88847GT	319
88872GT	343
88884GT	53, 57, 65, 67
88887GT	51, 59
88917GT	13
88919GT	345, 351
88936GT	449
88942-4331GT	393
88942-8354GT	393
88942-10827GT	393
88949-3828GT	393, 449
88988GT	323, 335
88989GT	317
88990GT	317, 327
88991GT	319
88992GT	319
88993GT	319
89294GT	49
89295GT	53
89312GT	219, 225
89733GT	217, 219, 223, 225
89737GT	219, 223, 225, 227
89765GT	15
89770GT	219, 225
89771GT	323
89774GT	247
89785GT	283, 301
89953GT	325
89997GT	273
89998GT	273
93500GT	13
94221GT	49
94333GT	55, 61
94374-2430GT	399
94374-6421GT	393
94464-4986GT	399
94465-3650GT	393
94465-5566GT	403
94466-2336GT	399
94499GT	221, 223
94599GT	219, 225
94643GT	77, 397
94652GT	121, 163
94762GT	15, 315, 329
94937GT	99
94981GT	469
94982GT	439
97128GT	99, 347, 349, 351
97232GT	351
97469GT	237
97548GT	27
97579GT	31
97602GT	27
97815GT	31, 47
97865GT	19
99087GT	133, 161, 165, 189
99343GT	129, 137
99344GT	129, 137
99778GT	473
101006GT	249
101140GT	243
101191GT	163, 167, 171
101199-200GT	473, 475
101293GT	81, 395
101490GT	77, 395
101491GT	77, 395, 449
101494GT	77, 395, 449
101525GT	441
101639GT	435

Part no.	Page Number
101640GT	465
101681GT	115, 211
101726GT	87
101932GT	427
101964GT	109
102045GT	277, 311
102074GT	265
102119GT	265
102121GT	263, 327
102126GT	51, 59
102131GT	51, 59, 65, 67
102155GT	53, 57
102157GT	65, 67
102158GT	51, 53, 57, 59, 65, 67
102159GT	53, 57
102162GT	51, 59, 65, 67
102163GT	51, 59
102166GT	65, 67
102167GT	51, 59, 65, 67
102209GT	275
102227GT	275
102237PGT	273
102516GT	51, 59, 65, 67
102528GT	219, 225
102586GT	279
102587GT	279, 281, 299
102590GT	279
102785GT	433
102786PGT	433
102940GT	217, 223
104759GT	235
104804GT	381
105214GT	371
106003GT	315
106033GT	243, 271, 279
106034GT	243, 271, 279
106042GT	343, 345
106073GT	437
106079GT	239, 241
106098GT	53, 57, 65, 67
106099GT	431
106104GT	439
106115GT	115
106117GT	51, 53, 57, 59
106141GT	443
106172GT	243, 315
106204GT	443
106211-300GT	467
106226GT	269, 325, 329
106275GT	441
106495GT	439
106516GT	49
106554GT	115, 207
106555GT	115, 203
106647GT	55, 61
106648GT	55, 61
106780GT	121, 125
106860GT	443
107578GT	55
108538GT	281, 299
108855GT	369
110149GT	245, 327
110183GT	271
110197GT	219, 225
110221GT	49
110304GT	315, 327
110339GT	349
110340GT	359
110406GT	267
110417GT	267
110477GT	265
110650GT	347, 351
110654GT	125
110671GT	379
110899GT	319
111029GT	319
111155GT	71
111445GT	279
111526GT	433
111580GT	481, 485
111634GT	259
111778GT	217, 219, 223, 225
111818GT	89
111819GT	89, 91
114249GT	39
114251GT	35, 43
114252GT	35, 45, 47
114258GT	19, 27
114390GT	19, 27, 31
114416GT	31
114425GT	19
114473GT	47
115048GT	237
119051GT	263
119052GT	261
119053GT	329
119055GT	89
119056GT	133, 135, 137, 143, 147, 151...
119057GT	131, 163, 177, 187, 473
119058GT	141, 143, 151
119060GT	117, 119
119061GT	95, 121, 125, 141, 143, 165...
119062GT	121, 125, 145, 165, 169, 173...
119063GT	123, 161
119064GT	121, 125, 161
119065GT	131, 139, 141, 143, 149, 151...
119066GT	473
119067GT	99, 175
119070GT	141, 151
119085GT	427
119086GT	427
119088GT	427
119089GT	427
119115GT	219, 225
119116GT	217, 223, 225
119139GT	17, 253
119168GT	91
119170GT	89
119219GT	243
119232GT	265
119394GT	291
119403GT	475
119474GT	17, 255
119475GT	251
119477GT	255
119568GT	251

Part no.	Page Number
119619GT	49, 345, 347, 351
119644GT	95
119761GT	157
119824GT	265
119915GT	387
119918GT	89
119965GT	251
120234GT	243
120258GT	247
120259GT	247
121065GT	375
121489GT	405
121582GT	381
121615GT	273
121619GT	115, 191
121622GT	115, 193
121657GT	167, 177
122019GT	405
122073GT	407, 417, 421
122120GT	217, 223, 239, 241
122121GT	239, 241
122148GT	239, 241
122641GT	221, 225
122645GT	217, 223
122647GT	219, 225
122649GT	217, 223
122657GT	219, 225
122661GT	375
122662GT	375
122663GT	375
122668GT	375
125865GT	49
128000GT	387
128001GT	387
128003GT	323
128004GT	243, 275, 289, 307
128022GT	323
128049GT	57
128079GT	465
128165GT	251
128166GT	251, 253
128200GT	383
128203GT	95, 127, 383, 417, 421
128204GT	383
128268GT	367
128322GT	381, 441
128584-SGT	383
128588GT	325
128829GT	271
128896GT	271
128909GT	73
128910GT	71
128911GT	73
128912GT	71
128913GT	71
128914GT	71
128916GT	73
128917GT	73
128918GT	73
128919GT	73
128920GT	73
128921GT	73
128922GT	71
128923GT	71
128924GT	73
128925GT	71
128927GT	73
128928GT	71
128949GT	71
128955GT	73
128984GT	315, 329
128985GT	315, 329
128991GT	315, 327
133067GT	35, 43, 47
133205GT	35
133232GT	19
133238GT	27
133250GT	23
133253GT	29, 45
133254GT	29, 45
133259GT	23, 39
133260GT	23, 39
133263GT	39
133278GT	19
133310GT	19
139000GT	65
139001GT	65
139002GT	65, 67
139140GT	65, 67
139288GT	359
139308GT	101
139309GT	101
139321GT	273
139322GT	271
139323GT	101
139338GT	383
139384GT	359
139385GT	359
139455GT	275
139508GT	229
139512GT	229
139515GT	229
139527GT	229
139528GT	229
139598GT	387
139610GT	263
139715GT	231
139716GT	229
139717GT	229
139718GT	229
139719GT	229, 231
139726GT	231
139727GT	229, 231
139731GT	115, 201
139799GT	233
139965GT	49, 57
139966GT	49, 51, 57, 59
139967GT	49, 51, 57, 59
139968GT	51, 57, 59
139969GT	51, 59
139970GT	51, 59
139971GT	51, 53, 59
139972GT	51, 53, 59, 61
146180GT	81
146181GT	81
146182GT	81

Part no.	Page Number
146376GT	89
146413GT	89
146417GT	89
146478GT	383
147033GT	51, 53, 59, 61
147034GT	51, 53, 59, 61
147121GT	379
147355GT	315, 327
147550GT	233
147792GT	23
147826GT	325
150103GT	163, 167, 171
160517GT	277
160540GT	263
160541GT	261
160687GT	243
160809GT	377
161087GT	245
161533GT	219, 225
161538GT	217, 221
161607GT	103
161611GT	323, 335
161938GT	291, 309
162206GT	297, 313
162207GT	295, 311
162208GT	297, 313
162209GT	295, 311
162216GT	55, 61
162217GT	55, 61
162283GT	303
162284GT	303
214225GT	365
214226GT	365
214228GT	17, 297, 311
214237GT	285
214249GT	473
214446GT	261
214536GT	473
214619GT	441
214620GT	441
214621GT	441
214622GT	441
214623GT	441
214682GT	293
214685GT	285
214686GT	287
214795GT	81
214934GT	291
215254GT	107, 109
215269GT	255
215270GT	255
215271GT	255
215273GT	255
215274GT	17, 255
215275GT	253
215276GT	257
215277GT	257
215278GT	253
215279GT	255
215280GT	251
215281GT	251
215282GT	251
215283GT	251
215284GT	251, 265
215285GT	251, 265
215287GT	17, 251
215288GT	255
215289GT	255
215290GT	255
215291GT	255
215294GT	251
215295GT	251
215298GT	255
215299GT	251
215300GT	253
215301GT	253
215302GT	253
215305GT	253
215307GT	255
215308GT	253
215309GT	253
215310GT	253
215311GT	255
215313GT	255
215314GT	251
215320GT	259
215323GT	265
215340GT	51, 59, 65, 67
215421GT	265
215472GT	331
215526GT	27, 43
215527GT	27
215528GT	263
215642GT	51, 59, 65, 67
215776GT	261
215912GT	331
215917GT	327
216167GT	261, 267
216367GT	259
216372GT	181
216388GT	181
216606GT	475
216607GT	475
216611GT	473
216612GT	473
216615GT	473
216616GT	473
216617GT	475
216618GT	475
216655GT	473
216662GT	473
216676GT	475
216683GT	473
217366GT	441
217820GT	251
217822GT	257
217823GT	253
217877GT	287
217930GT	287
218165GT	383
218448GT	375
218449GT	93
218457GT	385
218458GT	445
218559GT	31
218576GT	259

Part no.	Page Number
218668GT	261
218715GT	291, 309
219437GT	285, 293, 303
219487GT	31
219508GT	465
219956GT	47
219958GT	47
219976GT	287
220229GT	269
220230GT	251, 269
220231GT	251
226388GT	125
226389GT	137
226390GT	137
226393GT	405
226542GT	365, 369
226947GT	137
226948GT	125, 385
227309GT	257
227618GT	113, 139, 379
227785GT	61
227988GT	259
228796GT	373
228797GT	373
228848GT	411
228849GT	411
228969GT	375
229110GT	137, 163, 167, 171, 175. 177...
229169GT	375
229201GT	91
229202GT	89
229203GT	91
229567GT	383
229817GT	65, 67
229818GT	65, 67
229931GT	65, 67
230820GT	329
230849GT	51, 59
231034GT	217, 223
231087GT	331, 489
231513GT	111, 265, 319
231529GT	323, 325
231530GT	233
231532GT	107, 109
231612GT	51, 59
231868GT	445
232874GT	261, 265
233108GT	455
233992GT	411
235659GT	259
236248GT	283, 301
236251GT	283, 291, 301
236259GT	17, 295, 311
236260GT	17, 295, 311
236338GT	267
236339GT	267
236340GT	265
236364GT	269
236373GT	257, 261
236420GT	267
236421GT	265
236422GT	261
236423GT	265
236425GT	265
236799GT	251, 259, 265
236911GT	89
236912GT	89
237068GT	479
237146GT	259
237188GT	287
237189GT	295
237190GT	295
237191GT	295
237192GT	285
237193GT	285
237194GT	285
237234GT	217, 223, 225
237238GT	243, 271, 285, 303
237352GT	309
237385GT	259
237711GT	473
237780GT	265
237830GT	61
237832GT	265, 329
238135GT	105, 111
238330GT	367
238359GT	269
822131GT	27
822224GT	385
822250GT	121, 125
822436GT	165
822438GT	163
822439GT	163
822442GT	165
822445GT	165
822448GT	163
822462GT	163, 167, 171, 175, 177, 181
822463GT	163, 169, 173, 175, 177, 181
822464GT	163, 169, 171, 175, 177, 181
822465GT	163, 167, 171, 175, 177, 181
822466GT	163, 163, 167, 169, 171, 173...
822467GT	163, 167, 171, 175, 179, 183
822468GT	163, 167, 171, 175, 177, 183
822469GT	163, 167, 171, 175, 175. 177...
822514GT	271
822515GT	319
822606GT	291, 309
822692GT	79
822693GT	243
822694GT	285
822695GT	267, 285, 327
822696GT	285
822697GT	327
822698GT	267
822759GT	417, 421
822768GT	417, 421
822769GT	417, 421
822771GT	421
822817GT	435
822871GT	435
823052GT	181
823053GT	181
823074GT	83
823113GT	23, 39
823356GT	87
823368GT	81

Part no.	Page Number
823520GT	405
823523GT	291
823751GT	307
823816GT	257
824025GT	263, 271
824027GT	91, 107, 109, 243, 259, 267...
824028GT	105, 109, 251, 259, 269, 289...
824029GT	87, 89, 105, 109, 259, 267...
824031GT	79
824032GT	469, 473
824037GT	459
824038GT	261, 411, 417, 421
824041GT	63, 243, 271, 325
824059GT	49, 57, 107, 109, 439
824060GT	435
824062GT	351
824063GT	61, 67, 455
824066GT	439, 447
824067GT	49, 349, 355, 369
824068GT	349, 355
824072GT	53, 57
824075GT	365, 369
824077GT	361, 379, 441, 443
824078GT	75, 81, 83, 89, 105, 111...
824079GT	75, 81, 99, 297, 313, 317...
824080GT	81, 91, 325, 333, 465
824081GT	81, 267, 365, 369, 415
824082GT	347, 381
824083GT	81, 353, 373, 411, 459
824084GT	365, 375, 469
824085GT	251, 261, 269, 415
824086GT	247, 275, 287, 319, 333, 407...
824087GT	263, 335, 355, 437, 445
824089GT	83, 101, 271, 341, 343, 351...
824090GT	75, 83, 91, 103, 245, 247...
824091GT	49, 63, 75, 89, 275, 295...
824092GT	99, 267, 291, 363
824093GT	347
824095GT	49
824096GT	373
824110GT	49, 349
824113GT	49, 57, 67, 271, 351, 355...
824115GT	339
824116GT	365, 369
824120GT	267, 285, 303, 315, 329
824123GT	277, 311
824124GT	287, 427
824127GT	49, 349
824129GT	49, 349
824132GT	305, 317, 329
824133GT	291
824134GT	265
824136GT	79
824142GT	245, 275, 307
824144GT	79, 319, 325
824145GT	263, 273, 323, 325
824149GT	415
824151GT	277
824207GT	423
824214GT	95, 385
824215GT	87, 295, 311, 433
824216GT	99, 349, 459
824220GT	259, 269, 285, 287, 303. 315...
824225GT	379
824226GT	95
824227GT	421, 435
824471GT	87
824600GT	291, 309
824615GT	27
824617GT	437
824673GT	283, 299
825019GT	49, 341, 363, 369
825349GT	433
825351GT	245, 275
825352GT	405, 469
825353GT	101, 261, 271, 359, 365. 369
825354GT	79
825355GT	243, 319
825357GT	493
825358GT	67, 351, 381, 441
825708GT	281, 299
825737GT	437
825796GT	49, 351, 359, 363, 369
825939GT	281, 299
826008GT	289, 307
826171GT	103, 261
826214GT	319, 445
826215GT	319, 445
826345GT	19
826379GT	353, 359
826516GT	473
826793GT	347, 349, 355
826795GT	303
826822GT	303
1251496GT	309
1251500GT	83
1251501GT	83
1251502GT	83
1251503GT	83
1251504GT	83
1251505GT	83
1251506GT	83
1251565GT	311, 351, 359, 363, 369, 373
1251600GT	379, 411, 425, 465, 481. 485
1251731GT	293
1251757GT	87, 431, 465
1251814GT	337
1251819GT	327
1251899GT	245, 273, 277
1251983GT	261, 265, 285, 291, 305. 309...
1251997GT	261, 323, 457, 477
1252050GT	259
1252052GT	259
1252940GT	327
1252942GT	327
1252943GT	337
1252978GT	359, 427
1253011GT	27
1253185GT	95, 269, 285, 287, 303, 315...
1253264GT	109
1253271GT	109
1253477GT	83, 95, 385
1253478GT	55, 63, 87, 105, 109, 363...
1253485GT	91, 441, 481, 485
1253487GT	331
1253489GT	425, 445

Part no.	Page Number
1253498GT	55, 57, 77, 233, 261, 289...
1253629GT	19
1253749GT	255
1253795GT	101
1253796GT	101
1253815GT	343
1253819GT	105
1253825GT	77
1253830GT	105, 111
1253831GT	105, 111
1253922GT	291
1253990GT	331
1254017GT	331
1254267GT	291
1254452GT	291
1254453GT	291
1254594GT	281, 299
1254625GT	107, 111
1254639GT	343
1254823GT	291, 309
1254826GT	279
1255385GT	53, 61
1255391GT	373
1255396GT	297, 313
1255399GT	297, 313
1255400GT	297, 313
1255451GT	309
1255452GT	49, 345, 347
1255469GT	245, 261
1255581GT	19, 27, 35, 43
1255582GT	19, 35
1255642GT	67
1255643GT	87
1255653GT	279, 281
1255666GT	245, 261, 275, 289, 307
1255692GT	291
1255699GT	55
1255700GT	53
1255703GT	49, 57
1255704GT	55
1255705GT	49
1255706GT	49
1255708GT	53
1255710GT	53
1255711GT	57
1255714GT	67
1255720GT	99
1255722GT	99
1255726GT	455
1255727GT	455
1255728GT	455
1255730GT	453
1255731GT	453
1255753GT	383
1255756GT	363
1255758GT	271, 363, 365, 373, 417, 421
1255760GT	245, 247, 261, 267, 295, 323...
1255761GT	359
1255763GT	107, 111, 307, 465
1255768GT	101
1255769GT	101
1255770GT	101
1255771GT	101
1255772GT	101
1255773GT	101
1255782GT	359
1255788GT	425
1255802GT	57, 63, 445
1255805GT	85, 101, 107, 111, 247, 275...
1255894GT	287
1255986GT	105
1255987GT	109
1256054GT	107, 109
1256074GT	471
1256107GT	343
1256119GT	349
1256124GT	441
1256126GT	339
1256127GT	105, 111
1256165GT	309
1256168GT	101
1256169GT	277, 311
1256170GT	61, 99
1256177GT	347
1256182GT	53, 61, 99
1256267GT	55, 57, 343
1256283GT	245, 247, 261, 267, 295. 309...
1256312GT	431
1256377GT	457
1256378GT	457
1256379GT	457
1256380GT	457
1256389GT	457
1256400FRGT	457
1256400GT	457
1256425GT	43, 47
1256439GT	457
1256455GT	325
1256463GT	363
1256464GT	259, 351
1256469GT	79
1256481GT	457, 477
1256482GT	313
1256599GT	293
1256679GT	105, 111, 285, 293, 363
1256693GT	105, 109
1256767GT	105
1256771GT	109
1256776GT	247, 277, 295, 311
1256804GT	433
1256837GT	103
1256842GT	103
1256843GT	365, 369
1256846GT	103
1256847GT	365
1256848GT	263
1256851GT	457, 477
1256855	77, 93, 105, 243, 259, 267...
1256855GT	109
1256856GT	105, 109, 429, 457, 477
1256859GT	459
1256863GT	103
1256864GT	343
1257076GT	63, 243, 271
1257078GT	53, 57
1257080GT	343

Part no.	Page Number
1257223GT	103
1257227GT	385, 433, 437
1257231GT	293
1257296GT	425, 445
1257390GT	95, 425
1257410GT	93
1257419GT	63
1257421GT	289, 307
1257424GT	267, 285
1257450GT	259
1257453GT	61
1257464GT	371
1257481GT	261
1257486GT	267
1257489GT	261
1257628GT	105, 109, 265
1257685GT	327
1257705GT	323, 335
1257706GT	273, 325
1257707GT	323
1257733GT	13
1257736GT	331
1257737GT	331
1257776GT	323
1257810GT	323, 335
1257834GT	319
1257836GT	315
1257837GT	245
1257866GT	347
1257867GT	373, 375
1257868GT	455
1257869GT	455
1257961GT	295, 311
1258096GT	181
1258100GT	121
1258174GT	19, 27, 35, 43
1258175GT	19, 35
1258176GT	19, 27, 35, 43
1258177GT	19, 35
1258395GT	373
1258567GT	13
1258641GT	309
1258670GT	437, 445
1258722GT	107, 111
1258723GT	105, 109
1258724GT	105, 109
1258771GT	265, 309
1258824GT	325
1258892GT	359
1258949GT	21, 35
1258950GT	21, 35
1258952GT	385
1259001GT	101
1259002GT	85, 101
1259106GT	371
1259329GT	419, 423
1259338GT	83
1259339GT	83
1259441GT	291, 309
1259583GT	433
1259584GT	433
1259586GT	259
1259654GT	281, 299
1259660GT	283, 301
1259663GT	269
1259855GT	75, 339
1259899GT	281, 299
1260082GT	53, 61
1260084GT	51, 59
1260112GT	75
1260113GT	75
1260116GT	219, 225, 227
1260162GT	107
1260163GT	111
1260174GT	339
1260357GT	281, 299
1260526GT	471
1260892GT	457, 477
1260910GT	457
1261001GT	433
1261018GT	457
1261019GT	457
1261020GT	457
1261021GT	457
1261022GT	457
1261023GT	457
1261024GT	457
1261025GT	457
1261184GT	459, 463
1261236GT	295, 311
1261239GT	295, 311
1261240GT	295, 311
1261241GT	295, 311
1261244GT	107
1261245GT	109
1261250GT	437, 481, 485
1261266GT	107, 111
1261277GT	75, 85, 101, 107, 111, 303...
1261724GT	75, 339, 445
1261795GT	445
1261815GT	189
1261835GT	109
1261836GT	105, 109
1261837GT	107, 111
1261898GT	165
1261920GT	311
1261921GT	303
1261925GT	309
1261926GT	309
1261928GT	309
1262031GT	471
1262210GT	107
1262211GT	109
1262359GT	435
1262484GT	315
1262487GT	15, 17
1262585GT	319
1262678GT	469
1262688GT	343, 345
1262828GT	307
1262829GT	307
1262831GT	303
1262832GT	311
1262833GT	311
1262838GT	303
1262839GT	303

Part no.	Page Number
1262841GT	303
1262842GT	287, 303
1262846GT	435
1262866GT	17, 283, 301
1262867GT	17, 283, 301
1262868GT	281, 299
1262870GT	281, 299
1262871GT	281, 299
1262872GT	281, 299
1262873GT	283, 301
1262874GT	299
1262875GT	281, 299
1262876GT	283, 301
1262877GT	283, 301
1262878GT	283, 301
1262881GT	281, 299
1262883GT	281, 299
1262893GT	283, 299
1262894GT	281, 283, 299
1262895GT	281, 299
1262896GT	281, 299
1262897GT	281, 299
1262899GT	283, 301
1263542GT	35, 43
1263543GT	21, 27
1264229GT	465
1264261GT	99
1264262GT	259
1264483GT	75
1264497GT	465
1264498GT	465
1264499GT	465
1264680GT	99
1264894GT	253
1264934GT	459, 463
1264969GT	81
1265397GT	381
1265862GT	125, 385
1265999GT	105
1266019GT	21
1266159GT	435
1267121GT	21, 27
1267235GT	243
1267237GT	243
1267238GT	245
1267239GT	245
1267746GT	379
1267747GT	381
1267807GT	339
1268010GT	303
1268229GT	339
1268322GT	95
1268327GT	95
1268651GT	95
1268832GT	79
1269051GT	115, 213
1269060GT	115, 211
1269061GT	115, 215
1269086GT	445
1269424GT	363
1269497GT	383
1269498GT	383
1269499GT	387
1269546GT	469
1269641GT	379
1269642GT	363
1269704GT	165, 167, 171, 175, 177, 181
1269714GT	113, 157
1269717GT	113, 159
1269719GT	113, 129
1269720GT	113, 135
1269721GT	113, 133, 417, 421
1269724GT	115, 185
1269729GT	115, 187
1269732GT	113, 127
1269734GT	113, 131
1269735GT	113
1269738GT	81
1270131GT	469
1270141GT	245
1270151GT	103
1270278GT	371
1270309GT	469
1270310GT	469
1270313GT	409
1270314GT	409
1270316GT	409
1270337GT	371
1270570GT	407
1270571GT	407
1270665GT	439, 481, 485
1270810GT	235
1270946GT	233
1270969GT	21, 35
1270970GT	21, 35
1270994GT	409
1271018GT	409
1271019GT	409
1271040GT	409
1271056GT	261
1271058GT	259
1271061GT	409
1271077GT	407
1271078GT	407
1271081GT	95
1271713GT	387
1271770GT	87
1271771GT	89
1271772GT	87
1271773GT	87
1272019GT	17, 91
1272122GT	95, 121, 125, 385
1272123GT	95, 125, 385
1272242GT	21, 35
1272303GT	377, 379
1272304GT	377
1272326GT	471
1272433GT	445
1272624GT	281
1272965GT	287
1272967GT	287
1272976GT	345
1273081GT	287
1273342GT	107
1273343GT	105
1273344GT	111

Part no.	Page Number
1273345GT	111
1273414GT	343
1273589GT	363, 369
1273629GT	493
1273674GT	355, 357
1273706GT	363, 369
1273734GT	365, 371, 379
1273918GT	307
1273919GT	305
1274106GT	99
1274107GT	99
1274108GT	99
1274109GT	101
1274110GT	101
1274111GT	101
1274112GT	101
1274113GT	101
1274114GT	101
1274164GT	95, 385
1274165GT	355, 363, 381
1274166GT	363, 365
1274167GT	77, 107, 111, 355, 381, 413...
1274168GT	95, 385, 459
1274170GT	439
1274172GT	103, 245, 247, 261, 267, 295...
1274315GT	359
1274320GT	271, 359
1274322GT	49, 63, 75, 99, 105, 245...
1274331GT	87
1274336GT	233
1274448GT	113, 125
1274511GT	363
1274613GT	51, 59
1274645GT	417, 421
1274859GT	377, 379
1274870GT	217, 223
1274900GT	291
1274967GT	443
1275087GT	425
1275088GT	379
1275169GT	369
1275248GT	387
1275258GT	387
1275259GT	387
1275937GT	93
1276017GT	349, 355, 357
1276018GT	349, 355
1276019GT	349, 355
1276021GT	349, 355
1276386GT	343
1276396GT	355
1276412GT	75
1276413GT	359
1276424GT	343
1276425GT	345
1276426GT	345
1276427GT	363, 369
1276428GT	343
1276432GT	373
1276437GT	361
1276449GT	373
1276450GT	373
1276451GT	375
1276453GT	351
1276454GT	347
1276455GT	347
1276456GT	343
1276459GT	77
1276464GT	347
1276468GT	351
1276482GT	351
1276484GT	367
1276485GT	395
1276490GT	349
1276491GT	353
1276495GT	345
1276503GT	345
1276504GT	343
1276505GT	343
1276507GT	347
1276508GT	355
1276509GT	355
1276510GT	347
1276511GT	347
1276513GT	351
1276514GT	349
1276519GT	77
1276520GT	373
1276521GT	373
1276672GT	437
1276750GT	229
1276820GT	365
1276822GT	367
1276986GT	437
1277169GT	95
1277205GT	443
1277206GT	443
1277207GT	441
1277208GT	443
1277873GT	459, 463
1277875GT	461
1277876GT	461
1277877GT	459
1277904GT	137
1277905GT	137
1277906GT	137
1277924GT	75, 81, 89, 99, 107, 111...
1277951GT	113, 137
1277952GT	407
1277966GT	407
1277968GT	253
1277969GT	253
1277974GT	281, 299
1278108GT	459
1278111GT	459
1278119GT	459, 463
1278121GT	459
1278124GT	459, 463
1278138GT	459
1278144GT	461
1278336GT	463
1278363GT	461
1278368GT	459, 463
1278416GT	459
1278433GT	459
1278458GT	459

Part no.	Page Number
1278542GT	31, 47, 459, 463
1278567GT	31, 47
1278612GT	385
1278613GT	385
1278629GT	419, 423
1278666GT	355
1278708GT	13
1278709GT	13
1278793GT	409
1278858GT	377
1278859GT	113, 163
1278863GT	113, 161, 217
1278879GT	113, 117
1278912GT	105, 109
1278982GT	31, 47, 461, 463
1279049GT	363, 369
1279050GT	345
1279306GT	365
1279429GT	365
1279465GT	339
1279466GT	339
1279520GT	83
1279521GT	83
1279522GT	83
1279564GT	27
1279568GT	339, 395
1279599GT	167, 177
1279631GT	283
1279653GT	281
1279800GT	431
1279801GT	431
1279851GT	385
1279869GT	445
1279902GT	115, 175
1280080GT	431
1280124GT	365
1280278GT	463
1280390GT	99
1280401GT	83
1280487-SGT	113, 117
1280589GT	95
1280592GT	167, 171
1280819GT	21
1280820GT	21
1280837GT	373
1280838GT	373
1280839GT	373
1280840GT	375
1280841GT	347
1280847GT	113, 167
1280862GT	341
1280871GT	113, 147
1280872GT	113, 153
1280885GT	113, 119
1281149GT	471
1281169GT	21, 35
1281174GT	31, 47
1281175GT	47
1281180GT	21
1281187GT	21, 35
1281188GT	21, 37
1281250GT	235
1281786GT	437
1281789GT	237
1281808GT	77, 79
1281936GT	343
1281963GT	359
1281974GT	105
1282117GT	13, 79
1282119GT	291
1282175GT	233
1282197GT	77
1282361GT	31
1282472GT	383
1282963GT	439
1282993GT	415
1283004GT	63, 271, 471, 481, 485
1283005GT	405, 437
1283007GT	277, 313
1283012GT	95
1283013GT	107
1283015GT	309
1283019GT	493
1283021GT	319
1283022GT	63, 319
1283024GT	79, 365, 369
1283026GT	483, 487
1283103GT	77
1283125GT	327
1283145GT	339
1283168GT	331
1283181GT	329
1283182GT	333
1283279GT	333
1283339GT	115, 177
1283340GT	115, 181
1283345GT	21, 27, 37, 43
1283511GT	53
1283513GT	439, 447
1283516GT	375
1283533GT	57
1283537GT	63
1283538GT	351
1283545GT	77
1283547GT	75
1283548GT	439
1283549GT	451
1283555GT	115, 189
1283560GT	21, 37
1283561GT	21, 37
1283562GT	425
1283563GT	23, 39
1283571GT	255
1283572GT	255
1283573GT	255
1283574GT	255
1283575GT	255
1283576GT	395
1283577GT	27, 43
1283744GT	29, 45
1283776GT	13
1283783GT	57, 67
1283785GT	53, 65
1283843GT	439
1283847GT	53
1283878GT	21, 31, 37, 47

Part no.	Page Number
1283880GT	423
1284023GT	233
1284093GT	359
1284096GT	23, 39
1284097GT	23, 39
1284098GT	47
1284099GT	47
1284100GT	29, 45
1284101GT	23, 39
1284102GT	29, 45
1284103GT	47
1284272GT	433
1284310GT	445
1284399GT	237
1284523GT	95
1284524GT	385
1284548GT	329
1284549GT	329
1284672GT	31
1284717GT	31
1284718GT	31
1284724GT	145
1284956GT	181
1284964GT	181
1284966GT	181
1284969GT	181
1284981GT	21
1284982GT	37
1285141GT	237
1285142GT	237
1285143GT	237
1285144GT	237
1285145GT	237
1285146GT	237
1285147GT	237
1285150GT	437
1285151GT	437
1285152GT	437
1285153GT	437
1285222GT	335
1285224GT	335
1285508GT	437
1285583GT	167
1285719GT	477
1285721GT	477
1285730GT	477
1285850GT	459
1286171GT	365
1286259GT	477
1286260GT	477
1286261GT	477
1286262GT	477
1286263GT	477
1286362GT	37, 43
1286372GT	55, 61
1286393GT	477
1286395GT	83
1286546GT	333
1286577GT	23, 39
1286578GT	29, 45
1286579GT	29, 45
1286594GT	83
1286618GT	477
1286620GT	477
1286621GT	477
1286637GT	21, 35
1286638GT	21, 35
1286640GT	95
1287081GT	445
1287116GT	331
1287139GT	333
1287140GT	333
1287242GT	71
1287485GT	217
1287489GT	23, 39
1287490GT	431
1287506GT	53
1287507GT	403
1287508GT	427
1287509GT	427
1287510GT	427
1287511GT	427
1287515GT	23, 39
1287590GT	23, 39
1287591GT	29, 45
1287592GT	25, 39
1287593GT	29, 45
1287594GT	25, 39
1287598GT	21, 37
1287599GT	21, 37
1287629GT	113, 141
1287630GT	113, 145
1287631GT	113, 151
1288327GT	27
1288367GT	425
1288372GT	63
1288373GT	63
1288375GT	221
1288376GT	219, 221, 227
1288377GT	219, 221, 223, 227
1288378GT	221
1288379GT	219, 223, 227
1288380GT	219, 227
1288381GT	217, 223
1288382GT	221, 225
1288386GT	367
1288398GT	63
1288400GT	223
1288402GT	431
1288403GT	55, 61
1288405GT	55, 61
1288455GT	441
1288795GT	95
1288801GT	477
1288803GT	477
1288805GT	477
1288890-9948GT	403
1288890-10630GT	389, 391
1288891-7874GT	449
1288891-8268GT	393
1288892-6102GT	389, 391
1288893-70866GT	389, 391
1288893-72639GT	389, 391
1288893-73039GT	389
1288984GT	83
1289103GT	279

Part no.	Page Number
1289514GT	25, 39
1289520GT	75, 471
1289521GT	75, 471
1289522GT	471
1289523GT	471
1289531GT	381
1289535GT	465
1289536GT	465
1289552GT	379
1289561GT	75, 471
1289592GT	121
1289609GT	465
1289610GT	465
1289611GT	465
1289692GT	477
1289693GT	477
1289767GT	465
1289823GT	467
1289837GT	467
1289851GT	465
1289852GT	467
1289895GT	281
1290107GT	465
1290424GT	441
1290450GT	93
1290459GT	93
1290460GT	93
1290501GT	113, 121
1290553GT	219, 221, 223, 227
1290561GT	219, 225
1290849GT	465
1291159GT	431
1291202GT	89
1291205GT	15, 331
1291342GT	91
1291410GT	115, 195
1291411GT	115, 197
1291495GT	407
1291496GT	407
1291573GT	465
1291798GT	481
1291799GT	481
1291800GT	481
1291801GT	483
1291802GT	481, 485
1291803GT	483, 487
1291804GT	483, 485
1291806GT	483, 487
1291807GT	483
1291809GT	483, 487
1291811GT	481, 485
1291812GT	481, 485
1291813GT	483, 487
1291815GT	481, 485
1291817GT	481, 485
1291818GT	483, 487
1291819GT	483, 485
1291821GT	483, 487
1291844GT	483, 485
1291865GT	481, 485
1292198GT	471
1292346GT	471
1292828GT	483, 487
1292932GT	481, 485
1292936GT	481
1292937GT	481
1292937PGT	481
1292956GT	481
1293596GT	25, 39
1293599GT	25, 41
1293601GT	25, 41
1293602GT	25, 41
1293606GT	25, 41
1293609GT	25, 41
1293616GT	31, 47
1293617GT	31, 47
1293700GT	485
1293702GT	485
1293703GT	485
1293704GT	487
1293706GT	483, 485
1293710GT	485
1294289GT	471
1294340GT	37
1294541GT	113, 143
1294547GT	113, 171
1294563GT	113, 155
1294573GT	113, 149
1294827GT	267
1295163GT	29, 45
1295164GT	29, 45
1295318GT	29, 45
1295319GT	29, 45
1295320GT	29, 45
1295321GT	29, 45
1295334GT	245, 247, 261, 267, 295. 323...
1296077GT	381
1296522GT	31
1296524GT	47
1296591GT	439
1296816GT	365, 373
1296817GT	365, 373
1296895GT	493
1296897GT	493
1296971GT	429
1297346GT	331
1298841GT	413
1298850GT	413
1298933GT	13
1299220GT	413
1300536GT	255
1300832GT	493
1302966GT	95
1303389GT	241
1303390GT	239
1303581GT	75
1303585GT	479
1304649GT	105
1305366GT	397
1306899GT	463
1306900GT	463
1307644GT	463
1307645GT	463
1307726GT	363, 369
1307739GT	463
1308384GT	463

Part no.	Page Number
1310064GT	463
1310066GT	463
1310157GT	61, 63
1310378GT	445
1310379GT	425
1310898GT	489
1310910-975GT	489
1310911-950GT	489
1311043GT	425
1311053GT	439, 447
1312271GT	441
1312547GT	443
1313038GT	251
1313039GT	251
1313040GT	251
1313118GT	489
1313693GT	71
1313694GT	71
1313695GT	71
1313696GT	71
1313697GT	71
1313698GT	71
1313699GT	71
1313700GT	71
1313701GT	71
1313702GT	71
1313703GT	71
1313704GT	71
1313705GT	71
1313706GT	71
1313707GT	71
1313708GT	71
1313709GT	71
1314181GT	239, 241
1314182GT	239, 241
1314183GT	239, 241
1314493GT	229
1314554GT	239, 241
1314555GT	239, 241
1314556GT	239, 241
1315359GT	491
1315824GT	101
1316333GT	491
1316635GT	87
1316867GT	79
1316958GT	79
1317967GT	79
1318185GT	491
1322810GT	413
1323412GT	39
1323451GT	23
1323454GT	25, 39
1323455GT	23, 39
1327902GT	63
T106954GT	99
T106955GT	99
T106957GT	99
T106961GT	99
T106962GT	99
T110954GT	137
T110955GT	137
T112536GT	137
T112560GT	425
T112561GT	425
T112626GT	387
T112773GT	33, 47

Part no.	Page Number

California Proposition 65

WARNING

Operating, servicing and maintaining this equipment, passenger vehicle or off-highway motor vehicle can expose you to chemicals including engine exhaust, carbon monoxide, phthalates, and lead, which are known to the State of California to cause cancer and birth defects or other reproductive harm. These chemicals can be emitted from or contained in other various parts and systems, fluids and some component wear by-products. To minimize exposure, avoid breathing exhaust, do not idle the engine except as necessary, service your equipment and vehicle in a well-ventilated area and wear gloves or wash your hands frequently when servicing your equipment or vehicle and after operation. For more information go to www.P65Warnings.ca.gov/passenger-vehicle.

Breathing diesel engine exhaust exposes you to chemicals known to the State of California to cause cancer and birth defects or other reproductive harm.

- Always start and operate the engine in a well-ventilated area.
- If in an enclosed area, vent the exhaust to the outside.
- Do not modify or tamper with the exhaust system.
- Do not idle the engine except as necessary.

For more information go to www.P65warnings.ca.gov/diesel.

Distributed By: